EXTERIOR FRAMING

05400

ROAD
CLOSED

2006

TABLE OF CONTENTS

Product Identification 5

General Product Information . . . . . 4 - 5

Compliance Guaranteed. 4

Material Specifications. 5

Technical Assistance 5

Thickness— Steel Components 5

Design Stiffening Lip Length 5

General Notes for all Tables. 5

Definitions of Symbols. 6

Physical Properties. 7

Physical Properties Table Notes 12

Structural Stud Physical Properties. . . . . 7 - 12

Structural Track Physical Properties . . . . . 13 - 16

Limiting Wall Height Tables 17

Limiting Wall Heights Structural. 17- 19

Curtain Wall Construction Details . . . . . 20 - 21

Axial Load Tables . . . . . 22 - 31

Allowable Axial Load Table Notes 31

Allowable Axial Loads . . . . . 22 - 31

Construction Details 32

Web Crippling Load Tables . . . . . 33 - 35

Web Crippling Load Table Notes. . . . . 34 - 35

Allowable Web Crippling Loads— Single Members 34

Allowable Web Crippling Loads— Back-to-Back Members . 35

Floor Joist Span Tables . . . . . 36 - 42

Allowable Floor Joist Span Table Notes 42

Header Data Tables . . . . . 43 - 44

Head of Wall Deflection System. . . . . 45 - 46

True Action Slotted Track. 45

Section Properties. 46

Floor Assembly Details . . . . . 47 - 48

Ceiling Span Tables. 49-50

Deflection Limit L/240. 49

Deflection Limit L/360. 50

Bridging - Bracing . . . . . 51 - 52

CRC Cold Rolled Channel. 51

Connectors. 52

Fastening Systems . . . . . 53 - 54

Allowable Capacities. 53

Allowable Working Values. 54

Accessories . . . . . 55 - 57

Architectural Specification 58

COMPLIANCE IS GUARANTEED

When you use Telling™ Industries, you are using the most up-to-date code compliant framing products available in the World.

International Code Council

2006, 2009 & 2012 International Building Code Compliant

- ICC-ESR 3016
- ICC-ESR 2281 (2006 IBC)
  - ICC-ES Certified
  - Internationally recognized

- Verified by ICC Certified Inspectors at all facilities
  - Cambridge, Ohio
  - Osceola, Arkansas
  - Kingman, Arizona

ASTM International

Telling meets or exceeds all applicable ASTM Framing Standards.

- A 1003
  - Standard Specification for Steel Sheet, Carbon, Metallic- and Nonmetallic-Coated for Cold-Formed Framing Members
- A 653
  - Standard Specification for Steel Sheet, Zinc-Coated (Galvanized) or Zinc-Iron Alloy- Coated (Galvannealed) by the Hot-Dip Process
- C 645
  - Standard Specification for Nonstructural Steel Framing Members
- C 754
  - Standard Specification for Installation of Steel Framing Members to Receive Screw-Attached Gypsum Panel Products
- C 955
  - Standard Specification for Load-Bearing (Transverse and Axial) Steel Studs, Runners (Tracks), and Bracing or Bridging for Screw Application of Gypsum Panel Products and Metal Plaster Bases
- C 1007
  - Standard Specification for Installation of Load Bearing (Transverse and Axial) Steel Studs and Related Accessories

---

Industry Affiliations

- USGBC: Telling is an active Member of The United States Green Building Council
- Many More: SFA, AWCI, AISI, ASTM and LGSEA

ICC ES™ CSSA Certified Steel Stud Association Steel Steel Framing Alliance®

PRODUCT IDENTIFICATION

SECTION PROPERTIES

PRODUCT IDENTIFICATION

All Telling Industries products contain a four part identification code. This identifies the size (both depth and flange/leg height), style, and material thickness of each member.

EXAMPLE:

WEB DEPTH:
(Example: 6" = 600 x 1/100 inches) All member depths are taken in 1/100 inches. For all "T" sections member depths is the inside to inside dimension.

MATERIAL THICKNESS:
(Example: 0.054 in. = 54 mils = 16 gauge; 1 mil = 1/1000 in.) Material thickness is the minimum base metal thickness in mils. Minimum base metal thickness represents 95% of the design thickness.

600 S 162 - 54

STYLE:
(Example: Stud or Joist section = S)
The two alpha characters utilized by the identification code are:
S= Stud or Joist Sections
T= Track Sections

FLANGE/LEG HEIGHT:
(Example: 1 5/8" = 1.625" ~ 162 x 1/100 inches)
All flange widths are taken in 1/100 inches.

Note: For those sections where two different yield strengths (33 ksi and 50 ksi) are shown, the yield strength used in the design, if greater than 33 ksi, should be identified on the design and ordering of steel. (i.e., 600S162-54(50 ksi)

THICKNESS - STEEL COMPONENTS

Minimum Thickness[1] (mils)	Design Thickness (in)	Inside Corner Radii (in)	Reference Only Gauge No.	Color Coding
33	0.0346	0.0764	20 - Structural	White
43	0.0451	0.0712	18	Yellow
54	0.0566	0.0849	16	Green
68	0.0713	0.1069	14	Orange
97	0.1017	0.1525	12	Red

DESIGN STIFFENING LIP LENGTH

Section	Flange Width	Design Stiffening Lip Length (in)
S137	1 3/8"	0.375
S162	1 5/8"	0.5
S200	2"	0.625
S250	2 1/2"	0.625
S300	3"	0.75

1Minimum Thickness represents 95% of the design thickness and is the minimum acceptable thickness delivered to the job site based on Section A2.4 of AISI S100-07.

GENERAL PRODUCT INFORMATION

RAW MATERIAL INFORMATION

All Telling Industries products are formed from steel with a minimum yield strength of 33 or 50 KSI (1000 lbs per square inch). All products contained in this brochure are engineered to meet the 2007 Edition of the AISI (American Iron and Steel Institute) North American Specification for the Design of Cold- Formed Steel Structural Members (AISI S100-2007). The same document was used to calculate the physical and structural properties of all products listed herein via allowable stress design criteria.

TECHNICAL ASSISTANCE

Technical assistance is available to Telling Industries customers when requested. A Telling Industries representative or design professional can review project specific load conditions and determine deflection criteria and lateral bracing conditions not discussed herein. Further, our representatives can assist purchasers and designers in economical applications for maximum efficiency.

All information contained in this brochure is intended as a general guide for using Telling Industries' products. This information should be used as a general guide only and all designs should be completed by a qualified design professional experienced with cold-form steel design. Such an assessment is necessary to verify the suitability of a particular product for use in any load bearing application. Telling Industries assume no liability for failure resulting from the use or misapplications of any information contained herein. Detail drawings contained herein are for information only. Telling Industries reserve the right to make modifications, changes, additions or deletions to the information on any of our products without prior notice or obligation. For the latest product information or to verify availability, contact a Telling Industries representative. This brochure contains the latest information available at the time of printing.

GENERAL NOTES FOR ALL TABLES

1. Where 'NASPEC' is referenced, it is the "North American Specification for the Design of Cold-Formed Steel Structural Members", 2007 edition (AISI S100-2007).

2. The strength increase from cold work of forming has been incorporated for flexural strength per NASPEC A7.2.

3. Various sections may be manufactured with yield points of 33 or 50 ksi. The yield point used for calculations is indicated in the tables.

4. For sections available in both 33 and 50 ksi, the specifier must clearly indicate which yield point is required. For example: 362S162-54 (50).

5. When provided, factory punchouts will be located along the centerline of the webs of the members and will have a minimum center-to-center spacing of 24 inches. Punchouts for members > 2.5 inches deep are a maximum of 1.5 inches wide x 4 inches long. Members with depths 2.5" and smaller are maximum 3/4" wide x 4 inches long.

DEFINITIONS OF STRUCTURAL PROPERTY SYMBOLS

GROSS PROPERTIES

Ixx: Moment of inertia of the gross section about the X-X axis (strong axis).
Rx: Radius of gyration of the gross section about the X-X axis.
Iyy: Moment of inertia of the gross section about the Y-Y axis (weak axis).
Ry: Radius of gyration of the gross section about the Y-Y axis.
Sxx: Section modulus of the gross section about the X-X axis (strong axis)

EFFECTIVE PROPERTIES

Ixx: Effective Moment of inertia about the X-X axis (strong axis). See Notes 4 and 5 above.
Sxx: EffectiveSection modulus about the X-X axis (strong axis).
Ma-L: Allowable moment at yield, based on local buckling.
Ma-D: Allowable moment based on distortional buckling (NASPEC C3.1.4(b)).
Kfc: Critical value of rotational stiffness, kf, where allowable distortional buckling moment equals allowable local buckling moment.
Vag: Allowable strong axis shear away from punchouts, per NASPEC C3.2.1.
VaNet: Allowable strong axis shear at a punchout, per NASPEC C3.2.2.

TORSIONAL PROPERTIES

J: St. Venant Torsional Constant.
Cw: Torsional warping constant.
Xo: Distance from the shear center to the centroid along the principal X-axis.
Ro: Polar radius of gyration about the centroid principal axis.
ß: 1- (Xo/Ro)2
Lu: The longest weak axis (Ly) and torsional (Lt) unbraced length at which lateral-torsional buckling is restrained in accordance with NASPEC C3.1.2.1.
m: Distance from shear center to the mid-plane of the web.

SECTION PROPERTIES TABLE NOTES

1. Web depth for track sections equals nominal depth plus 2 x design thickness plus bend radius.
2. Hems on non-structural track sections are ignored.
3. Effective properties include the strength increase from cold-work of forming per NASPEC section A7.2 where applicable. Where Allowable Moment, Ma is followed by '*', a stress increase from cold-work of forming has been applied.
4. For deflection determination, use the effective moment of inertia. Effective moment of inertia is based on Procedure 1 of the NASPEC.
5. The effective moment of inertia for deflection is calculated at a stress which results in a section modulus such that the stress times the section modulus at that stress is equal to the allowable local buckling moment.
6. Tabulated gross properties are based on the full, unreduced section away from punchouts.
7. Effective properties of all 'S' sections based on punched sections. Track sections are considered unpunched.
8. For sections with properties listed for both 33 ksi and 50 ksi yield point, the required yield point should be specified in the design documents.
9. Where effective properties are not listed for a section at 33 or 50 ksi yield, web depth-to-thickness or flange width-to-thickness limits from the NASPEC are exceeded. Only gross properties are available.
10. Where section designations include a superscript '1', web height-to-thickness exceeds 200. Web stiffeners are required at all supports and concentrated loads.

SECTION PROPERTIES

Structural Stud Section Properties

			Gross Properties						Effective Properties							Torsional Properties						
Section	Design Thickness (in)	Fy (Yield) (ksi)	Area (in2)	Weight (lb/ft)	Ixx (in4)	Rx (in)	Iyy (in4)	Ry (in)	Ixx (in4)	Sxx (in3)	Ma-L (in-k)	Ma-D (in-k)	$K_{\Phi c}$ (in-lb/in)	Vag (lb)	VaNet (lb)	Jx1000 (in4)	Cw (in6)	Xo (in)	m (in)	Ro (in)	b	Lu (in)
250S137-33	0.0346	33	0.197	0.67	0.203	1.015	0.052	0.515	0.203	0.158	3.11	3.09	6.7	975	399	0.079	0.076	-1.141	0.677	1.612	0.499	35.6
250S137-43	0.0451	33	0.255	0.87	0.261	1.010	0.067	0.511	0.261	0.205	4.53	4.60	0.0	1265	394	0.173	0.096	-1.129	0.670	1.599	0.501	33.6
250S137-54	0.0566	33	0.316	1.07	0.318	1.004	0.080	0.504	0.318	0.255	5.76	5.76	0.0	1553	373	0.337	0.115	-1.115	0.663	1.583	0.504	33.4
250S137-54	0.0566	50	0.316	1.07	0.318	1.004	0.080	0.504	0.318	0.244	8.22	8.34	0.0	2353	565	0.337	0.115	-1.115	0.663	1.583	0.504	27.1
250S137-68	0.0713	33	0.390	1.33	0.386	0.994	0.095	0.495	0.386	0.309	7.19	7.19	0.0	1891	342	0.661	0.138	-1.096	0.653	1.561	0.507	33.1
250S137-68	0.0713	50	0.390	1.33	0.386	0.994	0.095	0.495	0.386	0.308	10.65	10.67	0.0	2866	519	0.661	0.138	-1.096	0.653	1.561	0.507	26.8
250S137-97	0.1017	33	0.533	1.81	0.506	0.975	0.120	0.475	0.506	0.405	10.01	10.01	0.0	2506	283	1.839	0.176	-1.057	0.633	1.514	0.513	33.1
250S137-97	0.1017	50	0.533	1.81	0.506	0.975	0.120	0.475	0.506	0.405	14.75	14.75	0.0	3798	429	1.839	0.176	-1.057	0.633	1.514	0.513	26.5
250S162-33	0.0346	33	0.223	0.76	0.235	1.027	0.087	0.624	0.235	0.180	3.55	3.56	0.0	975	399	0.089	0.146	-1.470	0.859	1.898	0.401	44.1
250S162-43	0.0451	33	0.289	0.98	0.302	1.022	0.111	0.620	0.302	0.240	5.22	5.25	0.0	1265	394	0.196	0.184	-1.457	0.852	1.885	0.402	42.1
250S162-54	0.0566	33	0.358	1.22	0.370	1.016	0.135	0.613	0.370	0.296	6.57	6.57	0.0	1553	373	0.383	0.223	-1.443	0.845	1.868	0.403	41.8
250S162-54	0.0566	50	0.358	1.22	0.370	1.016	0.135	0.613	0.370	0.284	9.42	9.46	0.0	2353	565	0.383	0.223	-1.443	0.845	1.868	0.403	33.9
250S162-68	0.0713	33	0.443	1.51	0.450	1.007	0.162	0.605	0.450	0.360	8.21	8.21	0.0	1891	342	0.752	0.268	-1.424	0.835	1.846	0.405	41.7
250S162-68	0.0713	50	0.443	1.51	0.450	1.007	0.162	0.605	0.450	0.357	12.11	12.21	0.0	2866	519	0.752	0.268	-1.424	0.835	1.846	0.405	33.7
250S162-97	0.1017	33	0.610	2.07	0.596	0.989	0.209	0.586	0.596	0.477	11.45	11.45	0.0	2506	283	2.102	0.346	-1.386	0.815	1.801	0.408	41.9
250S162-97	0.1017	50	0.610	2.07	0.596	0.989	0.209	0.586	0.596	0.477	16.93	16.93	0.0	3798	429	2.102	0.346	-1.386	0.815	1.801	0.408	33.5
250S200-33	0.0346	33	0.258	0.88	0.279	1.040	0.154	0.773	0.265	0.182	5.44	5.41	3.8	1260	515	0.103	0.302	-1.926	1.108	2.321	0.312	45.3
250S200-43	0.0451	33	0.334	1.14	0.358	1.036	0.198	0.769	0.358	0.252	7.56	7.64	0.0	1917	597	0.227	0.382	-1.914	1.101	2.308	0.312	45.3
250S200-54	0.0566	33	0.415	1.41	0.440	1.030	0.241	0.763	0.440	0.352	7.65	7.65	0.0	1553	373	0.443	0.464	-1.899	1.093	2.291	0.313	53.7
250S200-54	0.0566	50	0.415	1.41	0.440	1.030	0.241	0.763	0.440	0.321	9.60	10.11	0.0	2353	565	0.443	0.464	-1.899	1.093	2.291	0.313	45.5
250S200-68	0.0713	33	0.515	1.75	0.537	1.022	0.293	0.754	0.537	0.430	9.57	9.57	0.0	1891	342	0.872	0.561	-1.881	1.084	2.270	0.313	53.7
250S200-68	0.0713	50	0.515	1.75	0.537	1.022	0.293	0.754	0.537	0.417	13.84	14.27	0.0	2866	519	0.872	0.561	-1.881	1.084	2.270	0.313	43.4
250S200-97	0.1017	33	0.711	2.42	0.718	1.005	0.386	0.736	0.718	0.575	13.36	13.36	0.0	2506	283	2.452	0.735	-1.843	1.063	2.224	0.314	54.2
250S200-97	0.1017	50	0.711	2.42	0.718	1.005	0.386	0.736	0.718	0.575	19.82	19.82	0.0	3798	429	2.452	0.735	-1.843	1.063	2.224	0.314	43.4
250S250-43	0.0451	33	0.379	1.29	0.426	1.060	0.336	0.941	0.426	0.297	5.87	6.24	0.0	1265	394	0.257	0.638	-2.404	1.359	2.791	0.258	66.8
250S250-54	0.0566	33	0.471	1.60	0.524	1.055	0.412	0.935	0.524	0.379	7.49	8.22	0.0	1553	373	0.503	0.778	-2.389	1.351	2.774	0.258	67.3
250S250-54	0.0566	50	0.471	1.60	0.524	1.055	0.412	0.935	0.521	0.341	10.22	11.02	0.0	2353	565	0.503	0.778	-2.389	1.351	2.774	0.258	54.1
250S250-68	0.0713	33	0.586	1.99	0.643	1.047	0.503	0.926	0.643	0.495	10.79	11.19	0.0	1891	342	0.993	0.944	-2.371	1.341	2.752	0.258	64.6
250S250-68	0.0713	50	0.586	1.99	0.643	1.047	0.503	0.926	0.643	0.446	13.35	14.59	0.0	2866	519	0.993	0.944	-2.371	1.341	2.752	0.258	54.5
250S250-97	0.1017	33	0.813	2.77	0.864	1.031	0.670	0.908	0.864	0.690	15.60	15.62	0.0	2506	283	2.803	1.245	-2.332	1.320	2.707	0.258	65.6
250S250-97	0.1017	50	0.813	2.77	0.864	1.031	0.670	0.908	0.864	0.663	22.31	23.26	0.0	3798	429	2.803	1.245	-2.332	1.320	2.707	0.258	52.4
350S137-33	0.0346	33	0.232	0.79	0.441	1.380	0.059	0.503	0.441	0.223	4.41	4.54	0.0	1024	487	0.093	0.153	-1.016	0.621	1.786	0.676	34.8
350S137-43	0.0451	33	0.300	1.02	0.568	1.375	0.075	0.498	0.568	0.307	6.07	6.38	0.0	1739	631	0.204	0.193	-1.005	0.615	1.774	0.679	34.7
350S137-54	0.0566	33	0.372	1.27	0.696	1.367	0.090	0.492	0.696	0.385	7.61	7.86	0.0	2253	633	0.398	0.233	-0.991	0.607	1.759	0.683	34.7
350S137-54	0.0566	50	0.372	1.27	0.696	1.367	0.090	0.492	0.696	0.366	10.95	11.42	0.0	3372	947	0.398	0.233	-0.991	0.607	1.759	0.683	28.0
350S137-68	0.0713	33	0.461	1.57	0.849	1.357	0.107	0.482	0.849	0.474	11.04	11.31	0.0	2774	592	0.782	0.280	-0.973	0.598	1.738	0.687	31.8
350S137-68	0.0713	50	0.461	1.57	0.849	1.357	0.107	0.482	0.849	0.472	14.12	14.53	0.0	4202	897	0.782	0.280	-0.973	0.598	1.738	0.687	27.9
350S137-97	0.1017	33	0.635	2.16	1.130	1.334	0.136	0.462	1.130	0.629	15.54	15.95	0.0	3765	511	2.189	0.361	-0.935	0.579	1.693	0.695	31.1
350S137-97	0.1017	50	0.635	2.16	1.130	1.334	0.136	0.462	1.130	0.629	22.90	23.49	0.0	5704	775	2.189	0.361	-0.935	0.579	1.693	0.695	25.2
350S162-33	0.0346	33	0.258	0.88	0.508	1.404	0.098	0.617	0.508	0.257	5.08	5.22	0.0	1024	487	0.103	0.277	-1.324	0.796	2.026	0.573	42.7
350S162-43	0.0451	33	0.334	1.14	0.654	1.400	0.125	0.612	0.654	0.357	7.05	7.31	0.0	1739	631	0.227	0.350	-1.312	0.789	2.014	0.575	42.6
350S162-54	0.0566	33	0.415	1.41	0.804	1.392	0.152	0.606	0.804	0.447	8.83	9.08	0.0	2253	633	0.443	0.426	-1.298	0.782	1.998	0.578	42.7
350S162-54	0.0566	50	0.415	1.41	0.804	1.392	0.152	0.606	0.804	0.426	12.74	13.05	0.0	3372	947	0.443	0.426	-1.298	0.782	1.998	0.578	34.5
350S162-68	0.0713	33	0.515	1.75	0.985	1.383	0.184	0.597	0.985	0.551	12.56	12.83	0.0	2774	592	0.872	0.514	-1.280	0.772	1.977	0.581	39.7
350S162-68	0.0713	50	0.515	1.75	0.985	1.383	0.184	0.597	0.985	0.549	16.44	16.84	0.0	4202	897	0.872	0.514	-1.280	0.772	1.977	0.581	34.5
350S162-97	0.1017	33	0.711	2.42	1.320	1.362	0.238	0.578	1.320	0.738	17.71	18.11	0.0	3765	511	2.452	0.672	-1.242	0.752	1.932	0.587	39.1
350S162-97	0.1017	50	0.711	2.42	1.320	1.362	0.238	0.578	1.320	0.738	26.18	26.76	0.0	5704	775	2.452	0.672	-1.242	0.752	1.932	0.587	31.7
350S200-33	0.0346	33	0.292	0.99	0.598	1.431	0.175	0.773	0.597	0.283	5.59	5.95	0.0	1024	487	0.117	0.541	-1.760	1.039	2.396	0.461	53.7
350S200-43	0.0451	33	0.379	1.29	0.771	1.426	0.224	0.768	0.771	0.410	8.09	8.36	0.0	1739	631	0.257	0.687	-1.748	1.032	2.383	0.462	53.7
350S200-54	0.0566	33	0.471	1.60	0.950	1.420	0.274	0.762	0.950	0.530	10.47	10.73	0.0	2253	633	0.503	0.838	-1.733	1.024	2.367	0.464	53.8
350S200-54	0.0566	50	0.471	1.60	0.950	1.420	0.274	0.762	0.950	0.470	14.07	14.86	0.0	3372	947	0.503	0.838	-1.733	1.024	2.367	0.464	43.5
350S200-68	0.0713	33	0.586	1.99	1.167	1.411	0.333	0.754	1.167	0.655	14.58	14.84	0.0	2774	592	0.993	1.018	-1.715	1.014	2.345	0.465	50.8
350S200-68	0.0713	50	0.586	1.99	1.167	1.411	0.333	0.754	1.167	0.638	19.10	19.68	0.0	4202	897	0.993	1.018	-1.715	1.014	2.345	0.465	43.5
350S200-97	0.1017	33	0.813	2.77	1.576	1.393	0.440	0.736	1.576	0.884	20.57	20.95	0.0	3765	511	2.803	1.347	-1.676	0.994	2.300	0.469	50.3
350S200-97	0.1017	50	0.813	2.77	1.576	1.393	0.440	0.736	1.576	0.884	30.51	31.08	0.0	5704	775	2.803	1.347	-1.676	0.994	2.300	0.469	40.7
350S250-33	0.0346	33	0.327	1.11	0.702	1.466	0.296	0.951								0.130	0.904	-2.232	1.293	2.834	0.380	
350S250-43	0.0451	33	0.424	1.44	0.906	1.461	0.380	0.946	0.906	0.431	8.52	9.00	0.0	1739	631	0.288	1.151	-2.220	1.286	2.821	0.381	64.3
350S250-54	0.0566	33	0.528	1.80	1.118	1.455	0.467	0.940	1.118	0.559	11.04	11.98	0.0	2253	633	0.564	1.409	-2.205	1.278	2.804	0.382	64.5
350S250-54	0.0566	50	0.528	1.80	1.118	1.455	0.467	0.940	1.113	0.494	14.78	15.92	0.0	3372	947	0.564	1.409	-2.205	1.278	2.804	0.382	52.1
350S250-68	0.0713	33	0.657	2.24	1.376	1.447	0.570	0.931	1.376	0.739	16.10	16.99	0.0	2774	592	1.114	1.718	-2.186	1.268	2.782	0.383	61.6
350S250-68	0.0713	50	0.657	2.24	1.376	1.447	0.570	0.931	1.376	0.661	19.78	21.31	0.0	4202	897	1.114	1.718	-2.186	1.268	2.782	0.383	52.2
350S250-97	0.1017	33	0.915	3.11	1.870	1.430	0.762	0.913	1.870	1.050	23.72	24.14	0.0	3765	511	3.154	2.291	-2.147	1.248	2.736	0.384	61.4
350S250-97	0.1017	50	0.915	3.11	1.870	1.430	0.762	0.913	1.870	0.998	33.58	35.43	0.0	5704	775	3.154	2.291	-2.147	1.248	2.736	0.384	49.5
350S300-54	0.0566	33	0.585	1.99	1.286	1.483	0.724	1.113	1.279	0.582	11.51	12.73	0.0	2253	633	0.624	2.166	-2.682	1.531	3.261	0.323	74.7
350S300-54	0.0566	50	0.585	1.99	1.286	1.483	0.724	1.113	1.213	0.508	15.20	16.71	0.0	3372	947	0.624	2.166	-2.682	1.531	3.261	0.323	60.4
350S300-68	0.0713	33	0.729	2.48	1.586	1.475	0.888	1.104	1.586	0.775	15.31	16.97	0.0	2774	592	1.235	2.649	-2.663	1.521	3.238	0.324	75.1
350S300-68	0.0713	50	0.729	2.48	1.586	1.475	0.888	1.104	1.557	0.687	20.56	22.55	0.0	4202	897	1.235	2.649	-2.663	1.521	3.238	0.324	60.5
350S300-97	0.1017	33	1.016	3.46	2.164	1.459	1.197	1.085	2.164	1.164	25.76	27.37	0.0	3765	511	3.504	3.552	-2.623	1.500	3.192	0.325	71.9
350S300-97	0.1017	50	1.016	3.46	2.164	1.459	1.197	1.085	2.144	1.098	32.89	34.99	0.0	5704	775	3.504	3.552	-2.623	1.500	3.192	0.325	61.1
362S137-33	0.0346	33	0.236	0.80	0.479	1.424	0.059	0.501	0.479	0.232	4.59	4.73	0.0	1024	521	0.094	0.165	-1.003	0.615	1.813	0.694	34.7
362S137-43	0.0451	33	0.306	1.04	0.616	1.419	0.075	0.497	0.616	0.320	6.32	6.65	0.0	1739	676	0.207	0.208	-0.991	0.608	1.801	0.697	34.6
362S137-54	0.0566	33	0.379	1.29	0.756	1.411	0.091	0.490	0.756	0.402	7.94	8.24	0.0	2341	705	0.405	0.251	-0.978	0.601	1.785	0.700	34.6
362S137-54	0.0566	50	0.379	1.29	0.756	1.411	0.091	0.490	0.756	0.381	11.42	11.91	0.0	3372	1016	0.405	0.251	-0.978	0.601	1.785	0.700	27.9
362S137-68	0.0713	33	0.470	1.60	0.922	1.401	0.109	0.480	0.922	0.498	9.84	10.06	0.0	2884	662	0.797	0.302	-0.959	0.592	1.764	0.704	34.6
362S137-68	0.0713	50	0.470	1.60	0.922	1.401	0.109	0.480	0.922	0.493	14.77	15.24	0.0	4370	1004	0.797	0.302	-0.959	0.592	1.764	0.704	27.8
362S137-97	0.1017	33	0.648	2.20	1.229	1.377	0.137	0.460	1.229	0.662	16.36	16.75	0.0	3922	577	2.233	0.390	-0.922	0.573	1.720	0.713	30.9
362S137-97	0.1017	50	0.648	2.20	1.229	1.377	0.137	0.460	1.229	0.662	24.10	24.67	0.0	5943	875	2.233	0.390	-0.922	0.573	1.720	0.713	25.1
362S162-33	0.0346	33	0.262	0.89	0.551	1.450	0.099	0.616	0.551	0.268	5.29	5.43	0.0	1024	521	0.105	0.297	-1.308	0.789	2.048	0.592	42.6
362S162-43	0.0451	33	0.340	1.16	0.710	1.445	0.127	0.611	0.710	0.372	7.34	7.62	0.0	1739	676	0.230	0.376	-1.297	0.782	2.036	0.594	42.5
362S162-54	0.0566	33	0.422	1.44	0.873	1.438	0.154	0.604	0.873	0.466	9.22	9.51	0.0	2341	705	0.451	0.457	-1.283	0.774	2.020	0.597	42.5
362S162-54	0.0566	50	0.422	1.44	0.873	1.438	0.154	0.604	0.873	0.444	13.28	13.59	0.0	3372	1016	0.451	0.457	-1.283	0.774	2.020	0.597	34.4
362S162-68	0.0713	33	0.524	1.78	1.069	1.429	0.186	0.596	1.069	0.579	11.43	11.65	0.0	2884	662	0.887	0.552	-1.264	0.765	1.998	0.600	42.7
362S162-68	0.0713	50	0.524	1.78	1.069	1.429	0.186	0.596	1.069	0.574	17.18	17.65	0.0	4370	1004	0.887	0.552	-1.264	0.765	1.998	0.600	34.3
362S162-97	0.1017	33	0.724	2.46	1.435	1.408	0.241	0.577	1.435	0.776	18.62	19.00	0.0	3922	577	2.496	0.723	-1.226	0.745	1.954	0.606	38.9
362S162-97	0.1017	50	0.724	2.46	1.435	1.408	0.241	0.577	1.435	0.776	27.52	28.08	0.0	5943	875	2.496	0.723	-1.226	0.745	1.954	0.606	31.5
362S200-33	0.0346	33	0.297	1.01	0.648	1.478	0.177	0.772	0.647	0.294	5.81	6.18	0.0	1024	521	0.118	0.577	-1.741	1.030	2.411	0.478	53.6
362S200-43	0.0451	33	0.385	1.31	0.836	1.474	0.227	0.767	0.836	0.427	8.43	8.70	0.0	1739	676	0.261	0.734	-1.729	1.024	2.398	0.480	53.5
362S200-54	0.0566	33	0.479	1.63	1.030	1.467	0.277	0.761	1.030	0.553	10.93	11.23	0.0	2341	705	0.511	0.896	-1.715	1.016	2.382	0.482	53.6
362S200-54	0.0566	50	0.479	1.63	1.030	1.467	0.277	0.761	1.030	0.490	14.66	15.47	0.0	3372	1016	0.511	0.896	-1.715	1.016	2.382	0.482	43.3
362S200-68	0.0713	33	0.595	2.02	1.265	1.458	0.337	0.753	1.265	0.687	15.29	15.54	0.0	2884	662	1.008	1.089	-1.696	1.006	2.360	0.484	50.6
362S200-68	0.0713	50	0.595	2.02	1.265	1.458	0.337	0.753	1.265	0.666	19.95	20.51	0.0	4370	1004	1.008	1.089	-1.696	1.006	2.360	0.484	43.3
362S200-97	0.1017	33	0.826	2.81	1.711	1.440	0.446	0.735	1.711	0.928	21.59	21.95	0.0	3922	577	2.847	1.441	-1.658	0.986	2.315	0.487	50.0

SECTION PROPERTIES

Structural Stud Section Properties

			Gross Properties						Effective Properties							Torsional Properties						
Section	Design Thickness (in)	Fy (Yield) (ksi)	Area (in2)	Weight (lb/ft)	Ixx (in4)	Rx (in)	Iyy (in4)	Ry (in)	Ixx (in4)	Sxx (in3)	Ma-L (in-k)	Ma-D (in-k)	$K_{\Phi c}$ (in-lb/in)	Vag (lb)	VaNet (lb)	Jx1000 (in4)	Cw (in6)	Xo (in)	m (in)	Ro (in)	b	Lu (in)
362S200-97	0.1017	50	0.826	2.81	1.711	1.440	0.446	0.735	1.711	0.928	32.03	32.57	0.0	5943	875	2.847	1.441	-1.658	0.986	2.315	0.487	40.5
362S250-33	0.0346	33	0.331	1.13	0.760	1.514	0.299	0.951								0.132	0.965	-2.211	1.284	2.844	0.395	
362S250-43	0.0451	33	0.430	1.46	0.980	1.510	0.385	0.946	0.980	0.449	8.88	9.35	0.0	1739	676	0.292	1.230	-2.199	1.277	2.830	0.396	64.2
362S250-54	0.0566	33	0.535	1.82	1.210	1.504	0.473	0.940	1.210	0.582	11.51	12.46	0.0	2341	705	0.571	1.506	-2.184	1.269	2.813	0.397	64.3
362S250-54	0.0566	50	0.535	1.82	1.210	1.504	0.473	0.940	1.205	0.514	15.40	16.54	0.0	3372	1016	0.571	1.506	-2.184	1.269	2.813	0.397	52.0
362S250-68	0.0713	33	0.666	2.27	1.490	1.496	0.578	0.931	1.490	0.774	16.85	17.68	0.0	2884	662	1.129	1.837	-2.165	1.259	2.791	0.398	61.4
362S250-68	0.0713	50	0.666	2.27	1.490	1.496	0.578	0.931	1.490	0.689	20.63	22.17	0.0	4370	1004	1.129	1.837	-2.165	1.259	2.791	0.398	52.0
362S250-97	0.1017	33	0.927	3.16	2.027	1.478	0.772	0.912	2.027	1.100	24.85	25.26	0.0	3922	577	3.197	2.452	-2.126	1.239	2.746	0.400	61.0
362S250-97	0.1017	50	0.927	3.16	2.027	1.478	0.772	0.912	2.027	1.046	35.17	36.93	0.0	5943	875	3.197	2.452	-2.126	1.239	2.746	0.400	49.3
362S300-54	0.0566	33	0.592	2.01	1.390	1.533	0.734	1.114	1.383	0.607	11.99	13.22	0.0	2341	705	0.632	2.316	-2.659	1.522	3.265	0.337	74.5
362S300-54	0.0566	50	0.592	2.01	1.390	1.533	0.734	1.114	1.312	0.529	15.83	17.34	0.0	3372	1016	0.632	2.316	-2.659	1.522	3.265	0.337	60.2
362S300-68	0.0713	33	0.738	2.51	1.716	1.525	0.900	1.105	1.716	0.811	16.02	17.65	0.0	2884	662	1.250	2.833	-2.640	1.512	3.243	0.337	74.9
362S300-68	0.0713	50	0.738	2.51	1.716	1.525	0.900	1.105	1.684	0.716	21.44	23.42	0.0	4370	1004	1.250	2.833	-2.640	1.512	3.243	0.337	60.4
362S300-97	0.1017	33	1.029	3.50	2.343	1.509	1.213	1.086	2.343	1.217	26.95	28.61	0.0	3922	577	3.548	3.803	-2.600	1.491	3.196	0.338	71.6
362S300-97	0.1017	50	1.029	3.50	2.343	1.509	1.213	1.086	2.320	1.150	34.42	36.41	0.0	5943	875	3.548	3.803	-2.600	1.491	3.196	0.338	60.9
400S162-97	0.1017	33	0.762	2.59	1.812	1.542	0.249	0.572	1.812	0.892	21.40	21.75	0.0	4394	797	2.628	0.889	-1.182	0.725	2.025	0.659	38.3
400S162-97	0.1017	50	0.762	2.59	1.812	1.542	0.249	0.572	1.812	0.892	31.64	32.15	0.0	6658	1207	2.628	0.889	-1.182	0.725	2.025	0.659	31.1
400S200-33	0.0346	33	0.310	1.05	0.812	1.619	0.183	0.769	0.812	0.328	6.49	6.90	0.0	976	595	0.124	0.697	-1.688	1.007	2.462	0.530	53.1
400S200-43	0.0451	33	0.402	1.37	1.047	1.615	0.235	0.764	1.047	0.478	9.45	9.74	0.0	1739	810	0.272	0.886	-1.676	1.000	2.449	0.532	53.0
400S200-54	0.0566	33	0.500	1.70	1.292	1.608	0.287	0.758	1.292	0.623	12.30	12.77	0.0	2603	944	0.534	1.083	-1.662	0.993	2.433	0.534	53.0
400S200-54	0.0566	50	0.500	1.70	1.292	1.608	0.287	0.758	1.292	0.549	16.43	17.31	0.0	3372	1223	0.534	1.083	-1.662	0.993	2.433	0.534	42.9
400S200-68	0.0713	33	0.622	2.12	1.589	1.599	0.349	0.750	1.589	0.780	15.40	15.70	0.0	3215	895	1.054	1.318	-1.643	0.983	2.412	0.536	53.2
400S200-68	0.0713	50	0.622	2.12	1.589	1.599	0.349	0.750	1.589	0.751	22.48	23.03	0.0	4871	1356	1.054	1.318	-1.643	0.983	2.412	0.536	42.9
400S200-97	0.1017	33	0.864	2.94	2.155	1.579	0.462	0.731	2.155	1.063	24.72	25.05	0.0	4394	797	2.978	1.749	-1.605	0.963	2.368	0.540	49.3
400S200-97	0.1017	50	0.864	2.94	2.155	1.579	0.462	0.731	2.155	1.063	36.68	37.17	0.0	6658	1207	2.978	1.749	-1.605	0.963	2.368	0.540	39.9
400S250-33	0.0346	33	0.344	1.17	0.948	1.659	0.310	0.949								0.137	1.165	-2.151	1.259	2.878	0.441	
400S250-43	0.0451	33	0.447	1.52	1.224	1.655	0.399	0.945	1.224	0.503	9.93	10.41	0.0	1739	810	0.303	1.486	-2.139	1.252	2.864	0.443	63.7
400S250-54	0.0566	33	0.556	1.89	1.512	1.649	0.490	0.938	1.512	0.653	12.90	13.91	0.0	2603	944	0.594	1.821	-2.124	1.244	2.848	0.444	63.8
400S250-54	0.0566	50	0.556	1.89	1.512	1.649	0.490	0.938	1.506	0.576	17.24	18.42	0.0	3372	1223	0.594	1.821	-2.124	1.244	2.848	0.444	51.6
400S250-68	0.0713	33	0.693	2.36	1.864	1.640	0.599	0.929	1.864	0.883	17.45	18.42	0.0	3215	895	1.174	2.225	-2.105	1.235	2.826	0.445	64.0
400S250-68	0.0713	50	0.693	2.36	1.864	1.640	0.599	0.929	1.864	0.775	23.19	24.76	0.0	4871	1356	1.174	2.225	-2.105	1.235	2.826	0.445	51.6
400S250-97	0.1017	33	0.966	3.29	2.541	1.622	0.801	0.911	2.541	1.253	28.31	28.70	0.0	4394	797	3.329	2.978	-2.066	1.214	2.780	0.448	60.3
400S250-97	0.1017	50	0.966	3.29	2.541	1.622	0.801	0.911	2.541	1.191	40.06	41.47	0.0	6658	1207	3.329	2.978	-2.066	1.214	2.780	0.448	48.8
400S300-54	0.0566	33	0.613	2.09	1.732	1.681	0.760	1.114	1.723	0.680	13.44	14.70	0.0	2603	944	0.655	2.802	-2.594	1.496	3.285	0.377	74.0
400S300-54	0.0566	50	0.613	2.09	1.732	1.681	0.760	1.114	1.637	0.592	17.72	19.24	0.0	3372	1223	0.655	2.802	-2.594	1.496	3.285	0.377	59.9
400S300-68	0.0713	33	0.764	2.60	2.139	1.673	0.933	1.105	2.139	0.914	18.06	19.68	0.0	3215	895	1.295	3.432	-2.574	1.486	3.263	0.378	74.3
400S300-68	0.0713	50	0.764	2.60	2.139	1.673	0.933	1.105	2.099	0.805	24.09	26.05	0.0	4871	1356	1.295	3.432	-2.574	1.486	3.263	0.378	60.0
400S300-97	0.1017	33	1.067	3.63	2.928	1.656	1.258	1.086	2.928	1.381	30.58	32.40	0.0	4394	797	3.679	4.619	-2.535	1.465	3.216	0.379	70.8
400S300-97	0.1017	50	1.067	3.63	2.928	1.656	1.258	1.086	2.897	1.307	39.12	40.72	0.0	6658	1207	3.679	4.619	-2.535	1.465	3.216	0.379	60.3
550S137-33	0.0346	33	0.301	1.02	1.283	2.064	0.067	0.472	1.283	0.453	8.95	7.48	114.3	699	699	0.120	0.411	-0.841	0.536	2.278	0.864	33.7
550S137-43	0.0451	33	0.391	1.33	1.655	2.059	0.085	0.467	1.655	0.592	13.08	11.60	174.5	1550	1199	0.265	0.520	-0.830	0.530	2.268	0.866	31.7
550S137-54	0.0566	33	0.486	1.65	2.039	2.049	0.103	0.460	2.039	0.741	16.77	15.90	157.9	2739	1666	0.519	0.632	-0.817	0.523	2.254	0.868	31.1
550S137-54	0.0566	50	0.486	1.65	2.039	2.049	0.103	0.460	2.039	0.714	24.03	20.88	419.4	3093	1881	0.519	0.632	-0.817	0.523	2.254	0.868	25.4
550S137-68	0.0713	33	0.604	2.05	2.503	2.036	0.123	0.451	2.503	0.910	21.22	21.22	0.0	4347	2057	1.023	0.764	-0.801	0.514	2.234	0.871	30.4
550S137-68	0.0713	50	0.604	2.05	2.503	2.036	0.123	0.451	2.503	0.909	31.42	28.89	545.9	5350	2532	1.023	0.764	-0.801	0.514	2.234	0.871	24.9
550S137-97	0.1017	33	0.838	2.85	3.380	2.008	0.155	0.430	3.380	1.229	30.35	30.35	0.0	6282	1997	2.891	0.997	-0.766	0.497	2.192	0.878	29.2
550S137-97	0.1017	50	0.838	2.85	3.380	2.008	0.155	0.430	3.380	1.229	44.72	44.72	0.0	9518	3026	2.891	0.997	-0.766	0.497	2.192	0.878	23.9
550S162-33	0.0346	33	0.327	1.11	1.458	2.112	0.113	0.589	1.458	0.512	10.11	8.63	91.3	699	699	0.130	0.713	-1.114	0.697	2.459	0.795	41.4
550S162-43	0.0451	33	0.424	1.44	1.883	2.107	0.145	0.584	1.883	0.681	14.79	13.14	159.7	1550	1199	0.288	0.905	-1.103	0.691	2.448	0.797	39.2
550S162-54	0.0566	33	0.528	1.80	2.324	2.098	0.176	0.577	2.324	0.845	18.76	17.87	128.4	2739	1666	0.564	1.105	-1.090	0.684	2.434	0.800	38.7
550S162-54	0.0566	50	0.528	1.80	2.324	2.098	0.176	0.577	2.324	0.811	26.86	23.52	349.2	3093	1881	0.564	1.105	-1.090	0.684	2.434	0.800	31.6
550S162-68	0.0713	33	0.657	2.24	2.861	2.086	0.212	0.568	2.861	1.040	23.72	23.72	0.0	4347	2057	1.114	1.342	-1.072	0.675	2.414	0.803	38.0
550S162-68	0.0713	50	0.657	2.24	2.861	2.086	0.212	0.568	2.861	1.031	34.94	32.28	443.2	5350	2532	1.114	1.342	-1.072	0.675	2.414	0.803	31.1
550S162-97	0.1017	33	0.915	3.11	3.886	2.061	0.276	0.549	3.886	1.413	33.91	33.91	0.0	6282	1997	3.154	1.775	-1.037	0.656	2.372	0.809	36.8
550S162-97	0.1017	50	0.915	3.11	3.886	2.061	0.276	0.549	3.886	1.413	50.13	50.13	0.0	9518	3026	3.154	1.775	-1.037	0.656	2.372	0.809	30.0
550S200-33	0.0346	33	0.362	1.23	1.694	2.164	0.204	0.751	1.678	0.559	11.05	9.80	58.5	699	699	0.144	1.326	-1.508	0.925	2.742	0.698	51.9
550S200-43	0.0451	33	0.469	1.60	2.189	2.159	0.261	0.746	2.189	0.776	15.33	13.96	112.2	1550	1199	0.318	1.691	-1.496	0.918	2.731	0.700	51.7
550S200-54	0.0566	33	0.585	1.99	2.706	2.152	0.320	0.739	2.706	0.984	21.41	19.98	173.9	2739	1666	0.624	2.072	-1.483	0.911	2.716	0.702	49.2
550S200-54	0.0566	50	0.585	1.99	2.706	2.152	0.320	0.739	2.706	0.901	26.98	24.84	180.4	3093	1881	0.624	2.072	-1.483	0.911	2.716	0.702	41.8
550S200-68	0.0713	33	0.729	2.48	3.341	2.141	0.389	0.731	3.341	1.215	27.03	27.03	0.0	4347	2057	1.235	2.531	-1.465	0.902	2.695	0.705	48.5
550S200-68	0.0713	50	0.729	2.48	3.341	2.141	0.389	0.731	3.341	1.170	38.83	35.92	380.3	5350	2532	1.235	2.531	-1.465	0.902	2.695	0.705	39.6
550S200-97	0.1017	33	1.016	3.46	4.563	2.119	0.515	0.712	4.563	1.659	38.58	38.58	0.0	6282	1997	3.504	3.384	-1.428	0.882	2.652	0.710	47.4
550S200-97	0.1017	50	1.016	3.46	4.563	2.119	0.515	0.712	4.563	1.659	57.25	57.25	0.0	9518	3026	3.504	3.384	-1.428	0.882	2.652	0.710	38.6
550S250-33	0.0346	33	0.396	1.35	1.952	2.220	0.346	0.935								0.158	2.219	-1.945	1.169	3.095	0.605	
550S250-43	0.0451	33	0.515	1.75	2.524	2.215	0.445	0.930	2.524	0.817	16.15	14.74	94.1	1550	1199	0.349	2.837	-1.933	1.163	3.083	0.607	62.6
550S250-54	0.0566	33	0.641	2.18	3.126	2.208	0.547	0.923	3.126	1.033	20.40	19.87	53.3	2739	1666	0.685	3.486	-1.919	1.155	3.067	0.609	62.6
550S250-54	0.0566	50	0.641	2.18	3.126	2.208	0.547	0.923	3.084	0.950	28.44	26.11	166.4	3093	1881	0.685	3.486	-1.919	1.155	3.067	0.609	50.7
550S250-68	0.0713	33	0.800	2.72	3.866	2.198	0.669	0.914	3.866	1.345	29.28	28.52	117.8	4347	2057	1.356	4.274	-1.900	1.146	3.046	0.611	59.5
550S250-68	0.0713	50	0.800	2.72	3.866	2.198	0.669	0.914	3.864	1.233	36.91	35.43	164.4	5350	2532	1.356	4.274	-1.900	1.146	3.046	0.611	50.6
550S250-97	0.1017	33	1.118	3.80	5.304	2.178	0.897	0.895	5.304	1.925	43.47	43.57	0.0	6282	1997	3.855	5.761	-1.862	1.126	3.002	0.615	58.4
550S250-97	0.1017	50	1.118	3.80	5.304	2.178	0.897	0.895	5.304	1.837	61.77	60.32	328.0	9518	3026	3.855	5.761	-1.862	1.126	3.002	0.615	47.6
550S300-54	0.0566	33	0.698	2.37	3.545	2.254	0.850	1.104	3.505	1.080	21.34	20.74	51.4	2739	1666	0.745	5.364	-2.365	1.401	3.449	0.530	73.0
550S300-54	0.0566	50	0.698	2.37	3.545	2.254	0.850	1.104	3.295	0.983	29.44	27.00	156.5	3093	1881	0.745	5.364	-2.365	1.401	3.449	0.530	59.2
550S300-68	0.0713	33	0.871	2.96	4.391	2.245	1.044	1.095	4.384	1.411	27.88	28.03	0.0	4347	2057	1.476	6.594	-2.346	1.391	3.427	0.531	73.1
550S300-68	0.0713	50	0.871	2.96	4.391	2.245	1.044	1.095	4.285	1.287	38.53	36.85	164.5	5350	2532	1.476	6.594	-2.346	1.391	3.427	0.531	59.1
550S300-97	0.1017	33	1.220	4.15	6.045	2.226	1.411	1.075	6.045	2.101	46.52	47.35	0.0	6282	1997	4.205	8.937	-2.307	1.371	3.381	0.535	69.1
550S300-97	0.1017	50	1.220	4.15	6.045	2.226	1.411	1.075	5.964	2.005	60.02	58.54	315.2	9518	3026	4.205	8.937	-2.307	1.371	3.381	0.535	59.1
600S137-33	0.0346	33	0.318	1.08	1.582	2.229	0.069	0.464	1.548	0.455	8.98	8.18	43.2	638	638	0.127	0.500	-0.807	0.519	2.416	0.889	33.5
600S137-43	0.0451	33	0.413	1.41	2.042	2.223	0.087	0.459	2.041	0.645	12.74	11.82	90.2	1416	1240	0.280	0.633	-0.796	0.513	2.406	0.890	33.3
600S137-54	0.0566	33	0.514	1.75	2.518	2.213	0.105	0.452	2.518	0.832	16.44	15.95	82.0	2739	1890	0.549	0.769	-0.784	0.506	2.391	0.893	33.0
600S137-54	0.0566	50	0.514	1.75	2.518	2.213	0.105	0.452	2.518	0.777	23.26	21.24	226.8	2823	1947	0.549	0.769	-0.784	0.506	2.391	0.893	26.8
600S137-68	0.0713	33	0.640	2.18	3.094	2.200	0.125	0.443	3.094	1.031	24.05	24.05	0.0	4347	2339	1.084	0.930	-0.768	0.497	2.371	0.895	30.1
600S137-68	0.0713	50	0.640	2.18	3.094	2.200	0.125	0.443	3.094	1.030	30.84	28.89	394.7	5350	2879	1.084	0.930	-0.768	0.497	2.371	0.895	26.5
600S137-97	0.1017	33	0.889	3.03	4.188	2.170	0.159	0.422	4.188	1.396	34.48	34.48	0.0	6911	2512	3.066	1.216	-0.734	0.480	2.330	0.901	28.8
600S137-97	0.1017	50	0.889	3.03	4.188	2.170	0.159	0.422	4.188	1.396	50.80	50.80	0.0	10472	3805	3.066	1.216	-0.734	0.480	2.330	0.901	23.6
600S162-33	0.0346	33	0.344	1.17	1.793	2.282	0.116	0.581	1.793	0.577	11.41	9.47	102.4	638	638	0.137	0.861	-1.072	0.677	2.587	0.828	41.1
600S162-43	0.0451	33	0.447	1.52	2.316	2.276	0.148	0.576	2.316	0.767	16.68	14.46	182.3	1416	1240	0.303	1.095	-1.062	0.670	2.577	0.830	39.0
600S162-54	0.0566	33	0.556	1.89	2.860	2.267	0.180	0.570	2.860	0.953	21.17	19.75	173.3	2739	1890	0.594	1.337	-1.049	0.663	2.562	0.832	38.4
600S162-54	0.0566	50	0.556	1.89	2.860	2.267	0.180	0.570	2.860	0.916	30.33	25.90	396.6	2823	1947	0.594	1.337	-1.049	0.663	2.562	0.832	31.4
600S162-68	0.0713	33	0.693	2.36	3.525	2.255	0.218	0.560	3.525	1.175	26.79	26.79	0.0	4347	2339	1.174	1.626	-1.032	0.655	2.543	0.835	37.7
600S162-68	0.0713	50	0.693	2.36	3.525	2.255	0.218	0.560	3.525	1.164	39.47	35.70	534.3	5350	2879	1.174	1.626	-1.032	0.655	2.543	0.835	30.8
600S162-97	0.1017	33	0.966	3.29	4.797	2.229	0.283	0.541	4.797	1.599	38.37	38.37	0.0	6911	2512	3.329	2.153	-0.997	0.636	2.501	0.841	36.4
600S162-97	0.1017	50	0.966	3.29	4.797	2.229	0.283	0.541	4.797	1.599	56.73	56.73	0.0	10472	3805	3.329	2.153	-0.997	0.636	2.501	0.841	29.8
600S200-33	0.0346	33	0.379	1.29	2.075	2.340	0.209	0.743	2.058	0.621	12.28	10.76	58.8	638	638	0.151	1.593	-1.457	0.901	2.855	0.740	51.6
600S200-43	0.0451	33	0.492	1.67	2.683	2.335	0.268	0.739	2.683	0.873	17.24	15.39	128.7	1416	1240	0.334	2.033	-1.446	0.894	2.844	0.742	51.4

SECTION PROPERTIES

Structural Stud Section Properties

			Gross Properties						Effective Properties							Torsional Properties						
Section	Design Thickness (in)	Fy (Yield) (ksi)	Area (in2)	Weight (lb/ft)	Ixx (in4)	Rx (in)	Iyy (in4)	Ry (in)	Ixx (in4)	Sxx (in3)	Ma-L (in-k)	Ma-D (in-k)	$K_{\phi c}$ (in-lb/in)	Vag (lb)	VaNet (lb)	Jx1000 (in4)	Cw (in6)	Xo (in)	m (in)	Ro (in)	b	Lu (in)
600S200-54	0.0566	33	0.613	2.09	3.319	2.327	0.328	0.732	3.319	1.106	24.07	22.07	205.1	2739	1890	0.655	2.493	-1.432	0.887	2.829	0.744	48.9
600S200-54	0.0566	50	0.613	2.09	3.319	2.327	0.328	0.732	3.319	1.015	30.40	27.38	216.3	2823	1947	0.655	2.493	-1.432	0.887	2.829	0.744	41.6
600S200-68	0.0713	33	0.764	2.60	4.101	2.316	0.400	0.723	4.101	1.367	30.42	29.97	69.1	4347	2339	1.295	3.047	-1.415	0.878	2.809	0.746	48.2
600S200-68	0.0713	50	0.764	2.60	4.101	2.316	0.400	0.723	4.101	1.317	43.71	39.69	443.7	5350	2879	1.295	3.047	-1.415	0.878	2.809	0.746	39.3
600S200-97	0.1017	33	1.067	3.63	5.612	2.293	0.530	0.705	5.612	1.871	43.49	43.49	0.0	6911	2512	3.679	4.080	-1.378	0.859	2.767	0.752	46.9
600S200-97	0.1017	50	1.067	3.63	5.612	2.293	0.530	0.705	5.612	1.871	64.53	63.67	196.7	10472	3805	3.679	4.080	-1.378	0.859	2.767	0.752	38.3
600S250-33	0.0346	33	0.413	1.41	2.383	2.401	0.356	0.928								0.165	2.666	-1.886	1.143	3.191	0.651	
600S250-43	0.0451	33	0.537	1.83	3.082	2.396	0.458	0.923	3.082	0.918	18.14	16.21	110.0	1416	1240	0.364	3.411	-1.874	1.136	3.179	0.652	62.4
600S250-54	0.0566	33	0.670	2.28	3.819	2.388	0.562	0.917	3.819	1.159	22.90	21.90	84.5	2739	1890	0.715	4.194	-1.860	1.129	3.163	0.654	62.3
600S250-54	0.0566	50	0.670	2.28	3.819	2.388	0.562	0.917	3.766	1.069	32.00	28.71	201.0	2823	1947	0.715	4.194	-1.860	1.129	3.163	0.654	50.5
600S250-68	0.0713	33	0.836	2.84	4.727	2.378	0.688	0.908	4.727	1.508	32.82	31.50	173.1	4347	2339	1.416	5.145	-1.842	1.119	3.142	0.656	59.2
600S250-68	0.0713	50	0.836	2.84	4.727	2.378	0.688	0.908	4.723	1.386	41.49	39.07	229.5	5350	2879	1.416	5.145	-1.842	1.119	3.142	0.656	50.4
600S250-97	0.1017	33	1.169	3.98	6.496	2.357	0.923	0.889	6.496	2.161	48.81	48.91	0.0	6911	2512	4.030	6.947	-1.803	1.100	3.098	0.661	58.0
600S250-97	0.1017	50	1.169	3.98	6.496	2.357	0.923	0.889	6.496	2.063	69.38	66.81	488.5	10472	3805	4.030	6.947	-1.803	1.100	3.098	0.661	47.3
600S300-54	0.0566	33	0.726	2.47	4.319	2.439	0.875	1.098	4.269	1.211	23.93	22.80	83.5	2739	1890	0.775	6.452	-2.299	1.372	3.527	0.575	72.8
600S300-54	0.0566	50	0.726	2.47	4.319	2.439	0.875	1.098	4.014	1.106	33.13	29.62	192.1	2823	1947	0.775	6.452	-2.299	1.372	3.527	0.575	59.1
600S300-68	0.0713	33	0.907	3.09	5.354	2.430	1.075	1.089	5.344	1.581	31.23	30.88	40.7	4347	2339	1.537	7.937	-2.280	1.363	3.505	0.577	72.8
600S300-68	0.0713	50	0.907	3.09	5.354	2.430	1.075	1.089	5.221	1.446	43.30	40.53	231.4	5350	2879	1.537	7.937	-2.280	1.363	3.505	0.577	59.0
600S300-97	0.1017	33	1.271	4.32	7.381	2.410	1.454	1.070	7.381	2.352	52.07	52.40	0.0	6911	2512	4.381	10.776	-2.241	1.343	3.461	0.581	68.8
600S300-97	0.1017	50	1.271	4.32	7.381	2.410	1.454	1.070	7.280	2.247	67.28	64.67	471.1	10472	3805	4.381	10.776	-2.241	1.343	3.461	0.581	58.8
725S125-33[1]	0.0346	33	0.340	1.16	2.251	2.573	0.043	0.357	2.114	0.456	9.00	7.55	92.7	525	525	0.136	0.464	-0.549	0.366	2.655	0.957	27.0
725S125-43	0.0451	33	0.441	1.50	2.905	2.566	0.055	0.352	2.835	0.691	13.65	11.46	255.9	1163	1163	0.299	0.586	-0.540	0.361	2.646	0.958	26.7
725S125-54	0.0566	33	0.549	1.87	3.582	2.554	0.065	0.344	3.582	0.920	18.17	16.18	378.4	2316	2072	0.587	0.708	-0.528	0.354	2.631	0.960	26.4
725S125-54	0.0566	50	0.549	1.87	3.582	2.554	0.065	0.344	3.504	0.841	25.18	21.10	558.0	2316	2072	0.587	0.708	-0.528	0.354	2.631	0.960	21.4
725S125-68	0.0713	33	0.684	2.33	4.403	2.537	0.076	0.334	4.396	1.210	23.91	22.63	420.9	4347	3044	1.159	0.851	-0.514	0.347	2.610	0.961	26.0
725S125-68	0.0713	50	0.684	2.33	4.403	2.537	0.076	0.334	4.396	1.141	34.15	30.02	946.3	4680	3278	1.159	0.851	-0.514	0.347	2.610	0.961	21.1
725S137-33[1]	0.0346	33	0.362	1.23	2.509	2.634	0.072	0.445	2.392	0.559	11.05	9.82	45.8	525	525	0.144	0.766	-0.733	0.480	2.770	0.930	32.9
725S137-43	0.0451	33	0.469	1.60	3.241	2.628	0.091	0.441	3.178	0.802	15.84	14.36	97.3	1163	1163	0.318	0.971	-0.724	0.474	2.761	0.931	32.6
725S137-54	0.0566	33	0.585	1.99	4.003	2.617	0.110	0.434	4.003	1.048	20.72	19.64	116.6	2316	2072	0.624	1.181	-0.712	0.468	2.746	0.933	32.4
725S137-54	0.0566	50	0.585	1.99	4.003	2.617	0.110	0.434	3.945	0.968	28.99	25.88	237.8	2316	2072	0.624	1.181	-0.712	0.468	2.746	0.933	26.2
725S137-68	0.0713	33	0.729	2.48	4.932	2.602	0.131	0.424	4.932	1.359	26.86	26.63	42.4	4347	3044	1.235	1.430	-0.697	0.460	2.726	0.935	32.1
725S137-68	0.0713	50	0.729	2.48	4.932	2.602	0.131	0.424	4.932	1.304	39.03	35.69	448.5	4680	3278	1.235	1.430	-0.697	0.460	2.726	0.935	26.0
725S137-97	0.1017	33	1.016	3.46	6.710	2.569	0.166	0.404	6.710	1.851	36.58	36.58	0.0	8484	4049	3.504	1.875	-0.665	0.443	2.685	0.939	31.5
725S137-97	0.1017	50	1.016	3.46	6.710	2.569	0.166	0.404	6.710	1.851	55.42	55.42	0.0	10885	5195	3.504	1.875	-0.665	0.443	2.685	0.939	25.4
725S162-33[1]	0.0346	33	0.388	1.32	2.822	2.698	0.122	0.562	2.706	0.638	12.61	11.48	32.8	525	525	0.155	1.309	-0.982	0.631	2.926	0.887	40.5
725S162-43	0.0451	33	0.503	1.71	3.648	2.692	0.156	0.557	3.585	0.913	18.04	16.60	73.8	1163	1163	0.341	1.666	-0.972	0.625	2.916	0.889	40.2
725S162-54	0.0566	33	0.627	2.13	4.513	2.683	0.190	0.550	4.513	1.188	23.48	22.49	82.6	2316	2072	0.670	2.036	-0.960	0.618	2.902	0.891	40.0
725S162-54	0.0566	50	0.627	2.13	4.513	2.683	0.190	0.550	4.455	1.100	32.93	29.69	189.1	2316	2072	0.670	2.036	-0.960	0.618	2.902	0.891	32.5
725S162-68	0.0713	33	0.782	2.66	5.572	2.669	0.229	0.541	5.572	1.536	30.35	30.24	15.7	4347	3044	1.325	2.479	-0.944	0.610	2.882	0.893	39.8
725S162-68	0.0713	50	0.782	2.66	5.572	2.669	0.229	0.541	5.572	1.479	44.29	40.57	378.5	4680	3278	1.325	2.479	-0.944	0.610	2.882	0.893	32.2
725S162-97	0.1017	33	1.093	3.72	7.618	2.640	0.297	0.522	7.618	2.101	50.43	50.43	0.0	8484	4049	3.767	3.293	-0.911	0.592	2.841	0.897	35.6
725S162-97	0.1017	50	1.093	3.72	7.618	2.640	0.297	0.522	7.618	2.101	74.54	72.43	418.2	10885	5195	3.767	3.293	-0.911	0.592	2.841	0.897	29.1
725S200-33[1]	0.0346	33	0.422	1.44	3.241	2.771	0.221	0.724	3.234	0.743	14.67	13.14	37.4	525	525	0.168	2.395	-1.346	0.847	3.164	0.819	50.9
725S200-43	0.0451	33	0.548	1.87	4.193	2.765	0.284	0.719	4.193	1.131	22.34	18.92	167.9	1163	1163	0.372	3.059	-1.335	0.840	3.154	0.821	50.7
725S200-54	0.0566	33	0.684	2.33	5.195	2.756	0.347	0.713	5.195	1.433	31.18	27.29	278.5	2316	2072	0.730	3.755	-1.322	0.833	3.139	0.823	48.1
725S200-54	0.0566	50	0.684	2.33	5.195	2.756	0.347	0.713	5.195	1.321	39.55	33.68	301.7	2316	2072	0.730	3.755	-1.322	0.833	3.139	0.823	41.0
725S200-68	0.0713	33	0.853	2.90	6.428	2.744	0.423	0.704	6.428	1.773	39.46	37.37	222.1	4347	3044	1.446	4.596	-1.305	0.824	3.119	0.825	47.4
725S200-68	0.0713	50	0.853	2.90	6.428	2.744	0.423	0.704	6.428	1.710	56.77	49.12	597.1	4680	3278	1.446	4.596	-1.305	0.824	3.119	0.825	38.7
725S200-97	0.1017	33	1.194	4.06	8.831	2.719	0.561	0.685	8.831	2.436	56.64	56.64	0.0	8484	4049	4.118	6.175	-1.270	0.806	3.078	0.830	46.0
725S200-97	0.1017	50	1.194	4.06	8.831	2.719	0.561	0.685	8.831	2.436	84.04	79.95	643.8	10885	5195	4.118	6.175	-1.270	0.806	3.078	0.830	37.6
725S250-43	0.0451	33	0.593	2.02	4.778	2.838	0.486	0.905	4.778	1.186	23.44	19.88	144.7	1163	1163	0.402	5.134	-1.744	1.076	3.451	0.745	61.8
725S250-54	0.0566	33	0.740	2.52	5.927	2.829	0.597	0.898	5.927	1.495	29.55	27.00	151.7	2316	2072	0.791	6.319	-1.730	1.069	3.436	0.747	61.7
725S250-54	0.0566	50	0.740	2.52	5.927	2.829	0.597	0.898	5.837	1.388	41.55	35.24	277.3	2316	2072	0.791	6.319	-1.730	1.069	3.436	0.747	50.0
725S250-68	0.0713	33	0.925	3.15	7.347	2.819	0.730	0.889	7.347	1.942	42.27	39.07	292.7	4347	3044	1.567	7.765	-1.712	1.059	3.415	0.749	58.6
725S250-68	0.0713	50	0.925	3.15	7.347	2.819	0.730	0.889	7.334	1.795	53.75	48.25	370.9	4680	3278	1.567	7.765	-1.712	1.059	3.415	0.749	49.9
725S250-97	0.1017	33	1.296	4.41	10.130	2.796	0.980	0.869	10.130	2.788	62.98	62.87	21.1	8484	4049	4.468	10.516	-1.675	1.040	3.373	0.753	57.2
725S250-97	0.1017	50	1.296	4.41	10.130	2.796	0.980	0.869	10.130	2.666	89.66	83.36	838.0	10885	5195	4.468	10.516	-1.675	1.040	3.373	0.753	46.7
725S300-54	0.0566	33	0.797	2.71	6.659	2.891	0.931	1.081	6.575	1.561	30.84	27.99	149.4	2316	2072	0.851	9.721	-2.152	1.307	3.762	0.673	72.4
725S300-54	0.0566	50	0.797	2.71	6.659	2.891	0.931	1.081	6.219	1.398	41.84	36.24	214.3	2316	2072	0.851	9.721	-2.152	1.307	3.762	0.673	58.8
725S300-68	0.0713	33	0.996	3.39	8.265	2.881	1.144	1.071	8.244	2.032	40.15	38.14	164.5	4347	3044	1.688	11.976	-2.133	1.298	3.741	0.675	72.3
725S300-68	0.0713	50	0.996	3.39	8.265	2.881	1.144	1.071	8.037	1.871	56.02	49.84	370.0	4680	3278	1.688	11.976	-2.133	1.298	3.741	0.675	58.6
725S300-97	0.1017	33	1.398	4.76	11.429	2.859	1.547	1.052	11.429	3.018	66.80	65.33	240.9	8484	4049	4.819	16.310	-2.095	1.278	3.697	0.679	68.1
725S300-97	0.1017	50	1.398	4.76	11.429	2.859	1.547	1.052	11.267	2.891	86.57	80.32	792.3	10885	5195	4.819	16.310	-2.095	1.278	3.697	0.679	58.3
800S137-33[1]	0.0346	33	0.388	1.32	3.198	2.873	0.073	0.435	2.998	0.622	12.30	10.71	49.2	474	474	0.155	0.957	-0.696	0.460	2.987	0.946	32.5
800S137-43	0.0451	33	0.503	1.71	4.134	2.866	0.093	0.430	4.001	0.896	17.70	15.78	104.6	1051	1051	0.341	1.214	-0.687	0.454	2.978	0.947	32.2
800S137-54	0.0566	33	0.627	2.13	5.110	2.855	0.112	0.423	5.077	1.179	23.29	21.74	137.1	2091	2091	0.670	1.478	-0.676	0.448	2.964	0.948	32.0
800S137-54	0.0566	50	0.627	2.13	5.110	2.855	0.112	0.423	4.974	1.083	32.42	28.47	251.0	2091	2091	0.670	1.478	-0.676	0.448	2.964	0.948	25.9
800S137-68	0.0713	33	0.782	2.66	6.303	2.839	0.134	0.414	6.303	1.541	30.45	29.75	107.5	4221	3367	1.325	1.789	-0.661	0.440	2.944	0.950	31.6
800S137-68	0.0713	50	0.782	2.66	6.303	2.839	0.134	0.414	6.285	1.468	43.96	39.57	482.1	4221	3367	1.325	1.789	-0.661	0.440	2.944	0.950	25.6
800S137-97	0.1017	33	1.093	3.72	8.597	2.805	0.169	0.394	8.597	2.149	53.09	53.09	0.0	8843	4824	3.767	2.349	-0.630	0.423	2.902	0.953	27.6
800S137-97	0.1017	50	1.093	3.72	8.597	2.805	0.169	0.394	8.597	2.149	64.35	63.91	113.0	10885	5938	3.767	2.349	-0.630	0.423	2.902	0.953	25.0
800S162-33[1]	0.0346	33	0.413	1.41	3.582	2.943	0.125	0.550	3.384	0.710	14.03	12.61	33.8	474	474	0.165	1.630	-0.936	0.607	3.137	0.911	40.1
800S162-43	0.0451	33	0.537	1.83	4.633	2.937	0.160	0.546	4.500	1.019	20.14	18.33	75.3	1051	1051	0.364	2.076	-0.926	0.601	3.128	0.912	39.8
800S162-54	0.0566	33	0.670	2.28	5.736	2.927	0.194	0.539	5.702	1.334	26.36	24.98	91.9	2091	2091	0.715	2.539	-0.914	0.594	3.113	0.914	39.6
800S162-54	0.0566	50	0.670	2.28	5.736	2.927	0.194	0.539	5.600	1.229	36.79	32.81	189.8	2091	2091	0.715	2.539	-0.914	0.594	3.113	0.914	32.1
800S162-68	0.0713	33	0.836	2.84	7.089	2.913	0.235	0.530	7.089	1.737	34.32	33.84	55.2	4221	3367	1.416	3.093	-0.899	0.586	3.094	0.916	39.3
800S162-68	0.0713	50	0.836	2.84	7.089	2.913	0.235	0.530	7.070	1.663	49.80	45.11	384.9	4221	3367	1.416	3.093	-0.899	0.586	3.094	0.916	31.9
800S162-97	0.1017	33	1.169	3.98	9.713	2.883	0.305	0.510	9.713	2.428	58.27	58.27	0.0	8843	4824	4.030	4.114	-0.866	0.568	3.053	0.919	35.1
800S162-97	0.1017	50	1.169	3.98	9.713	2.883	0.305	0.510	9.713	2.428	72.70	71.94	143.0	10885	5938	4.030	4.114	-0.866	0.568	3.053	0.919	31.4
800S200-33[1]	0.0346	33	0.448	1.52	4.096	3.023	0.227	0.712	4.096	0.816	16.12	14.52	31.2	474	474	0.179	2.971	-1.288	0.817	3.363	0.853	50.6
800S200-43	0.0451	33	0.582	1.98	5.302	3.018	0.292	0.708	5.302	1.293	25.54	20.99	186.8	1051	1051	0.395	3.797	-1.277	0.811	3.353	0.855	50.3
800S200-54	0.0566	33	0.726	2.47	6.573	3.009	0.357	0.701	6.573	1.643	35.75	30.37	323.0	2091	2091	0.775	4.663	-1.265	0.804	3.338	0.856	47.8
800S200-54	0.0566	50	0.726	2.47	6.573	3.009	0.357	0.701	6.573	1.499	44.87	37.37	318.9	2091	2091	0.775	4.663	-1.265	0.804	3.338	0.856	40.7
800S200-68	0.0713	33	0.907	3.09	8.140	2.996	0.435	0.692	8.140	2.035	45.29	41.79	309.3	4221	3367	1.537	5.712	-1.248	0.796	3.319	0.859	47.0
800S200-68	0.0713	50	0.907	3.09	8.140	2.996	0.435	0.692	8.140	1.964	65.21	54.70	691.9	4221	3367	1.537	5.712	-1.248	0.796	3.319	0.859	38.4
800S200-97	0.1017	33	1.271	4.32	11.203	2.969	0.576	0.673	11.203	2.801	65.12	65.12	0.0	8843	4824	4.381	7.684	-1.214	0.777	3.278	0.863	45.5
800S200-97	0.1017	50	1.271	4.32	11.203	2.969	0.576	0.673	11.203	2.801	96.63	89.76	901.1	10885	5938	4.381	7.684	-1.214	0.777	3.278	0.863	37.2
800S250-33[1]	0.0346	33	0.483	1.64	4.645	3.102	0.389	0.897								0.193	4.974	-1.686	1.049	3.643	0.786	
800S250-43	0.0451	33	0.627	2.13	6.015	3.097	0.500	0.893	6.015	1.313	25.95	22.06	126.1	1051	1051	0.425	6.374	-1.675	1.043	3.632	0.787	61.5
800S250-54	0.0566	33	0.783	2.66	7.465	3.088	0.614	0.886	7.465	1.712	33.82	30.06	188.2	2091	2091	0.836	7.850	-1.661	1.036	3.617	0.789	61.4
800S250-54	0.0566	50	0.783	2.66	7.465	3.088	0.614	0.886	7.378	1.525	45.66	39.13	228.2	2091	2091	0.836	7.850	-1.661	1.036	3.617	0.789	49.8
800S250-68	0.0713	33	0.978	3.33	9.261	3.077	0.752	0.877	9.261	2.220	48.33	43.63	358.5	4221	3367	1.658	9.652	-1.644	1.027	3.597	0.791	58.2
800S250-68	0.0713	50	0.978	3.33	9.261	3.077	0.752	0.877	9.240	2.059	61.65	53.75	448.8	4221	3367	1.658	9.652	-1.644	1.027	3.597	0.791	49.6

SECTION PROPERTIES

Structural Stud Section Properties

			Gross Properties						Effective Properties							Torsional Properties						
Section	Design Thickness (in)	Fy (Yield) (ksi)	Area (in2)	Weight (lb/ft)	Ixx (in4)	Rx (in)	Iyy (in4)	Ry (in)	Ixx (in4)	Sxx (in3)	Ma-L (in-k)	Ma-D (in-k)	$K_{\phi c}$ (in-lb/in)	Vag (lb)	VaNet (lb)	Jx1000 (in4)	Cw (in6)	Xo (in)	m (in)	Ro (in)	b	Lu (in)
800S250-97	0.1017	33	1.372	4.67	12.789	3.053	1.009	0.857	12.789	3.191	72.07	70.72	211.4	8843	4824	4.731	13.091	-1.607	1.008	3.555	0.796	56.8
800S250-97	0.1017	50	1.372	4.67	12.789	3.053	1.009	0.857	12.789	3.054	102.70	93.42	1031.6	10885	5938	4.731	13.091	-1.607	1.008	3.555	0.796	46.4
800S300-54	0.0566	33	0.839	2.86	8.358	3.156	0.960	1.069	8.249	1.785	35.28	31.13	183.1	2091	2091	0.896	12.076	-2.073	1.271	3.924	0.721	72.2
800S300-54	0.0566	50	0.839	2.86	8.358	3.156	0.960	1.069	7.862	1.535	45.96	40.22	176.4	2091	2091	0.896	12.076	-2.073	1.271	3.924	0.721	58.6
800S300-68	0.0713	33	1.050	3.57	10.382	3.145	1.179	1.060	10.351	2.321	45.86	42.54	227.2	4221	3367	1.779	14.888	-2.055	1.262	3.903	0.723	72.0
800S300-68	0.0713	50	1.050	3.57	10.382	3.145	1.179	1.060	10.082	2.145	64.21	55.47	442.0	4221	3367	1.779	14.888	-2.055	1.262	3.903	0.723	58.4
800S300-97	0.1017	33	1.474	5.02	14.375	3.123	1.595	1.040	14.375	3.443	76.21	73.25	400.5	8843	4824	5.082	20.304	-2.017	1.243	3.860	0.727	67.7
800S300-97	0.1017	50	1.474	5.02	14.375	3.123	1.595	1.040	14.170	3.304	98.92	89.88	958.5	10885	5938	5.082	20.304	-2.017	1.243	3.860	0.727	58.1
925S137-43	0.0451	33	0.560	1.90	5.941	3.258	0.096	0.414	5.612	1.053	20.80	17.93	120.5	905	905	0.379	1.688	-0.633	0.424	3.345	0.964	31.6
925S137-54	0.0566	33	0.698	2.37	7.352	3.246	0.116	0.407	7.175	1.396	27.58	24.98	173.7	1800	1800	0.745	2.055	-0.623	0.418	3.330	0.965	31.3
925S137-54	0.0566	50	0.698	2.37	7.352	3.246	0.116	0.407	6.993	1.274	38.15	32.44	281.6	1800	1800	0.745	2.055	-0.623	0.418	3.330	0.965	25.4
925S137-68	0.0713	33	0.871	2.96	9.084	3.229	0.138	0.398	9.084	1.846	36.47	34.66	204.2	3628	3483	1.476	2.491	-0.609	0.410	3.310	0.966	30.9
925S137-68	0.0713	50	0.871	2.96	9.084	3.229	0.138	0.398	8.905	1.743	52.19	45.61	548.3	3628	3483	1.476	2.491	-0.609	0.410	3.310	0.966	25.1
925S137-97	0.1017	33	1.220	4.15	12.437	3.193	0.174	0.378	12.437	2.689	66.42	65.59	191.2	8843	5830	4.205	3.275	-0.580	0.394	3.267	0.968	26.9
925S137-97	0.1017	50	1.220	4.15	12.437	3.193	0.174	0.378	12.437	2.637	78.95	75.31	698.6	10710	7061	4.205	3.275	-0.580	0.394	3.267	0.968	24.4
925S162-43	0.0451	33	0.593	2.02	6.616	3.339	0.165	0.528	6.288	1.196	23.64	21.01	82.0	905	905	0.402	2.877	-0.859	0.564	3.488	0.939	39.2
925S162-54	0.0566	33	0.740	2.52	8.198	3.328	0.201	0.521	8.019	1.576	31.15	28.91	110.6	1800	1800	0.791	3.521	-0.848	0.558	3.473	0.940	38.9
925S162-54	0.0566	50	0.740	2.52	8.198	3.328	0.201	0.521	7.841	1.443	43.22	37.67	200.2	1800	1800	0.791	3.521	-0.848	0.558	3.473	0.940	31.6
925S162-68	0.0713	33	0.925	3.15	10.148	3.313	0.242	0.512	10.148	2.074	40.98	39.62	112.4	3628	3483	1.567	4.293	-0.833	0.550	3.454	0.942	38.6
925S162-68	0.0713	50	0.925	3.15	10.148	3.313	0.242	0.512	9.965	1.970	58.99	52.30	407.3	3628	3483	1.567	4.293	-0.833	0.550	3.454	0.942	31.3
925S162-97	0.1017	33	1.296	4.41	13.947	3.280	0.315	0.493	13.947	3.016	59.59	59.59	0.0	8843	5830	4.468	5.719	-0.802	0.533	3.413	0.945	38.0
925S162-97	0.1017	50	1.296	4.41	13.947	3.280	0.315	0.493	13.947	2.962	88.70	85.01	511.8	10710	7061	4.468	5.719	-0.802	0.533	3.413	0.945	30.8
925S200-43	0.0451	33	0.639	2.17	7.519	3.431	0.303	0.689	7.204	1.351	26.70	24.28	58.8	905	905	0.433	5.240	-1.193	0.767	3.697	0.896	49.7
925S200-54	0.0566	33	0.797	2.71	9.329	3.422	0.371	0.682	9.147	1.818	35.92	33.17	108.9	1800	1800	0.851	6.438	-1.180	0.761	3.683	0.897	49.5
925S200-54	0.0566	50	0.797	2.71	9.329	3.422	0.371	0.682	9.009	1.567	46.91	43.27	96.7	1800	1800	0.851	6.438	-1.180	0.761	3.683	0.897	40.1
925S200-68	0.0713	33	0.996	3.39	11.568	3.408	0.451	0.673	11.568	2.379	47.00	45.16	120.0	3628	3483	1.688	7.893	-1.164	0.752	3.664	0.899	49.2
925S200-68	0.0713	50	0.996	3.39	11.568	3.408	0.451	0.673	11.398	2.217	66.36	59.62	311.6	3628	3483	1.688	7.893	-1.164	0.752	3.664	0.899	39.9
925S200-97	0.1017	33	1.398	4.76	15.963	3.379	0.598	0.654	15.963	3.451	68.20	68.20	0.0	8843	5830	4.819	10.637	-1.131	0.735	3.623	0.902	48.7
925S200-97	0.1017	50	1.398	4.76	15.963	3.379	0.598	0.654	15.963	3.397	101.71	96.01	604.2	10710	7061	4.819	10.637	-1.131	0.735	3.623	0.902	39.4
925S250-43	0.0451	33	0.684	2.33	8.474	3.521	0.520	0.872	8.474	1.502	29.69	25.61	93.6	905	905	0.464	8.801	-1.573	0.993	3.953	0.842	61.0
925S250-54	0.0566	33	0.853	2.90	10.525	3.512	0.640	0.866	10.525	2.096	41.42	35.09	247.8	1800	1800	0.911	10.847	-1.559	0.986	3.939	0.843	60.8
925S250-54	0.0566	50	0.853	2.90	10.525	3.512	0.640	0.866	10.469	1.746	52.27	45.48	170.9	1800	1800	0.911	10.847	-1.559	0.986	3.939	0.843	49.3
925S250-68	0.0713	33	1.067	3.63	13.070	3.499	0.783	0.856	13.070	2.714	59.09	51.17	466.9	3628	3483	1.809	13.349	-1.542	0.977	3.919	0.845	57.7
925S250-68	0.0713	50	1.067	3.63	13.070	3.499	0.783	0.856	13.031	2.529	75.73	62.82	577.3	3628	3483	1.809	13.349	-1.542	0.977	3.919	0.845	49.1
925S250-97	0.1017	33	1.499	5.10	18.090	3.473	1.050	0.837	18.090	3.903	88.17	83.89	508.7	8843	5830	5.170	18.137	-1.507	0.959	3.878	0.849	56.2
925S250-97	0.1017	50	1.499	5.10	18.090	3.473	1.050	0.837	18.090	3.742	125.86	110.18	1352.2	10710	7061	5.170	18.137	-1.507	0.959	3.878	0.849	45.9
925S300-54	0.0566	33	0.910	3.10	11.721	3.589	1.001	1.049	11.573	2.155	42.57	36.33	211.0	1800	1800	0.972	16.691	-1.956	1.216	4.219	0.785	71.8
925S300-54	0.0566	50	0.910	3.10	11.721	3.589	1.001	1.049	11.135	1.764	52.83	46.81	135.2	1800	1800	0.972	16.691	-1.956	1.216	4.219	0.785	58.3
925S300-68	0.0713	33	1.139	3.87	14.572	3.577	1.231	1.040	14.520	2.833	55.98	49.90	322.6	3628	3483	1.930	20.596	-1.938	1.207	4.199	0.787	71.6
925S300-68	0.0713	50	1.139	3.87	14.572	3.577	1.231	1.040	14.158	2.610	78.14	64.83	522.4	3628	3483	1.930	20.596	-1.938	1.207	4.199	0.787	58.0
925S300-97	0.1017	33	1.601	5.45	20.218	3.553	1.665	1.020	20.218	4.194	92.84	86.63	642.6	8843	5830	5.520	28.138	-1.901	1.188	4.157	0.791	67.2
925S300-97	0.1017	50	1.601	5.45	20.218	3.553	1.665	1.020	19.928	4.035	120.79	105.96	1218.0	10710	7061	5.520	28.138	-1.901	1.188	4.157	0.791	57.6
1000S137-33[1]	0.0346	33	0.457	1.55	5.589	3.498	0.077	0.409								0.182	1.587	-0.614	0.413	3.575	0.971	
1000S137-43[1]	0.0451	33	0.593	2.02	7.232	3.491	0.097	0.405	6.727	1.147	22.66	19.09	131.6	836	836	0.402	2.014	-0.605	0.408	3.566	0.971	31.2
1000S137-54	0.0566	33	0.740	2.52	8.956	3.478	0.117	0.398	8.636	1.526	30.15	26.78	197.0	1661	1661	0.791	2.454	-0.595	0.402	3.551	0.972	30.9
1000S137-54	0.0566	50	0.740	2.52	8.956	3.478	0.117	0.398	8.393	1.389	41.58	34.61	303.5	1661	1661	0.791	2.454	-0.595	0.402	3.551	0.972	25.1
1000S137-68	0.0713	33	0.925	3.15	11.076	3.461	0.140	0.389	11.010	2.029	40.09	37.42	259.3	3345	3345	1.567	2.975	-0.581	0.394	3.531	0.973	30.5
1000S137-68	0.0713	50	0.925	3.15	11.076	3.461	0.140	0.389	10.732	1.908	57.13	48.96	593.2	3345	3345	1.567	2.975	-0.581	0.394	3.531	0.973	24.8
1000S137-97	0.1017	33	1.296	4.41	15.192	3.424	0.177	0.369	15.192	3.038	60.04	60.04	0.0	8843	6434	4.468	3.913	-0.554	0.379	3.488	0.975	29.8
1000S137-97	0.1017	50	1.296	4.41	15.192	3.424	0.177	0.369	15.192	2.917	87.32	81.79	900.4	9864	7177	4.468	3.913	-0.554	0.379	3.488	0.975	24.1
1000S162-33[1]	0.0346	33	0.483	1.64	6.198	3.583	0.132	0.522								0.193	2.692	-0.833	0.550	3.716	0.950	
1000S162-43[1]	0.0451	33	0.627	2.13	8.025	3.577	0.168	0.518	7.523	1.302	25.74	22.49	87.8	836	836	0.425	3.430	-0.823	0.545	3.707	0.951	38.8
1000S162-54	0.0566	33	0.783	2.66	9.950	3.565	0.204	0.511	9.627	1.722	34.02	31.11	123.7	1661	1661	0.836	4.198	-0.812	0.538	3.692	0.952	38.6
1000S162-54	0.0566	50	0.783	2.66	9.950	3.565	0.204	0.511	9.391	1.572	47.07	40.37	210.7	1661	1661	0.836	4.198	-0.812	0.538	3.692	0.952	31.3
1000S162-68	0.0713	33	0.978	3.33	12.325	3.550	0.246	0.502	12.256	2.276	44.98	42.91	145.3	3345	3345	1.658	5.121	-0.798	0.531	3.673	0.953	38.2
1000S162-68	0.0713	50	0.978	3.33	12.325	3.550	0.246	0.502	11.978	2.154	64.51	56.35	427.6	3345	3345	1.658	5.121	-0.798	0.531	3.673	0.953	31.0
1000S162-97	0.1017	33	1.372	4.67	16.967	3.516	0.320	0.483	16.967	3.393	67.06	67.06	0.0	8843	6434	4.731	6.827	-0.768	0.514	3.631	0.955	37.5
1000S162-97	0.1017	50	1.372	4.67	16.967	3.516	0.320	0.483	16.967	3.269	97.89	92.55	625.9	9864	7177	4.731	6.827	-0.768	0.514	3.631	0.955	30.4
1000S200-33[1]	0.0346	33	0.517	1.76	7.013	3.682	0.241	0.682								0.206	4.876	-1.157	0.749	3.919	0.913	
1000S200-43[1]	0.0451	33	0.672	2.29	9.085	3.676	0.309	0.677	8.602	1.470	29.05	26.15	60.5	836	836	0.456	6.236	-1.147	0.743	3.910	0.914	49.3
1000S200-54	0.0566	33	0.839	2.86	11.278	3.666	0.378	0.671	10.953	1.984	39.20	35.86	112.1	1661	1661	0.896	7.665	-1.135	0.737	3.896	0.915	49.1
1000S200-54	0.0566	50	0.839	2.86	11.278	3.666	0.378	0.671	10.769	1.705	51.05	46.62	101.4	1661	1661	0.896	7.665	-1.135	0.737	3.896	0.915	39.8
1000S200-68	0.0713	33	1.050	3.57	13.994	3.652	0.460	0.662	13.920	2.607	51.51	49.07	133.8	3345	3345	1.779	9.401	-1.120	0.729	3.876	0.917	48.8
1000S200-68	0.0713	50	1.050	3.57	13.994	3.652	0.460	0.662	13.665	2.420	72.46	64.50	313.6	3345	3345	1.779	9.401	-1.120	0.729	3.876	0.917	39.6
1000S200-97	0.1017	33	1.474	5.02	19.336	3.622	0.609	0.643	19.336	3.867	76.42	76.42	0.0	8843	6434	5.082	12.679	-1.088	0.711	3.836	0.920	48.2
1000S200-97	0.1017	50	1.474	5.02	19.336	3.622	0.609	0.643	19.336	3.741	112.00	104.73	648.0	9864	7177	5.082	12.679	-1.088	0.711	3.836	0.920	39.0
1000S250-33[1]	0.0346	33	0.552	1.88	7.872	3.777	0.413	0.865								0.220	8.173	-1.528	0.971	4.165	0.865	
1000S250-43[1]	0.0451	33	0.717	2.44	10.203	3.771	0.531	0.860	10.203	1.617	31.95	27.67	82.5	836	836	0.486	10.481	-1.518	0.965	4.155	0.867	60.7
1000S250-54	0.0566	33	0.896	3.05	12.677	3.762	0.653	0.854	12.677	2.277	44.99	38.02	228.6	1661	1661	0.957	12.922	-1.505	0.958	4.140	0.868	60.5
1000S250-54	0.0566	50	0.896	3.05	12.677	3.762	0.653	0.854	12.660	1.879	56.26	49.16	151.1	1661	1661	0.957	12.922	-1.505	0.958	4.140	0.868	49.1
1000S250-68	0.0713	33	1.121	3.81	15.751	3.749	0.799	0.844	15.751	3.028	65.93	55.62	533.9	3345	3345	1.899	15.909	-1.488	0.950	4.121	0.870	57.3
1000S250-68	0.0713	50	1.121	3.81	15.751	3.749	0.799	0.844	15.741	2.768	82.89	68.13	563.4	3345	3345	1.899	15.909	-1.488	0.950	4.121	0.870	48.8
1000S250-97	0.1017	33	1.576	5.36	21.827	3.722	1.072	0.825	21.827	4.357	98.41	91.77	684.2	8843	6434	5.433	21.632	-1.454	0.932	4.080	0.873	55.8
1000S250-97	0.1017	50	1.576	5.36	21.827	3.722	1.072	0.825	21.827	4.181	140.63	120.13	1551.1	9864	7177	5.433	21.632	-1.454	0.932	4.080	0.873	45.6
1000S300-54	0.0566	33	0.953	3.24	14.076	3.844	1.024	1.037	13.938	2.312	45.69	39.41	176.4	1661	1661	1.017	19.888	-1.892	1.185	4.408	0.816	71.5
1000S300-54	0.0566	50	0.953	3.24	14.076	3.844	1.024	1.037	13.440	1.902	56.96	50.69	119.5	1661	1661	1.017	19.888	-1.892	1.185	4.408	0.816	58.1
1000S300-68	0.0713	33	1.192	4.06	17.509	3.832	1.258	1.027	17.441	3.158	62.41	54.29	377.6	3345	3345	2.020	24.551	-1.874	1.176	4.388	0.818	71.3
1000S300-68	0.0713	50	1.192	4.06	17.509	3.832	1.258	1.027	17.099	2.802	83.89	70.39	442.2	3345	3345	2.020	24.551	-1.874	1.176	4.388	0.818	57.8
1000S300-97	0.1017	33	1.677	5.71	24.318	3.808	1.702	1.007	24.318	4.671	103.39	94.70	781.7	8843	6434	5.783	33.570	-1.838	1.158	4.346	0.821	66.9
1000S300-97	0.1017	50	1.677	5.71	24.318	3.808	1.702	1.007	23.970	4.499	134.69	115.62	1371.3	9864	7177	5.783	33.570	-1.838	1.158	4.346	0.821	57.4
1150S137-43[1]	0.0451	33	0.661	2.25	10.325	3.952	0.100	0.388	9.301	1.334	26.36	21.19	155.6	725	725	0.448	2.764	-0.556	0.379	4.010	0.981	30.5
1150S137-54	0.0566	33	0.825	2.81	12.800	3.938	0.120	0.381	12.025	1.786	35.30	30.04	245.3	1439	1439	0.881	3.369	-0.546	0.373	3.994	0.981	30.2
1150S137-54	0.0566	50	0.825	2.81	12.800	3.938	0.120	0.381	11.627	1.617	48.43	38.54	352.0	1439	1439	0.881	3.369	-0.546	0.373	3.994	0.981	24.5
1150S137-68	0.0713	33	1.032	3.51	15.854	3.920	0.143	0.372	15.463	2.396	47.34	42.51	365.8	2895	2895	1.748	4.085	-0.534	0.366	3.974	0.982	29.8
1150S137-68	0.0713	50	1.032	3.51	15.854	3.920	0.143	0.372	14.977	2.238	67.01	55.10	689.8	2895	2895	1.748	4.085	-0.534	0.366	3.974	0.982	24.2
1150S137-97	0.1017	33	1.449	4.93	21.817	3.881	0.181	0.353	21.817	3.687	72.87	70.77	365.9	8518	7361	4.994	5.379	-0.508	0.352	3.930	0.983	28.9
1150S137-97	0.1017	50	1.449	4.93	21.817	3.881	0.181	0.353	21.738	3.478	104.13	93.92	1261.0	8518	7361	4.994	5.379	-0.508	0.352	3.930	0.983	23.5
1150S162-43[1]	0.0451	33	0.695	2.36	11.383	4.047	0.173	0.499	10.366	1.514	29.92	25.15	102.1	725	725	0.471	4.703	-0.761	0.509	4.148	0.966	38.1
1150S162-54	0.0566	33	0.868	2.95	14.126	4.035	0.210	0.492	13.350	2.012	39.76	35.14	153.2	1439	1439	0.927	5.759	-0.750	0.503	4.134	0.967	37.8
1150S162-54	0.0566	50	0.868	2.95	14.126	4.035	0.210	0.492	12.964	1.829	54.75	45.26	237.9	1439	1439	0.927	5.759	-0.750	0.503	4.134	0.967	30.7
1150S162-68	0.0713	33	1.085	3.69	17.521	4.018	0.253	0.483	17.124	2.681	52.99	49.05	211.6	2895	2895	1.839	7.028	-0.737	0.496	4.114	0.968	37.4
1150S162-68	0.0713	50	1.085	3.69	17.521	4.018	0.253	0.483	16.642	2.523	75.52	63.83	479.7	2895	2895	1.839	7.028	-0.737	0.496	4.114	0.968	30.4
1150S162-97	0.1017	33	1.525	5.19	24.186	3.983	0.329	0.464	24.186	4.098	80.97	80.16	101.5	8518	7361	5.257	9.379	-0.709	0.480	4.072	0.970	36.7

SECTION PROPERTIES

Structural Stud Section Properties

			Gross Properties						Effective Properties							Torsional Properties						
Section	Design Thickness (in)	Fy (Yield) (ksi)	Area (in2)	Weight (lb/ft)	Ixx (in4)	Rx (in)	Iyy (in4)	Ry (in)	Ixx (in4)	Sxx (in3)	Ma-L (in-k)	Ma-D (in-k)	$K_{\Phi c}$ (in-lb/in)	Vag (lb)	VaNet (lb)	Jx1000 (in4)	Cw (in6)	Xo (in)	m (in)	Ro (in)	b	Lu (in)
1150S162-97	0.1017	50	1.525	5.19	24.186	3.983	0.329	0.464	24.098	3.885	116.33	106.81	843.5	8518	7361	5.257	9.379	-0.709	0.480	4.072	0.970	29.7
1150S200-43[1]	0.0451	33	0.740	2.52	12.796	4.158	0.319	0.656	11.815	1.708	33.75	29.59	66.8	725	725	0.502	8.534	-1.067	0.700	4.343	0.940	48.6
1150S200-54	0.0566	33	0.924	3.14	15.896	4.147	0.390	0.650	15.121	2.315	45.75	40.90	123.6	1439	1439	0.987	10.494	-1.056	0.694	4.328	0.941	48.3
1150S200-54	0.0566	50	0.924	3.14	15.896	4.147	0.390	0.650	14.823	1.981	59.31	52.82	115.6	1439	1439	0.987	10.494	-1.056	0.694	4.328	0.941	39.2
1150S200-68	0.0713	33	1.156	3.94	19.747	4.132	0.475	0.641	19.342	3.063	60.53	56.49	165.4	2895	2895	1.960	12.878	-1.041	0.686	4.309	0.942	48.0
1150S200-68	0.0713	50	1.156	3.94	19.747	4.132	0.475	0.641	18.904	2.827	84.65	73.68	330.5	2895	2895	1.960	12.878	-1.041	0.686	4.309	0.942	38.9
1150S200-97	0.1017	33	1.627	5.53	27.348	4.100	0.629	0.622	27.348	4.645	91.79	91.10	64.7	8518	7361	5.608	17.390	-1.010	0.669	4.268	0.944	47.3
1150S200-97	0.1017	50	1.627	5.53	27.348	4.100	0.629	0.622	27.250	4.430	132.63	121.51	737.5	8518	7361	5.608	17.390	-1.010	0.669	4.268	0.944	38.3
1150S250-43[1]	0.0451	33	0.785	2.67	14.275	4.264	0.550	0.837	13.394	1.766	34.90	31.58	45.5	725	725	0.532	14.361	-1.419	0.915	4.571	0.904	60.0
1150S250-54	0.0566	33	0.981	3.34	17.749	4.254	0.676	0.830	17.089	2.371	46.85	43.64	67.6	1439	1439	1.047	17.713	-1.407	0.908	4.557	0.905	59.8
1150S250-54	0.0566	50	0.981	3.34	17.749	4.254	0.676	0.830	16.736	2.054	61.50	56.18	81.8	1439	1439	1.047	17.713	-1.407	0.908	4.557	0.905	48.5
1150S250-68	0.0713	33	1.228	4.18	22.075	4.240	0.827	0.821	21.712	3.334	65.87	60.33	198.7	2895	2895	2.081	21.822	-1.391	0.900	4.537	0.906	59.5
1150S250-68	0.0713	50	1.228	4.18	22.075	4.240	0.827	0.821	21.380	2.871	85.97	78.34	188.2	2895	2895	2.081	21.822	-1.391	0.900	4.537	0.906	48.3
1150S250-97	0.1017	33	1.728	5.88	30.651	4.211	1.110	0.801	30.651	5.217	103.10	97.82	440.4	8518	7361	5.959	29.711	-1.358	0.882	4.497	0.909	58.9
1150S250-97	0.1017	50	1.728	5.88	30.651	4.211	1.110	0.801	30.602	4.794	143.54	129.47	795.6	8518	7361	5.959	29.711	-1.358	0.882	4.497	0.909	47.7
1150S300-54	0.0566	33	1.037	3.53	19.602	4.347	1.063	1.012	19.520	2.629	51.96	45.42	134.3	1439	1439	1.108	27.282	-1.778	1.129	4.804	0.863	71.0
1150S300-54	0.0566	50	1.037	3.53	19.602	4.347	1.063	1.012	18.925	2.180	65.26	58.23	101.3	1439	1439	1.108	27.282	-1.778	1.129	4.804	0.863	57.6
1150S300-68	0.0713	33	1.299	4.42	24.403	4.334	1.306	1.003	24.297	3.850	76.07	62.91	488.6	2895	2895	2.201	33.700	-1.761	1.120	4.784	0.865	70.7
1150S300-68	0.0713	50	1.299	4.42	24.403	4.334	1.306	1.003	23.914	3.188	95.44	81.27	341.5	2895	2895	2.201	33.700	-1.761	1.120	4.784	0.865	57.4
1150S300-97	0.1017	33	1.830	6.23	33.954	4.307	1.767	0.983	33.954	5.681	125.76	110.76	1060.9	8518	7361	6.309	46.143	-1.726	1.102	4.743	0.868	66.2
1150S300-97	0.1017	50	1.830	6.23	33.954	4.307	1.767	0.983	33.473	5.485	164.22	134.77	1687.7	8518	7361	6.309	46.143	-1.726	1.102	4.743	0.868	56.8
1200S137-33[1]	0.0346	33	0.526	1.79	8.893	4.112	0.079	0.387								0.210	2.398	-0.549	0.375	4.167	0.983	
1200S137-43[1]	0.0451	33	0.684	2.33	11.517	4.104	0.100	0.383								0.464	3.043	-0.542	0.370	4.158	0.983	
1200S137-54[1]	0.0566	33	0.853	2.90	14.283	4.091	0.121	0.376	13.296	1.873	37.01	31.04	261.6	1377	1377	0.911	3.709	-0.532	0.365	4.142	0.984	30.0
1200S137-54[1]	0.0566	50	0.853	2.90	14.283	4.091	0.121	0.376	12.836	1.694	50.71	39.74	368.8	1377	1377	0.911	3.709	-0.532	0.365	4.142	0.984	24.3
1200S137-68	0.0713	33	1.067	3.63	17.698	4.072	0.144	0.367	17.142	2.518	49.76	44.09	400.1	2771	2771	1.809	4.499	-0.520	0.358	4.121	0.984	29.5
1200S137-68	0.0713	50	1.067	3.63	17.698	4.072	0.144	0.367	16.572	2.348	70.30	56.99	722.8	2771	2771	1.809	4.499	-0.520	0.358	4.121	0.984	24.0
1200S137-97	0.1017	33	1.499	5.10	24.379	4.032	0.182	0.348	24.379	3.899	77.04	73.94	493.8	8147	7411	5.170	5.925	-0.494	0.343	4.077	0.985	28.7
1200S137-97	0.1017	50	1.499	5.10	24.379	4.032	0.182	0.348	24.161	3.666	109.75	97.73	1369.7	8147	7411	5.170	5.925	-0.494	0.343	4.077	0.985	23.2
1200S162-33[1]	0.0346	33	0.552	1.88	9.780	4.210	0.136	0.497								0.220	4.061	-0.751	0.504	4.305	0.970	
1200S162-43[1]	0.0451	33	0.717	2.44	12.672	4.203	0.174	0.493								0.486	5.177	-0.742	0.499	4.296	0.970	
1200S162-54[1]	0.0566	33	0.896	3.05	15.730	4.190	0.212	0.486	14.743	2.109	41.68	36.38	163.7	1377	1377	0.957	6.340	-0.732	0.493	4.281	0.971	37.5
1200S162-54[1]	0.0566	50	0.896	3.05	15.730	4.190	0.212	0.486	14.298	1.914	57.31	46.76	248.3	1377	1377	0.957	6.340	-0.732	0.493	4.281	0.971	30.5
1200S162-68	0.0713	33	1.121	3.81	19.518	4.173	0.255	0.477	18.955	2.817	55.66	50.96	233.9	2771	2771	1.899	7.739	-0.719	0.485	4.261	0.972	37.2
1200S162-68	0.0713	50	1.121	3.81	19.518	4.173	0.255	0.477	18.390	2.645	79.19	66.14	499.5	2771	2771	1.899	7.739	-0.719	0.485	4.261	0.972	30.2
1200S162-97	0.1017	33	1.576	5.36	26.966	4.137	0.331	0.459	26.966	4.327	85.51	83.86	188.7	8147	7411	5.433	10.331	-0.691	0.470	4.219	0.973	36.4
1200S162-97	0.1017	50	1.576	5.36	26.966	4.137	0.331	0.459	26.735	4.091	122.49	111.30	915.0	8147	7411	5.433	10.331	-0.691	0.470	4.219	0.973	29.5
1200S200-33[1]	0.0346	33	0.586	2.00	10.965	4.324	0.251	0.654								0.234	7.338	-1.052	0.693	4.498	0.945	
1200S200-43[1]	0.0451	33	0.763	2.59	14.214	4.317	0.322	0.649								0.517	9.391	-1.043	0.687	4.489	0.946	
1200S200-54[1]	0.0566	33	0.953	3.24	17.662	4.306	0.393	0.643	16.678	2.425	47.93	42.46	128.6	1377	1377	1.017	11.550	-1.032	0.681	4.474	0.947	48.0
1200S200-54[1]	0.0566	50	0.953	3.24	17.662	4.306	0.393	0.643	16.334	2.073	62.07	54.74	121.4	1377	1377	1.017	11.550	-1.032	0.681	4.474	0.947	39.0
1200S200-68	0.0713	33	1.192	4.06	21.947	4.291	0.479	0.634	21.376	3.215	63.54	58.83	177.1	2771	2771	2.020	14.176	-1.017	0.673	4.455	0.948	47.7
1200S200-68	0.0713	50	1.192	4.06	21.947	4.291	0.479	0.634	20.864	2.963	88.71	76.55	339.1	2771	2771	2.020	14.176	-1.017	0.673	4.455	0.948	38.7
1200S200-97	0.1017	33	1.677	5.71	30.417	4.258	0.635	0.615	30.417	4.899	96.81	95.43	116.8	8147	7411	5.783	19.150	-0.987	0.656	4.414	0.950	47.0
1200S200-97	0.1017	50	1.677	5.71	30.417	4.258	0.635	0.615	30.175	4.660	139.51	126.87	770.1	8147	7411	5.783	19.150	-0.987	0.656	4.414	0.950	38.1
1200S250-33[1]	0.0346	33	0.621	2.11	12.203	4.433	0.432	0.834								0.248	12.322	-1.400	0.905	4.723	0.912	
1200S250-43[1]	0.0451	33	0.808	2.75	15.825	4.426	0.556	0.829								0.548	15.812	-1.390	0.899	4.713	0.913	
1200S250-54[1]	0.0566	33	1.009	3.43	19.681	4.416	0.683	0.823	18.832	2.482	49.05	45.43	70.3	1377	1377	1.078	19.505	-1.378	0.892	4.699	0.914	59.6
1200S250-54[1]	0.0566	50	1.009	3.43	19.681	4.416	0.683	0.823	18.433	2.149	64.34	58.39	84.6	1377	1377	1.078	19.505	-1.378	0.892	4.699	0.914	48.3
1200S250-68	0.0713	33	1.263	4.30	24.484	4.402	0.836	0.813	23.963	3.496	69.08	62.95	201.9	2771	2771	2.141	24.034	-1.362	0.884	4.679	0.915	59.2
1200S250-68	0.0713	50	1.263	4.30	24.484	4.402	0.836	0.813	23.575	3.007	90.04	81.59	192.6	2771	2771	2.141	24.034	-1.362	0.884	4.679	0.915	48.1
1200S250-97	0.1017	33	1.779	6.05	34.016	4.373	1.121	0.794	34.016	5.496	108.60	102.52	461.6	8147	7411	6.134	32.734	-1.329	0.867	4.639	0.918	58.6
1200S250-97	0.1017	50	1.779	6.05	34.016	4.373	1.121	0.794	33.835	5.037	150.82	135.37	801.7	8147	7411	6.134	32.734	-1.329	0.867	4.639	0.918	47.5
1200S300-54[1]	0.0566	33	1.066	3.63	21.699	4.512	1.074	1.004	21.648	2.736	54.06	47.36	125.6	1377	1377	1.138	30.051	-1.743	1.111	4.940	0.876	70.8
1200S300-54[1]	0.0566	50	1.066	3.63	21.699	4.512	1.074	1.004	21.043	2.272	68.04	60.65	98.0	1377	1377	1.138	30.051	-1.743	1.111	4.940	0.876	57.4
1200S300-68	0.0713	33	1.335	4.54	27.020	4.499	1.320	0.994	26.918	4.064	80.30	65.72	500.9	2771	2771	2.262	37.126	-1.726	1.103	4.921	0.877	70.5
1200S300-68	0.0713	50	1.335	4.54	27.020	4.499	1.320	0.994	26.510	3.317	99.32	84.79	320.0	2771	2771	2.262	37.126	-1.726	1.103	4.921	0.877	57.2
1200S300-97	0.1017	33	1.881	6.40	37.616	4.472	1.786	0.974	37.616	6.035	133.59	116.06	1156.6	8147	7411	6.484	50.853	-1.691	1.085	4.880	0.880	66.0
1200S300-97	0.1017	50	1.881	6.40	37.616	4.472	1.786	0.974	37.085	5.831	174.57	141.05	1798.3	8147	7411	6.484	50.853	-1.691	1.085	4.880	0.880	56.7
1350S137-54[1]	0.0566	33	0.938	3.19	19.386	4.545	0.123	0.362	17.546	2.133	42.14	33.82	309.7	1221	1221	1.002	4.839	-0.493	0.341	4.586	0.988	29.3
1350S137-54[1]	0.0566	50	0.938	3.19	19.386	4.545	0.123	0.362	16.866	1.922	57.54	43.07	419.8	1221	1221	1.002	4.839	-0.493	0.341	4.586	0.988	23.8
1350S137-68	0.0713	33	1.174	4.00	24.050	4.526	0.147	0.353	22.783	2.885	57.02	48.52	498.0	2455	2455	1.990	5.870	-0.482	0.334	4.565	0.989	28.8
1350S137-68	0.0713	50	1.174	4.00	24.050	4.526	0.147	0.353	21.907	2.677	80.15	62.28	820.1	2455	2455	1.990	5.870	-0.482	0.334	4.565	0.989	23.4
1350S137-97	0.1017	33	1.652	5.62	33.215	4.484	0.185	0.335	33.215	4.535	89.62	82.98	828.3	7206	7206	5.696	7.735	-0.458	0.321	4.520	0.990	27.9
1350S137-97	0.1017	50	1.652	5.62	33.215	4.484	0.185	0.335	32.333	4.229	126.61	108.55	1660.4	7206	7206	5.696	7.735	-0.458	0.321	4.520	0.990	22.7
1350S162-54[1]	0.0566	33	0.981	3.34	21.228	4.652	0.216	0.469	19.394	2.399	47.41	39.80	196.2	1221	1221	1.047	8.273	-0.682	0.463	4.725	0.979	36.8
1350S162-54[1]	0.0566	50	0.981	3.34	21.228	4.652	0.216	0.469	18.737	2.170	64.98	50.87	281.7	1221	1221	1.047	8.273	-0.682	0.463	4.725	0.979	29.9
1350S162-68	0.0713	33	1.228	4.18	26.368	4.634	0.261	0.461	25.092	3.222	63.66	56.30	301.0	2455	2455	2.081	10.101	-0.669	0.456	4.705	0.980	36.4
1350S162-68	0.0713	50	1.228	4.18	26.368	4.634	0.261	0.461	24.228	3.012	90.19	72.57	563.6	2455	2455	2.081	10.101	-0.669	0.456	4.705	0.980	29.6
1350S162-97	0.1017	33	1.728	5.88	36.510	4.596	0.338	0.442	36.510	5.018	99.15	94.38	431.4	7206	7206	5.959	13.494	-0.643	0.441	4.662	0.981	35.6
1350S162-97	0.1017	50	1.728	5.88	36.510	4.596	0.338	0.442	35.611	4.709	140.98	123.98	1127.1	7206	7206	5.959	13.494	-0.643	0.441	4.662	0.981	28.9
1350S200-54[1]	0.0566	33	1.037	3.53	23.688	4.778	0.403	0.623	21.864	2.756	54.46	46.83	146.3	1221	1221	1.108	15.066	-0.966	0.644	4.915	0.961	47.3
1350S200-54[1]	0.0566	50	1.037	3.53	23.688	4.778	0.403	0.623	21.358	2.348	70.31	60.04	141.4	1221	1221	1.108	15.066	-0.966	0.644	4.915	0.961	38.4
1350S200-68	0.0713	33	1.299	4.42	29.461	4.762	0.491	0.615	28.180	3.672	72.55	65.43	215.1	2455	2455	2.201	18.498	-0.952	0.636	4.895	0.962	46.9
1350S200-68	0.0713	50	1.299	4.42	29.461	4.762	0.491	0.615	27.397	3.369	100.88	84.60	371.7	2455	2455	2.201	18.498	-0.952	0.636	4.895	0.962	38.1
1350S200-97	0.1017	33	1.830	6.23	40.907	4.728	0.650	0.596	40.905	5.662	111.89	107.90	263.9	7206	7206	6.309	25.008	-0.923	0.620	4.854	0.964	46.2
1350S200-97	0.1017	50	1.830	6.23	40.907	4.728	0.650	0.596	39.991	5.350	160.18	142.15	877.0	7206	7206	6.309	25.008	-0.923	0.620	4.854	0.964	37.5
1350S250-54[1]	0.0566	33	1.094	3.72	26.245	4.898	0.701	0.801	24.632	2.816	55.64	50.50	80.8	1221	1221	1.168	25.480	-1.296	0.849	5.129	0.936	58.8
1350S250-54[1]	0.0566	50	1.094	3.72	26.245	4.898	0.701	0.801	24.075	2.432	72.82	64.64	95.4	1221	1221	1.168	25.480	-1.296	0.849	5.129	0.936	47.8
1350S250-68	0.0713	33	1.370	4.66	32.675	4.883	0.858	0.791	31.477	3.983	78.70	70.45	216.7	2455	2455	2.322	31.409	-1.281	0.841	5.110	0.937	58.5
1350S250-68	0.0713	50	1.370	4.66	32.675	4.883	0.858	0.791	30.883	3.415	102.23	90.87	210.6	2455	2455	2.322	31.409	-1.281	0.841	5.110	0.937	47.5
1350S250-97	0.1017	33	1.932	6.57	45.471	4.852	1.151	0.772	45.457	6.332	125.12	116.23	525.4	7206	7206	6.660	42.816	-1.250	0.824	5.069	0.939	57.8
1350S250-97	0.1017	50	1.932	6.57	45.471	4.852	1.151	0.772	44.659	5.767	172.67	152.47	834.7	7206	7206	6.660	42.816	-1.250	0.824	5.069	0.939	46.9
1350S300-54[1]	0.0566	33	1.151	3.92	28.803	5.003	1.106	0.980	27.240	2.905	57.41	52.96	62.2	1221	1221	1.229	39.293	-1.647	1.062	5.358	0.906	70.1
1350S300-54[1]	0.0566	50	1.151	3.92	28.803	5.003	1.106	0.980	25.104	2.484	74.37	67.61	70.4	1221	1221	1.229	39.293	-1.647	1.062	5.358	0.906	57.0
1350S300-68	0.0713	33	1.442	4.91	35.890	4.989	1.358	0.971	34.869	4.072	80.46	73.89	148.7	2455	2455	2.443	48.565	-1.631	1.053	5.338	0.907	69.8
1350S300-68	0.0713	50	1.442	4.91	35.890	4.989	1.358	0.971	33.417	3.516	105.27	94.99	169.3	2455	2455	2.443	48.565	-1.631	1.053	5.338	0.907	56.7
1350S300-97	0.1017	33	2.033	6.92	50.035	4.961	1.838	0.951	50.035	6.743	133.25	122.23	568.7	7206	7206	7.010	66.580	-1.597	1.036	5.297	0.909	69.2
1350S300-97	0.1017	50	2.033	6.92	50.035	4.961	1.838	0.951	48.895	6.117	183.16	159.48	872.5	7206	7206	7.010	66.580	-1.597	1.036	5.297	0.909	56.1

SECTION PROPERTIES

Structural Stud Section Properties

			Gross Properties						Effective Properties							Torsional Properties						
Section	Design Thick-ness (in)	Fy (Yield) (ksi)	Area (in2)	Weight (lb/ft)	Ixx (in4)	Rx (in)	Iyy (in4)	Ry (in)	Ixx (in4)	Sxx (in3)	Ma-L (in-k)	Ma-D (in-k)	$K_{\Phi c}$ (in-lb/in)	Vag (lb)	VaNet (lb)	Jx1000 (in4)	Cw (in6)	Xo (in)	m (in)	Ro (in)	b	Lu (in)
1400S162-54[1]	0.0566	33	1.009	3.43	23.302	4.805	0.218	0.464	21.103	2.496	49.32	40.86	207.3	1177	1177	1.078	8.980	-0.667	0.454	4.873	0.981	36.6
1400S162-54[1]	0.0566	50	1.009	3.43	23.302	4.805	0.218	0.464	20.365	2.256	67.54	52.13	293.4	1177	1177	1.078	8.980	-0.667	0.454	4.873	0.981	29.7
1400S162-68	0.0713	33	1.263	4.30	28.952	4.787	0.262	0.456	27.357	3.357	66.33	57.96	323.3	2365	2365	2.141	10.966	-0.654	0.447	4.853	0.982	36.2
1400S162-68	0.0713	50	1.263	4.30	28.952	4.787	0.262	0.456	26.375	3.135	93.85	74.56	586.0	2365	2365	2.141	10.966	-0.654	0.447	4.853	0.982	29.4
1400S162-97	0.1017	33	1.779	6.05	40.115	4.748	0.340	0.437	39.965	5.248	103.71	97.70	507.2	6939	6939	6.134	14.651	-0.628	0.433	4.810	0.983	35.3
1400S162-97	0.1017	50	1.779	6.05	40.115	4.748	0.340	0.437	38.897	4.915	147.14	127.96	1196.5	6939	6939	6.134	14.651	-0.628	0.433	4.810	0.983	28.7
1400S200-54[1]	0.0566	33	1.066	3.63	25.951	4.935	0.406	0.617	23.767	2.866	56.63	48.18	152.9	1177	1177	1.138	16.355	-0.946	0.633	5.062	0.965	47.0
1400S200-54[1]	0.0566	50	1.066	3.63	25.951	4.935	0.406	0.617	23.199	2.440	73.05	61.67	148.6	1177	1177	1.138	16.355	-0.946	0.633	5.062	0.965	38.2
1400S200-68	0.0713	33	1.335	4.54	32.284	4.918	0.494	0.608	30.684	3.824	75.56	67.50	228.5	2365	2365	2.262	20.083	-0.932	0.625	5.043	0.966	46.7
1400S200-68	0.0713	50	1.335	4.54	32.284	4.918	0.494	0.608	29.797	3.505	104.93	87.10	384.3	2365	2365	2.262	20.083	-0.932	0.625	5.043	0.966	37.9
1400S200-97	0.1017	33	1.881	6.40	44.853	4.883	0.655	0.590	44.683	5.917	116.93	111.87	311.1	6939	6939	6.484	27.156	-0.904	0.609	5.001	0.967	45.9
1400S200-97	0.1017	50	1.881	6.40	44.853	4.883	0.655	0.590	43.616	5.580	167.07	146.98	915.4	6939	6939	6.484	27.156	-0.904	0.609	5.001	0.967	37.3
1400S250-54[1]	0.0566	33	1.122	3.82	28.702	5.057	0.707	0.794	26.758	2.927	57.83	52.08	84.9	1177	1177	1.198	27.675	-1.272	0.835	5.275	0.942	58.6
1400S250-54[1]	0.0566	50	1.122	3.82	28.702	5.057	0.707	0.794	26.141	2.527	75.65	66.58	99.7	1177	1177	1.198	27.675	-1.272	0.835	5.275	0.942	47.6
1400S250-68	0.0713	33	1.406	4.78	35.743	5.042	0.865	0.784	34.239	4.145	81.90	72.82	223.1	2365	2365	2.383	34.118	-1.257	0.827	5.255	0.943	58.3
1400S250-68	0.0713	50	1.406	4.78	35.743	5.042	0.865	0.784	33.565	3.550	106.29	93.79	218.0	2365	2365	2.383	34.118	-1.257	0.827	5.255	0.943	47.3
1400S250-97	0.1017	33	1.983	6.75	49.764	5.010	1.160	0.765	49.579	6.611	130.64	120.65	547.8	6939	6939	6.835	46.520	-1.225	0.811	5.214	0.945	57.6
1400S250-97	0.1017	50	1.983	6.75	49.764	5.010	1.160	0.765	48.650	6.010	179.95	157.94	850.3	6939	6939	6.835	46.520	-1.225	0.811	5.214	0.945	46.7
1400S300-54[1]	0.0566	33	1.179	4.01	31.453	5.165	1.115	0.972	29.581	3.019	59.66	54.74	64.4	1177	1177	1.259	42.690	-1.617	1.046	5.499	0.914	69.9
1400S300-54[1]	0.0566	50	1.179	4.01	31.453	5.165	1.115	0.972	27.227	2.580	77.25	69.82	72.7	1177	1177	1.259	42.690	-1.617	1.046	5.499	0.914	56.8
1400S300-68	0.0713	33	1.477	5.03	39.201	5.151	1.370	0.963	37.902	4.236	83.71	76.51	152.1	2365	2365	2.503	52.772	-1.601	1.038	5.480	0.915	69.6
1400S300-68	0.0713	50	1.477	5.03	39.201	5.151	1.370	0.963	36.290	3.655	109.42	98.25	172.7	2365	2365	2.503	52.772	-1.601	1.038	5.480	0.915	56.5
1400S300-97	0.1017	33	2.084	7.09	54.675	5.122	1.854	0.943	54.574	7.035	139.02	126.99	576.1	6939	6939	7.186	72.365	-1.568	1.020	5.439	0.917	68.9
1400S300-97	0.1017	50	2.084	7.09	54.675	5.122	1.854	0.943	53.226	6.372	190.78	165.45	871.5	6939	6939	7.186	72.365	-1.568	1.020	5.439	0.917	55.9

Section Property Table Notes

1. [1]Web-height to thickness ratio exceeds 200. Web Stiffeners are required at all support points and concentrated loads.
2. Effective properties include the strength increase from cold-work of forming per NASPEC section A7.2 where applicable. Where Allowable Moment, Ma is followed by '*', a stress increase from cold-work of forming has been applied.
3. For deflection determination, use the effective moment of inertia. Effective moment of inertia is based on Procedure 1 of the NASPEC.'
4. The effective moment of inertia for deflection is calculated at a stress which results in a section modulus such that the stress times the section modulus at that stress is equal to the allowable local buckling moment.
5. Tabulated gross properties are based on the full, unreduced section away from punchouts
6. Effective properties of all 'S' sections based on punched sections. Track sections are considered unpunched
7. For sections with properties listed for both 33 ksi and 50 ksi yield point, the required yield point should be specified in the design documents
8. Where effective properties are not listed for a section at 33 or 50 ksi yield, web depth-to-thickness or flange width-to-thickness limits from the NASPEC are exceeded. Only gross properties are available.
9. Where section designations include a superscript '1', web height-to-thickness exceeds 200. Web stiffeners are required at all supports and concentrated loads.
10. Section Properties meet the 2009 and 2012 International Building Code.

SECTION PROPERTIES

Structural Track Section Properties

			Gross Properties						Effective Properties Fy = 33 ksi				Effective Properties Fy = 50 ksi				Torsional Properties					
Section	Thick-ness (in)	Area (in2)	Weight (lb/ft)	Ixx (in4)	Sxx (in3)	Rx (in)	Iyy (in4)	Ry (in)	Ixx (in4)	Sxx (in3)	MaFy (in-k)	Va (lb)	Ixx (in4)	Sxx (in3)	MaFy (in-k)	Va (lb)	J (in4)	Cw (in6)	Xo (in)	m (in)	Ro (in)	y
162T125-43	0.0451	0.186	0.63	0.101	0.113	0.737	0.031	0.407	0.093	0.085	1.68	867					0.126	0.017	-0.863	0.496	1.206	0.488
162T125-54	0.0566	0.233	0.79	0.129	0.142	0.746	0.038	0.404	0.126	0.119	2.36	1079	0.120	0.109	3.270	1634	0.249	0.021	-0.856	0.492	1.205	0.496
162T125-68	0.0713	0.293	1.00	0.168	0.179	0.757	0.047	0.401	0.168	0.168	3.33	1339	0.166	0.155	4.650	2029	0.497	0.028	-0.846	0.487	1.205	0.506
162T125-97	0.1017	0.417	1.42	0.255	0.257	0.781	0.065	0.395	0.255	0.257	5.81	1853	0.255	0.257	7.700	2808	1.439	0.042	-0.827	0.475	1.204	0.528
162T150-43	0.0451	0.208	0.71	0.118	0.132	0.753	0.050	0.492	0.102	0.089	1.75	867					0.141	0.027	-1.091	0.617	1.414	0.405
162T150-54	0.0566	0.261	0.89	0.151	0.166	0.762	0.063	0.490	0.140	0.126	2.48	1079	0.132	0.114	3.420	1634	0.279	0.035	-1.083	0.613	1.412	0.411
162T150-68	0.0713	0.329	1.12	0.197	0.210	0.774	0.078	0.487	0.194	0.180	3.55	1339	0.185	0.164	4.910	2029	0.557	0.046	-1.073	0.607	1.410	0.421
162T150-97	0.1017	0.468	1.59	0.299	0.302	0.800	0.108	0.481	0.299	0.302	5.97	1853	0.299	0.283	8.480	2808	1.614	0.070	-1.053	0.596	1.407	0.440
162T200-33	0.0346	0.194	0.66	0.116	0.131	0.773	0.085	0.660	0.081	0.063	1.25	663					0.078	0.047	-1.565	0.865	1.866	0.297
162T200-43	0.0451	0.253	0.86	0.152	0.170	0.775	0.110	0.658	0.117	0.094	1.85	867					0.172	0.061	-1.559	0.862	1.861	0.298
162T200-54	0.0566	0.318	1.08	0.196	0.215	0.785	0.137	0.656	0.164	0.134	2.65	1079	0.153	0.121	3.620	1634	0.339	0.078	-1.551	0.858	1.858	0.303
162T200-68	0.0713	0.400	1.36	0.255	0.272	0.799	0.171	0.653	0.232	0.195	3.86	1339	0.218	0.176	5.260	2029	0.678	0.102	-1.540	0.852	1.854	0.310
162T200-97	0.1017	0.570	1.94	0.389	0.393	0.827	0.239	0.648	0.389	0.345	6.82	1853	0.373	0.313	9.380	2808	1.965	0.157	-1.519	0.840	1.846	0.323
250T125-33	0.0346	0.173	0.59	0.192	0.145	1.054	0.027	0.397	0.166	0.103	2.03	1024					0.069	0.033	-0.760	0.456	1.358	0.687
250T125-43	0.0451	0.225	0.77	0.250	0.188	1.055	0.035	0.395	0.231	0.147	2.91	1356					0.153	0.042	-0.755	0.453	1.356	0.690
250T125-54	0.0566	0.282	0.96	0.318	0.236	1.062	0.043	0.392	0.310	0.203	4.01	1692	0.297	0.188	5.640	2563	0.301	0.054	-0.749	0.449	1.357	0.696
250T125-68	0.0713	0.355	1.21	0.408	0.297	1.072	0.054	0.389	0.408	0.281	5.56	2111	0.402	0.262	7.850	3199	0.602	0.069	-0.740	0.444	1.360	0.704
250T125-97	0.1017	0.506	1.72	0.604	0.423	1.092	0.074	0.383	0.604	0.423	9.56	2954	0.604	0.423	12.670	4476	1.745	0.101	-0.724	0.434	1.365	0.719
250T150-33	0.0346	0.190	0.65	0.221	0.167	1.079	0.045	0.485	0.179	0.107	2.11	1024					0.076	0.054	-0.973	0.573	1.532	0.596
250T150-43	0.0451	0.248	0.84	0.289	0.217	1.080	0.058	0.483	0.252	0.154	3.03	1356					0.168	0.070	-0.968	0.570	1.529	0.599
250T150-54	0.0566	0.311	1.06	0.368	0.273	1.088	0.072	0.481	0.342	0.213	4.22	1692	0.325	0.197	5.890	2563	0.332	0.089	-0.961	0.566	1.529	0.605
250T150-68	0.0713	0.391	1.33	0.472	0.344	1.099	0.089	0.478	0.465	0.299	5.92	2111	0.445	0.276	8.270	3199	0.663	0.114	-0.953	0.561	1.531	0.613
250T150-97	0.1017	0.557	1.90	0.701	0.491	1.121	0.124	0.471	0.701	0.491	9.69	2954	0.701	0.463	13.860	4476	1.921	0.168	-0.935	0.550	1.534	0.629
250T200-33	0.0346	0.225	0.76	0.280	0.212	1.117	0.097	0.658	0.203	0.112	2.22	1024					0.090	0.118	-1.418	0.813	1.921	0.455
250T200-43	0.0451	0.293	1.00	0.366	0.275	1.118	0.126	0.657	0.288	0.163	3.21	1356					0.198	0.153	-1.413	0.810	1.918	0.457
250T200-54	0.0566	0.367	1.25	0.466	0.346	1.127	0.157	0.654	0.396	0.228	4.51	1692	0.371	0.209	6.250	2563	0.392	0.195	-1.405	0.806	1.917	0.462
250T200-68	0.0713	0.462	1.57	0.600	0.437	1.139	0.196	0.652	0.548	0.324	6.41	2111	0.517	0.296	8.860	3199	0.783	0.251	-1.396	0.800	1.916	0.469
250T200-97	0.1017	0.659	2.24	0.893	0.626	1.165	0.275	0.646	0.893	0.556	10.99	2954	0.856	0.510	15.270	4476	2.271	0.374	-1.376	0.789	1.915	0.484
250T250-43	0.0451	0.338	1.15	0.443	0.333	1.146	0.230	0.826	0.318	0.169	3.34	1356					0.229	0.283	-1.873	1.053	2.346	0.362
250T250-54	0.0566	0.424	1.44	0.565	0.419	1.155	0.287	0.824	0.440	0.238	4.70	1692	0.410	0.217	6.500	2563	0.453	0.361	-1.865	1.049	2.343	0.366
250T250-68	0.0713	0.534	1.82	0.728	0.530	1.168	0.360	0.821	0.616	0.341	6.74	2111	0.576	0.310	9.270	3199	0.904	0.466	-1.855	1.043	2.341	0.372
250T250-97	0.1017	0.761	2.59	1.086	0.761	1.195	0.506	0.815	1.028	0.596	11.79	2954	0.972	0.541	16.200	4476	2.622	0.696	-1.834	1.031	2.336	0.384
250T300-33	0.0346	0.294	1.00	0.398	0.301	1.164	0.290	0.993									0.117	0.360	-2.349	1.301	2.803	0.298
250T300-43	0.0451	0.383	1.30	0.521	0.391	1.166	0.376	0.991									0.260	0.470	-2.343	1.299	2.798	0.299
250T300-54	0.0566	0.480	1.63	0.664	0.492	1.176	0.470	0.989	0.477	0.245	4.85	1692	0.443	0.223	6.690	2563	0.513	0.599	-2.335	1.294	2.795	0.302
250T300-68	0.0713	0.605	2.06	0.856	0.623	1.189	0.589	0.987	0.674	0.353	6.98	2111	0.626	0.319	9.560	3199	1.025	0.773	-2.324	1.288	2.791	0.307
250T300-97	0.1017	0.862	2.93	1.279	0.896	1.218	0.830	0.981	1.144	0.625	12.35	2954	1.072	0.563	16.860	4476	2.973	1.158	-2.303	1.276	2.784	0.316
350T125-33	0.0346	0.207	0.71	0.405	0.222	1.397	0.030	0.379	0.354	0.165	3.27	1024					0.083	0.070	-0.668	0.414	1.594	0.824
350T125-43	0.0451	0.270	0.92	0.528	0.288	1.397	0.038	0.377	0.490	0.233	4.61	1739					0.183	0.090	-0.663	0.412	1.592	0.826
350T125-54	0.0566	0.339	1.15	0.668	0.361	1.404	0.048	0.375	0.651	0.317	6.26	2392	0.626	0.297	8.890	3372	0.362	0.114	-0.658	0.408	1.595	0.830
350T125-68	0.0713	0.427	1.45	0.851	0.454	1.412	0.059	0.372	0.851	0.433	8.55	2994	0.839	0.407	12.180	4536	0.723	0.144	-0.650	0.403	1.599	0.835
350T125-97	0.1017	0.608	2.07	1.243	0.645	1.430	0.081	0.366	1.243	0.645	14.56	4213	1.243	0.645	19.300	6383	2.096	0.209	-0.636	0.394	1.607	0.844
350T150-33	0.0346	0.225	0.76	0.461	0.253	1.432	0.049	0.469	0.382	0.171	3.39	1024					0.090	0.114	-0.866	0.527	1.738	0.752
350T150-43	0.0451	0.293	1.00	0.601	0.328	1.433	0.064	0.467	0.531	0.243	4.80	1739					0.198	0.148	-0.861	0.525	1.736	0.754
350T150-54	0.0566	0.367	1.25	0.761	0.412	1.440	0.079	0.465	0.712	0.332	6.57	2392	0.679	0.310	9.280	3372	0.392	0.187	-0.855	0.521	1.738	0.758
350T150-68	0.0713	0.462	1.57	0.972	0.518	1.450	0.099	0.462	0.957	0.459	9.07	2994	0.919	0.428	12.810	4536	0.783	0.238	-0.847	0.516	1.741	0.763
350T150-97	0.1017	0.659	2.24	1.422	0.738	1.469	0.136	0.455	1.422	0.738	14.58	4213	1.422	0.701	20.980	6383	2.271	0.346	-0.831	0.506	1.748	0.774
350T200-33	0.0346	0.259	0.88	0.574	0.315	1.487	0.108	0.647	0.428	0.181	3.57	1024					0.103	0.249	-1.285	0.761	2.069	0.614
350T200-43	0.0451	0.338	1.15	0.749	0.409	1.489	0.140	0.645	0.600	0.257	5.09	1739					0.229	0.323	-1.280	0.758	2.066	0.616
350T200-54	0.0566	0.424	1.44	0.949	0.513	1.496	0.175	0.642	0.814	0.355	7.01	2392	0.770	0.329	9.850	3372	0.453	0.409	-1.273	0.754	2.067	0.621
350T200-68	0.0713	0.534	1.82	1.213	0.647	1.508	0.218	0.639	1.112	0.496	9.80	2994	1.054	0.458	13.710	4536	0.904	0.522	-1.264	0.749	2.069	0.626
350T200-97	0.1017	0.761	2.59	1.780	0.923	1.530	0.305	0.633	1.779	0.831	16.41	4213	1.708	0.769	23.010	6383	2.622	0.765	-1.247	0.738	2.073	0.638
350T250-43	0.0451	0.383	1.30	0.896	0.490	1.530	0.257	0.819	0.659	0.268	5.29	1739					0.260	0.593	-1.719	0.996	2.443	0.505
350T250-54	0.0566	0.480	1.63	1.137	0.615	1.538	0.321	0.817	0.900	0.371	7.33	2392	0.846	0.343	10.260	3372	0.513	0.752	-1.712	0.992	2.442	0.509
350T250-68	0.0713	0.605	2.06	1.454	0.776	1.550	0.401	0.814	1.241	0.522	10.31	2994	1.168	0.479	14.350	4536	1.025	0.961	-1.703	0.987	2.443	0.514
350T250-97	0.1017	0.862	2.93	2.139	1.109	1.575	0.563	0.808	2.027	0.889	17.56	4213	1.924	0.815	24.390	6383	2.973	1.413	-1.684	0.975	2.443	0.525
350T300-33	0.0346	0.329	1.12	0.799	0.439	1.560	0.324	0.992									0.131	0.750	-2.178	1.241	2.857	0.419
350T300-43	0.0451	0.428	1.46	1.044	0.570	1.562	0.420	0.991									0.290	0.976	-2.172	1.238	2.853	0.420
350T300-54	0.0566	0.537	1.83	1.324	0.716	1.570	0.525	0.989	0.974	0.383	7.57	2392	0.912	0.353	10.570	3372	0.573	1.238	-2.165	1.234	2.851	0.424
350T300-68	0.0713	0.676	2.30	1.695	0.904	1.583	0.657	0.986	1.352	0.541	10.69	2994	1.265	0.495	14.830	4536	1.146	1.585	-2.155	1.228	2.850	0.428
350T300-97	0.1017	0.964	3.28	2.497	1.295	1.610	0.926	0.980	2.242	0.931	18.40	4213	2.110	0.848	25.400	6383	3.323	2.336	-2.135	1.216	2.848	0.438
350T400-68	0.0713	0.819	2.79	2.177	1.161	1.631	1.427	1.320	1.536	0.568	11.22	2994	1.427	0.518	15.520	4536	1.388	3.510	-3.085	1.717	3.731	0.316
362T400-97	0.1017	1.180	4.02	3.447	1.732	1.709	2.042	1.316	2.790	1.033	20.41	4213	2.599	0.936	28.020	6383	4.068	5.585	-3.041	1.697	3.729	0.335
362T125-33	0.0346	0.212	0.72	0.438	0.232	1.438	0.030	0.377	0.384	0.174	3.44	1024					0.085	0.076	-0.658	0.409	1.626	0.836
362T125-43	0.0451	0.276	0.94	0.571	0.302	1.439	0.039	0.375	0.531	0.245	4.84	1739					0.187	0.098	-0.654	0.407	1.625	0.838
362T125-54	0.0566	0.346	1.18	0.723	0.378	1.445	0.048	0.373	0.705	0.332	6.57	2480	0.678	0.312	9.340	3372	0.369	0.123	-0.648	0.404	1.627	0.841
362T125-68	0.0713	0.436	1.48	0.921	0.475	1.454	0.060	0.370	0.921	0.453	8.95	3104	0.907	0.427	12.780	4703	0.738	0.156	-0.641	0.399	1.631	0.846
362T125-97	0.1017	0.621	2.11	1.343	0.675	1.471	0.082	0.363	1.343	0.675	15.24	4370	1.343	0.675	20.200	6622	2.140	0.226	-0.626	0.390	1.639	0.854
362T150-33	0.0346	0.229	0.78	0.499	0.264	1.475	0.050	0.467	0.414	0.180	3.56	1024					0.091	0.124	-0.854	0.522	1.767	0.766
362T150-43	0.0451	0.298	1.02	0.650	0.343	1.476	0.064	0.465	0.574	0.255	5.04	1739					0.202	0.160	-0.850	0.519	1.766	0.768
362T150-54	0.0566	0.374	1.27	0.823	0.431	1.483	0.080	0.462	0.769	0.349	6.89	2480	0.735	0.325	9.740	3372	0.400	0.202	-0.844	0.516	1.768	0.772
362T150-68	0.0713	0.471	1.60	1.050	0.542	1.492	0.099	0.459	1.034	0.480	9.49	3104	0.993	0.449	13.430	4703	0.799	0.257	-0.836	0.511	1.771	0.777
362T150-97	0.1017	0.672	2.29	1.534	0.771	1.512	0.138	0.453	1.534	0.771	15.23	4370	1.534	0.733	21.940	6622	2.315	0.374	-0.820	0.501	1.778	0.787
362T200-33	0.0346	0.264	0.90	0.619	0.328	1.532	0.110	0.645	0.464	0.190	3.76	1024					0.105	0.269	-1.270	0.754	2.092	0.631
362T200-43	0.0451	0.343	1.17	0.808	0.427	1.534	0.142	0.643	0.649	0.270	5.34	1739					0.233	0.350	-1.265	0.752	2.090	0.633
362T200-54	0.0566	0.431	1.47	1.024	0.536	1.541	0.177	0.640	0.879	0.372	7.35	2480	0.832	0.345	10.340	3372	0.460	0.442	-1.259	0.748	2.091	0.637
362T200-68	0.0713	0.543	1.85	1.307	0.675	1.552	0.221	0.638	1.199	0.519	10.26	3104	1.138	0.480	14.370	4703	0.919	0.564	-1.250	0.743	2.093	0.643
362T200-97	0.1017	0.773	2.63	1.917	0.963	1.575	0.308	0.631	1.915	0.867	17.14	4370	1.839	0.803	24.060	6622	2.666	0.825	-1.232	0.732	2.097	0.655
362T250-43	0.0451	0.389	1.32	0.966	0.510	1.577	0.260	0.818	0.713	0.281	5.56	1739					0.263	0.641	-1.702	0.990	2.460	0.521
362T250-54	0.0566	0.487	1.66	1.224	0.641	1.585	0.324	0.816	0.971	0.389	7.69	2480	0.914	0.360	10.770	3372	0.521	0.812	-1.695	0.986	2.460	0.525
362T250-68	0.0713	0.614	2.09	1.565	0.808	1.597	0.406	0.813	1.337	0.546	10.79	3104	1.259	0.502	15.040	4703	1.040	1.038	-1.686	0.980	2.460	0.530
362T250-97	0.1017	0.875	2.98	2.300	1.155	1.621	0.570	0.807	2.180	0.928	18.34	4370	2.069	0.851	25.490	6622	3.016	1.524	-1.667	0.969	2.461	0.541
362T300-33	0.0346	0.333	1.13	0.861	0.457	1.608	0.327	0.992									0.133	0.811	-2.159	1.234	2.869	0.434
362T300-43	0.0451	0.434	1.48	1.124	0.594	1.610	0.425	0.990									0.294	1.055	-2.153	1.231	2.865	0.435
362T300-54	0.0566	0.544	1.85	1.425	0.746	1.618	0.531	0.988	1.051	0.402	7.94	2480	0.985	0.371	11.110	3372	0.581	1.337	-2.146	1.227	2.863	0.439
362T300-68	0.0713	0.685	2.33	1.823	0.941	1.631	0.665	0.985	1.456	0.566	11.19	3104	1.364	0.519	15.550	4703	1.161	1.711	-2.136	1.221	2.862	0.443
362T300-97	0.1017	0.977	3.32	2.682	1.348	1.657	0.937	0.979	2.409	0.972	19.21	4370	2.268	0.887	26.540	6622	3.367	2.518	-2.116	1.209	2.860	0.453
362T400-68	0.0713	0.828	2.82	2.339	1.207	1.681	1.444	1.321	1.654	0.595	11.75	3104	1.537	0.544	16.280	4703	1.403	3.785	-3.063	1.709	3.735	0.328
362T400-97	0.1017	1.180	4.02	3.447	1.732	1.709	2.042	1.316	2.790	1.033	20.41	4370	2.599	0.936	28.020	6622	4.068	5.585	-3.041	1.697	3.729	0.335
400T125-33	0.0346	0.225	0.76	0.549	0.265	1.563	0.031	0.371	0.484	0.201	3.97	940					0.090	0.095	-0.630	0.396	1.725	0.867
400T125-43	0.0451	0.293	1.00	0.716	0.344	1.563	0.040	0.369	0.666	0.282	5.57	1739					0.198	0.122	-0.626	0.394	1.724	0.868
400T125-54	0.0566	0.367	1.25	0.904	0.431	1.569	0.049	0.366	0.882	0.381	7.53	2739	0.849	0.359	10.740	3372	0.392	0.154	-0.621	0.390	1.727	0.871
400T125-68	0.0713	0.462	1.57	1.150	0.541	1.577	0.061	0.363	1.150	0.517	10.22	3435	1.134	0.488	14.620	5205	0.783	0.194	-0.614	0.386	1.731	0.874
400T125-97	0.1017	0.659	2.24	1.673	0.768	1.594	0.084	0.357	1.673	0.768	17.35	4842	1.673	0.768	23.000	7337	2.271	0.280	-0.600	0.377	1.740	0.881

SECTION PROPERTIES

Structural Track Section Properties

			Gross Properties						Effective Properties Fy = 33 ksi				Effective Properties Fy = 50 ksi				Torsional Properties					
Section	Thick-ness (in)	Area (in2)	Weight (lb/ft)	Ixx (in4)	Sxx (in3)	Rx (in)	Iyy (in4)	Ry (in)	Ixx (in4)	Sxx (in3)	MaFy (in-k)	Va (lb)	Ixx (in4)	Sxx (in3)	MaFy (in-k)	Va (lb)	J (in4)	Cw (in6)	Xo (in)	m (in)	Ro (in)	y
400T150-33	0.0346	0.242	0.82	0.622	0.300	1.603	0.051	0.460	0.519	0.208	4.12	940					0.097	0.155	-0.821	0.507	1.859	0.805
400T150-43	0.0451	0.315	1.07	0.811	0.390	1.604	0.066	0.458	0.719	0.293	5.80	1739					0.214	0.200	-0.817	0.504	1.857	0.807
400T150-54	0.0566	0.396	1.35	1.025	0.489	1.610	0.082	0.456	0.960	0.399	7.89	2739	0.918	0.374	11.190	3372	0.422	0.252	-0.811	0.501	1.860	0.810
400T150-68	0.0713	0.498	1.69	1.306	0.615	1.619	0.102	0.453	1.286	0.548	10.82	3435	1.237	0.513	15.350	5205	0.844	0.320	-0.804	0.496	1.864	0.814
400T150-97	0.1017	0.710	2.41	1.903	0.874	1.638	0.141	0.447	1.903	0.874	17.27	4842	1.903	0.832	24.920	7337	2.447	0.463	-0.788	0.487	1.872	0.823
400T200-33	0.0346	0.277	0.94	0.768	0.371	1.666	0.113	0.639	0.581	0.220	4.34	940					0.110	0.336	-1.229	0.737	2.166	0.678
400T200-43	0.0451	0.360	1.23	1.002	0.482	1.668	0.146	0.637	0.811	0.311	6.14	1739					0.244	0.436	-1.224	0.734	2.164	0.680
400T200-54	0.0566	0.452	1.54	1.268	0.604	1.675	0.182	0.635	1.093	0.426	8.42	2739	1.037	0.397	11.880	3372	0.483	0.551	-1.217	0.730	2.165	0.684
400T200-68	0.0713	0.569	1.94	1.617	0.761	1.685	0.227	0.632	1.485	0.591	11.68	3435	1.412	0.549	16.420	5205	0.965	0.702	-1.209	0.725	2.168	0.689
400T200-97	0.1017	0.811	2.76	2.363	1.085	1.707	0.317	0.625	2.360	0.981	19.38	4842	2.268	0.911	27.280	7337	2.797	1.022	-1.192	0.715	2.173	0.699
400T250-43	0.0451	0.405	1.38	1.193	0.573	1.715	0.268	0.813	0.888	0.324	6.40	1739					0.275	0.799	-1.653	0.970	2.517	0.569
400T250-54	0.0566	0.509	1.73	1.511	0.720	1.723	0.335	0.811	1.205	0.445	8.80	2739	1.137	0.413	12.380	3372	0.543	1.011	-1.646	0.966	2.517	0.572
400T250-68	0.0713	0.641	2.18	1.928	0.907	1.735	0.418	0.808	1.652	0.622	12.28	3435	1.559	0.574	17.190	5205	1.086	1.289	-1.637	0.961	2.518	0.578
400T250-97	0.1017	0.913	3.11	2.823	1.296	1.758	0.587	0.802	2.679	1.048	20.72	4842	2.546	0.965	28.890	7337	3.148	1.886	-1.618	0.950	2.521	0.588
400T300-33	0.0346	0.346	1.18	1.060	0.512	1.751	0.338	0.989									0.138	1.009	-2.103	1.213	2.910	0.478
400T300-43	0.0451	0.451	1.53	1.384	0.665	1.753	0.439	0.987									0.305	1.313	-2.097	1.210	2.906	0.479
400T300-54	0.0566	0.565	1.92	1.753	0.835	1.761	0.548	0.985	1.302	0.460	9.09	2739	1.224	0.426	12.770	3372	0.604	1.662	-2.090	1.206	2.905	0.482
400T300-68	0.0713	0.712	2.42	2.239	1.054	1.774	0.686	0.982	1.797	0.645	12.74	3435	1.687	0.594	17.780	5205	1.206	2.122	-2.081	1.200	2.905	0.487
400T300-97	0.1017	1.015	3.45	3.284	1.508	1.799	0.967	0.976	2.953	1.098	21.70	4842	2.786	1.005	30.090	7337	3.499	3.111	-2.061	1.189	2.905	0.496
400T400-68	0.0713	0.854	2.91	2.862	1.347	1.830	1.491	1.321	2.038	0.678	13.39	3435	1.900	0.622	18.630	5205	1.448	4.680	-2.998	1.686	3.752	0.362
400T400-97	0.1017	1.218	4.15	4.204	1.930	1.858	2.109	1.316	3.413	1.167	23.06	4842	3.186	1.062	31.790	7337	4.200	6.880	-2.977	1.674	3.747	0.369
550T300-43	0.0451	0.518	1.76	2.755	0.973	2.306	0.485	0.967									0.351	2.687	-1.904	1.133	3.143	0.633
550T300-54	0.0566	0.650	2.21	3.479	1.221	2.313	0.606	0.965	2.654	0.723	14.28	2739	2.526	0.663	19.840	2980	0.694	3.390	-1.898	1.129	3.144	0.636
550T300-68	0.0713	0.819	2.79	4.424	1.539	2.324	0.758	0.962	3.610	0.996	19.68	4347	3.417	0.929	27.800	5350	1.388	4.307	-1.889	1.123	3.146	0.639
550T300-97	0.1017	1.167	3.97	6.430	2.196	2.347	1.068	0.956	5.816	1.654	32.68	6730	5.516	1.531	45.830	10197	4.024	6.248	-1.871	1.113	3.150	0.647
550T400-68	0.0713	0.961	3.27	5.573	1.939	2.408	1.655	1.312	4.073	1.049	20.74	4347	3.834	0.976	29.210	5350	1.629	9.418	-2.766	1.600	3.895	0.496
550T400-97	0.1017	1.371	4.66	8.113	2.771	2.433	2.339	1.306	6.666	1.759	34.76	6730	6.265	1.619	48.490	10197	4.726	13.707	-2.746	1.589	3.895	0.503
600T125-33	0.0346	0.294	1.00	1.428	0.465	2.204	0.034	0.339	1.258	0.297	5.87	622					0.117	0.238	-0.516	0.337	2.289	0.949
600T125-43	0.0451	0.383	1.30	1.861	0.604	2.205	0.044	0.337	1.768	0.461	9.11	1377					0.260	0.307	-0.513	0.335	2.288	0.950
600T125-54	0.0566	0.480	1.63	2.344	0.756	2.209	0.054	0.335	2.299	0.666	13.15	2728	2.241	0.592	17.730	2728	0.513	0.384	-0.508	0.332	2.291	0.951
600T125-68	0.0713	0.605	2.06	2.969	0.950	2.215	0.067	0.332	2.969	0.916	18.09	4347	2.934	0.858	25.690	5350	1.025	0.483	-0.503	0.329	2.296	0.952
600T125-97	0.1017	0.862	2.93	4.281	1.347	2.228	0.092	0.326	4.281	1.347	30.43*	7359	4.281	1.347	40.330	10885	2.973	0.685	-0.491	0.321	2.305	0.955
600T125-118	0.1242	1.052	3.58	5.268	1.637	2.237	0.109	0.321	5.268	1.637	37.94	8936	5.268	1.637	56.320	13539	5.411	0.832	-0.483	0.315	2.311	0.956
600T150-33	0.0346	0.311	1.06	1.590	0.517	2.260	0.057	0.426	1.334	0.303	5.99	622					0.124	0.390	-0.684	0.439	2.399	0.919
600T150-43	0.0451	0.405	1.38	2.072	0.673	2.261	0.073	0.424	1.890	0.474	9.36	1377					0.275	0.504	-0.680	0.437	2.398	0.920
600T150-54	0.0566	0.509	1.73	2.611	0.843	2.266	0.091	0.422	2.473	0.689	13.62	2728	2.400	0.609	18.240	2728	0.543	0.632	-0.675	0.434	2.401	0.921
600T150-68	0.0713	0.641	2.18	3.309	1.059	2.273	0.113	0.419	3.262	0.963	19.03	4347	3.162	0.891	26.680	5350	1.086	0.797	-0.669	0.430	2.406	0.923
600T150-97	0.1017	0.913	3.11	4.778	1.504	2.288	0.156	0.413	4.778	1.504	29.71	7359	4.778	1.444	43.230	10885	3.148	1.138	-0.656	0.421	2.415	0.926
600T150-118	0.1242	1.114	3.79	5.886	1.829	2.298	0.186	0.409	5.886	1.829	41.41	8936	5.886	1.829	61.640	13539	5.730	1.389	-0.647	0.415	2.422	0.929
600T200-33	0.0346	0.346	1.18	1.913	0.622	2.352	0.126	0.604	1.542	0.333	6.59	622					0.138	0.847	-1.048	0.655	2.645	0.843
600T200-43	0.0451	0.451	1.53	2.494	0.809	2.353	0.163	0.602	2.076	0.565	11.16	1377					0.305	1.098	-1.044	0.652	2.643	0.844
600T200-54	0.0566	0.565	1.92	3.145	1.015	2.359	0.203	0.600	2.759	0.759	15.00	2728	2.641	0.717	21.480	2728	0.604	1.381	-1.038	0.649	2.646	0.846
600T200-68	0.0713	0.712	2.42	3.990	1.277	2.367	0.254	0.597	3.696	1.034	20.42	4347	3.540	0.973	29.120	5350	1.206	1.746	-1.031	0.644	2.650	0.849
600T200-97	0.1017	1.015	3.45	5.773	1.816	2.385	0.354	0.591	5.758	1.667	32.95	7359	5.558	1.568	46.940	10885	3.499	2.510	-1.016	0.635	2.659	0.854
600T200-118	0.1242	1.239	4.21	7.122	2.214	2.398	0.426	0.586	7.122	2.170	42.88	8936	7.122	2.051	61.420	13539	6.369	3.083	-1.006	0.628	2.665	0.858
600T250-43	0.0451	0.496	1.69	2.916	0.946	2.425	0.303	0.781	2.269	0.563	11.13	1377					0.336	2.004	-1.436	0.878	2.925	0.759
600T250-54	0.0566	0.622	2.12	3.678	1.187	2.432	0.377	0.779	3.014	0.793	15.68	2728	2.881	0.732	21.920	2728	0.664	2.523	-1.430	0.874	2.927	0.761
600T250-68	0.0713	0.783	2.67	4.670	1.495	2.442	0.472	0.776	4.065	1.085	21.45	4347	3.871	1.017	30.460	5350	1.327	3.198	-1.422	0.869	2.930	0.764
600T250-97	0.1017	1.116	3.80	6.767	2.129	2.462	0.662	0.770	6.441	1.775	35.08	7359	6.157	1.656	49.580	10885	3.849	4.616	-1.406	0.859	2.938	0.771
600T250-118	0.1242	1.363	4.64	8.359	2.598	2.477	0.798	0.765	8.306	2.343	46.30	8936	7.990	2.188	65.510	13539	7.008	5.686	-1.394	0.852	2.943	0.776
600T300-33	0.0346	0.415	1.41	2.559	0.833	2.483	0.384	0.962									0.166	2.520	-1.853	1.112	3.244	0.674
600T300-43	0.0451	0.541	1.84	3.337	1.083	2.484	0.498	0.960									0.367	3.275	-1.848	1.109	3.242	0.675
600T300-54	0.0566	0.679	2.31	4.212	1.359	2.492	0.622	0.957	3.239	0.821	16.22	2728	3.108	0.722	21.610	2728	0.725	4.129	-1.842	1.105	3.243	0.677
600T300-68	0.0713	0.854	2.91	5.350	1.712	2.502	0.778	0.954	4.389	1.126	22.25	4347	4.164	1.053	31.530	5350	1.448	5.239	-1.834	1.100	3.246	0.681
600T300-97	0.1017	1.218	4.15	7.762	2.442	2.524	1.096	0.948	7.034	1.857	36.69	7359	6.681	1.724	51.620	10885	4.200	7.582	-1.816	1.089	3.251	0.688
600T300-118	0.1242	1.487	5.06	9.595	2.982	2.540	1.325	0.944	9.157	2.471	48.82	8936	8.734	2.291	68.590	13539	7.646	9.359	-1.803	1.082	3.255	0.693
600T400-68	0.0713	0.997	3.39	6.711	2.148	2.594	1.702	1.306	4.943	1.187	23.45	4347	4.665	1.107	33.150	5350	1.690	11.435	-2.697	1.573	3.964	0.537
600T400-97	0.1017	1.422	4.84	9.751	3.068	2.619	2.405	1.301	8.042	1.975	39.03	7359	7.574	1.824	54.620	10885	4.901	16.604	-2.678	1.562	3.965	0.544
600T400-118	0.1242	1.735	5.91	12.068	3.751	2.637	2.916	1.296	10.593	2.651	52.39	8936	9.994	2.439	73.030	13539	8.924	20.542	-2.664	1.554	3.966	0.549
725T125-27[1]	0.0283	0.276	0.94	1.855	0.502	2.593	0.029	0.323	1.471	0.258	5.09	281					0.074	0.301	-0.467	0.310	2.654	0.969
725T125-30[1]	0.0312	0.304	1.03	2.045	0.553	2.593	0.032	0.323	1.688	0.306	6.04	377					0.099	0.330	-0.466	0.310	2.654	0.969
725T125-33[1]	0.0346	0.337	1.15	2.268	0.613	2.593	0.035	0.322	1.946	0.365	7.22	514					0.135	0.365	-0.465	0.309	2.654	0.969
725T125-43	0.0451	0.439	1.49	2.955	0.797	2.593	0.045	0.320	2.763	0.573	11.32	1137					0.298	0.471	-0.462	0.307	2.654	0.970
725T125-54	0.0566	0.551	1.88	3.718	0.998	2.597	0.056	0.318	3.666	0.837	16.54	2252	3.510	0.737	22.060	2252	0.589	0.589	-0.458	0.304	2.656	0.970
725T125-68	0.0713	0.694	2.36	4.702	1.254	2.603	0.069	0.315	4.702	1.198	23.68	4347	4.667	1.081	32.370	4516	1.176	0.738	-0.452	0.301	2.661	0.971
725T125-97	0.1017	0.989	3.37	6.761	1.778	2.614	0.095	0.310	6.761	1.778	40.15	8843	6.761	1.778	53.230	10885	3.411	1.042	-0.442	0.293	2.669	0.973
725T125-118	0.1242	1.208	4.11	8.303	2.161	2.622	0.113	0.305	8.303	2.161	50.08	10857	8.303	2.161	74.330	16235	6.209	1.262	-0.434	0.288	2.675	0.974
725T150-27[1]	0.0283	0.290	0.99	2.047	0.554	2.656	0.048	0.409	1.546	0.262	5.17	281					0.077	0.493	-0.623	0.407	2.759	0.949
725T150-30[1]	0.0312	0.320	1.09	2.256	0.611	2.656	0.053	0.408	1.776	0.311	6.14	377					0.104	0.543	-0.622	0.406	2.759	0.949
725T150-33[1]	0.0346	0.355	1.21	2.502	0.677	2.657	0.059	0.407	2.053	0.372	7.36	514					0.141	0.601	-0.620	0.406	2.758	0.949
725T150-43	0.0451	0.462	1.57	3.260	0.880	2.657	0.076	0.406	2.934	0.587	11.60	1137					0.313	0.777	-0.617	0.403	2.758	0.950
725T150-54	0.0566	0.579	1.97	4.104	1.102	2.661	0.094	0.403	3.923	0.864	17.07	2252	3.732	0.756	22.630	2252	0.619	0.972	-0.612	0.401	2.761	0.951
725T150-68	0.0713	0.730	2.48	5.194	1.385	2.668	0.117	0.401	5.129	1.251	24.71	4347	5.002	1.118	33.480	4516	1.237	1.222	-0.607	0.397	2.765	0.952
725T150-97	0.1017	1.040	3.54	7.477	1.966	2.681	0.162	0.395	7.477	1.966	38.85	8843	7.477	1.895	56.750	10885	3.586	1.735	-0.595	0.389	2.774	0.954
725T150-118	0.1242	1.270	4.32	9.190	2.392	2.690	0.193	0.390	9.190	2.392	54.14	10857	9.190	2.392	80.590	16235	6.529	2.112	-0.586	0.383	2.781	0.956
725T200-33[1]	0.0346	0.389	1.32	2.971	0.803	2.763	0.132	0.583	2.465	0.400	7.91	514					0.155	1.307	-0.962	0.612	2.983	0.896
725T200-43	0.0451	0.507	1.73	3.872	1.045	2.764	0.171	0.581	3.307	0.678	13.39	1137					0.344	1.695	-0.958	0.610	2.982	0.897
725T200-54	0.0566	0.636	2.16	4.877	1.310	2.769	0.213	0.579	4.319	1.007	19.90	2252	4.188	0.881	26.370	2252	0.679	2.127	-0.953	0.607	2.985	0.898
725T200-68	0.0713	0.801	2.73	6.178	1.647	2.777	0.266	0.576	5.749	1.359	26.86	4347	5.526	1.287	38.540	4516	1.357	2.684	-0.946	0.602	2.990	0.900
725T200-97	0.1017	1.142	3.89	8.908	2.342	2.793	0.371	0.570	8.881	2.166	42.80	8843	8.593	2.048	61.330	10885	3.937	3.839	-0.933	0.594	2.999	0.903
725T200-118	0.1242	1.394	4.74	10.965	2.854	2.805	0.445	0.565	10.965	2.802	55.37	10857	10.965	2.662	79.690	16235	7.167	4.698	-0.923	0.587	3.006	0.906
725T250-43	0.0451	0.552	1.88	4.484	1.210	2.850	0.318	0.759	3.602	0.673	13.30	1137					0.374	3.092	-1.330	0.828	3.235	0.831
725T250-54	0.0566	0.693	2.36	5.650	1.517	2.856	0.397	0.757	4.693	1.052	20.78	2252	4.564	0.874	26.160	2252	0.740	3.887	-1.324	0.825	3.238	0.833
725T250-68	0.0713	0.872	2.97	7.161	1.910	2.865	0.496	0.754	6.285	1.426	28.17	4347	6.011	1.345	40.280	4516	1.478	4.914	-1.317	0.820	3.242	0.835
725T250-97	0.1017	1.244	4.23	10.340	2.719	2.884	0.696	0.748	9.863	2.300	45.45	8843	9.457	2.159	64.650	10885	4.287	7.061	-1.302	0.811	3.251	0.840
725T250-118	0.1242	1.518	5.17	12.740	3.316	2.897	0.839	0.744	12.655	3.014	59.56	10857	12.200	2.831	84.760	16235	7.806	8.667	-1.291	0.804	3.257	0.843
725T300-54	0.0566	0.749	2.55	6.424	1.725	2.928	0.657	0.936	5.034	1.075	21.25	2252	4.905	0.868	25.990	2252	0.800	6.354	-1.718	1.050	3.521	0.762

SECTION PROPERTIES

Structural Track Section Properties

			Gross Properties						Effective Properties Fy = 33 ksi				Effective Properties Fy = 50 ksi				Torsional Properties					
Section	Thick-ness (in)	Area (in2)	Weight (lb/ft)	Ixx (in4)	Sxx (in3)	Rx (in)	Iyy (in4)	Ry (in)	Ixx (in4)	Sxx (in3)	MaFy (in-k)	Va (lb)	Ixx (in4)	Sxx (in3)	MaFy (in-k)	Va (lb)	J (in4)	Cw (in6)	Xo (in)	m (in)	Ro (in)	y
725T300-68	0.0713	0.944	3.21	8.145	2.172	2.938	0.822	0.933	6.761	1.478	29.21	4347	6.444	1.392	41.680	4516	1.599	8.044	-1.710	1.046	3.525	0.765
725T300-97	0.1017	1.345	4.58	11.772	3.095	2.958	1.157	0.927	10.717	2.403	47.49	8843	10.216	2.246	67.260	10885	4.638	11.589	-1.693	1.035	3.532	0.770
725T300-118	0.1242	1.642	5.59	14.515	3.778	2.973	1.398	0.923	13.873	3.173	62.70	10857	13.268	2.960	88.640	16235	8.445	14.256	-1.681	1.028	3.538	0.774
725T400-68	0.0713	1.086	3.70	10.112	2.697	3.051	1.805	1.289	7.582	1.559	30.81	4347	7.256	1.379	41.290	4516	1.841	17.505	-2.542	1.510	4.175	0.629
725T400-97	0.1017	1.549	5.27	14.635	3.848	3.074	2.550	1.283	12.177	2.556	50.51	8843	11.522	2.378	71.190	10885	5.339	25.302	-2.524	1.500	4.180	0.635
725T400-118	0.1242	1.891	6.43	18.064	4.701	3.091	3.092	1.279	15.935	3.402	67.22	10857	15.091	3.151	94.350	16235	9.722	31.200	-2.511	1.492	4.183	0.640
800T125-118	0.1242	1.301	4.43	10.569	2.506	2.850	0.114	0.297	10.569	2.506	58.08	12009	10.569	2.506	86.210	16235	6.688	1.567	-0.410	0.274	2.895	0.980
800T150-33[1]	0.0346	0.380	1.29	3.180	0.781	2.891	0.060	0.397	2.569	0.414	8.18	465					0.152	0.751	-0.588	0.388	2.977	0.961
800T150-43	0.0451	0.496	1.69	4.144	1.015	2.891	0.077	0.395	3.689	0.655	12.95	1030					0.336	0.972	-0.584	0.386	2.976	0.961
800T150-54	0.0566	0.622	2.12	5.214	1.272	2.896	0.096	0.393	4.976	0.969	19.15	2039	4.692	0.844	25.270	2039	0.664	1.215	-0.580	0.383	2.979	0.962
800T150-68	0.0713	0.783	2.67	6.594	1.599	2.902	0.119	0.390	6.527	1.412	27.91	4087	6.361	1.255	37.580	4087	1.327	1.526	-0.575	0.379	2.984	0.963
800T150-97	0.1017	1.116	3.80	9.479	2.269	2.914	0.165	0.384	9.479	2.269	44.83	8843	9.479	2.192	65.620	10885	3.849	2.162	-0.564	0.372	2.993	0.965
800T150-118	0.1242	1.363	4.64	11.641	2.760	2.923	0.197	0.380	11.641	2.760	62.48	12009	11.641	2.760	93.000	16235	7.008	2.627	-0.555	0.366	2.999	0.966
800T200-33[1]	0.0346	0.415	1.41	3.749	0.921	3.005	0.135	0.571	2.788	0.424	8.37	465					0.166	1.638	-0.917	0.589	3.194	0.918
800T200-43	0.0451	0.541	1.84	4.887	1.197	3.006	0.175	0.569	4.043	0.676	13.35	1030					0.367	2.124	-0.913	0.587	3.193	0.918
800T200-54	0.0566	0.679	2.31	6.152	1.501	3.011	0.218	0.567	5.505	1.009	19.93	2039	5.149	0.871	26.090	2039	0.725	2.664	-0.908	0.584	3.196	0.919
800T200-68	0.0713	0.854	2.91	7.786	1.888	3.019	0.272	0.564	7.306	1.490	29.45	4087	7.051	1.310	39.220	4087	1.448	3.357	-0.902	0.580	3.201	0.921
800T200-97	0.1017	1.218	4.15	11.212	2.683	3.034	0.379	0.558	11.176	2.491	49.22	8843	10.833	2.347	70.270	10885	4.200	4.792	-0.889	0.571	3.210	0.923
800T200-118	0.1242	1.487	5.06	13.785	3.269	3.045	0.455	0.553	13.785	3.212	63.48	12009	13.785	3.059	91.590	16235	7.646	5.854	-0.879	0.565	3.217	0.925
800T250-43	0.0451	0.586	1.99	5.629	1.380	3.100	0.326	0.746	4.593	0.739	14.60	1030					0.397	3.877	-1.274	0.801	3.433	0.862
800T250-54	0.0566	0.735	2.50	7.090	1.730	3.106	0.407	0.744	5.948	1.193	23.57	2039	5.816	0.959	28.710	2039	0.785	4.870	-1.268	0.798	3.436	0.864
800T250-68	0.0713	0.926	3.15	8.978	2.177	3.114	0.509	0.741	7.917	1.648	32.57	4087	7.588	1.560	46.720	4087	1.569	6.151	-1.261	0.793	3.441	0.866
800T250-97	0.1017	1.320	4.49	12.944	3.098	3.132	0.713	0.735	12.361	2.641	52.19	8843	11.872	2.487	74.470	10885	4.550	8.818	-1.247	0.784	3.450	0.869
800T250-118	0.1242	1.611	5.48	15.930	3.777	3.144	0.860	0.731	15.822	3.448	68.14	12009	15.272	3.248	97.260	16235	8.285	10.807	-1.236	0.777	3.457	0.872
800T300-33[1]	0.0346	0.484	1.65	4.887	1.200	3.177	0.416	0.927									0.193	4.872	-1.662	1.026	3.703	0.799
800T300-43	0.0451	0.631	2.15	6.372	1.562	3.178	0.540	0.925									0.428	6.330	-1.657	1.024	3.702	0.800
800T300-54	0.0566	0.792	2.69	8.028	1.958	3.184	0.675	0.923	6.396	1.178	23.28	2039	6.237	0.956	28.620	2039	0.845	7.960	-1.652	1.020	3.704	0.801
800T300-68	0.0713	0.997	3.39	10.171	2.466	3.194	0.844	0.920	8.497	1.709	33.76	4087	8.160	1.548	46.360	4087	1.690	10.067	-1.644	1.015	3.708	0.803
800T300-97	0.1017	1.422	4.84	14.676	3.513	3.213	1.188	0.914	13.395	2.757	54.49	8843	12.794	2.586	77.430	10885	4.901	14.472	-1.628	1.006	3.716	0.808
800T300-118	0.1242	1.735	5.91	18.074	4.286	3.227	1.436	0.910	17.291	3.626	71.65	12009	16.563	3.394	101.630	16235	8.924	17.775	-1.617	0.998	3.722	0.811
800T400-68	0.0713	1.140	3.88	12.555	3.044	3.319	1.859	1.277	9.505	1.802	35.62	4087	9.180	1.520	45.510	4087	1.931	21.882	-2.458	1.475	4.323	0.677
800T400-97	0.1017	1.625	5.53	18.141	4.342	3.341	2.626	1.271	15.169	2.932	57.93	8843	14.387	2.737	81.950	10885	5.602	31.564	-2.441	1.464	4.329	0.682
800T400-118	0.1242	1.984	6.75	22.363	5.303	3.357	3.184	1.267	19.784	3.885	76.76	12009	18.774	3.612	108.140	16235	10.201	38.863	-2.428	1.457	4.333	0.686
925T125-43[1]	0.0451	0.530	1.80	5.436	1.155	3.204	0.047	0.297	4.902	0.752	14.86	890					0.359	0.817	-0.399	0.270	3.243	0.985
925T125-54	0.0566	0.664	2.26	6.834	1.447	3.207	0.058	0.296	6.607	1.112	21.98	1761	6.228	0.968	28.990	1761	0.709	1.018	-0.395	0.268	3.245	0.985
925T125-68	0.0713	0.837	2.85	8.632	1.817	3.212	0.072	0.293	8.632	1.621	32.04	3528	8.429	1.440	43.110	3528	1.418	1.273	-0.391	0.265	3.249	0.986
925T125-97	0.1017	1.193	4.06	12.377	2.577	3.221	0.099	0.288	12.377	2.577	58.21	8843	12.377	2.495	74.710	10291	4.112	1.787	-0.381	0.258	3.257	0.986
925T125-118	0.1242	1.456	4.95	15.171	3.133	3.228	0.117	0.283	15.171	3.133	72.61	13189	15.171	3.133	107.780	16235	7.487	2.156	-0.375	0.254	3.262	0.987
925T150-43[1]	0.0451	0.552	1.88	5.931	1.260	3.278	0.079	0.379	5.170	0.769	15.19	890					0.374	1.351	-0.538	0.359	3.343	0.974
925T150-54	0.0566	0.693	2.36	7.458	1.579	3.281	0.099	0.377	7.013	1.144	22.61	1761	6.575	0.991	29.660	1761	0.740	1.688	-0.534	0.357	3.346	0.975
925T150-68	0.0713	0.872	2.97	9.424	1.984	3.287	0.122	0.374	9.362	1.683	33.26	3528	8.962	1.484	44.420	3528	1.478	2.117	-0.529	0.353	3.350	0.975
925T150-97	0.1017	1.244	4.23	13.526	2.816	3.298	0.169	0.369	13.526	2.816	55.65	8843	13.526	2.636	78.910	10291	4.287	2.990	-0.518	0.346	3.359	0.976
925T150-118	0.1242	1.518	5.17	16.590	3.426	3.306	0.202	0.365	16.590	3.426	77.55	13189	16.590	3.426	115.440	16235	7.806	3.624	-0.511	0.341	3.365	0.977
925T200-43[1]	0.0451	0.597	2.03	6.920	1.471	3.404	0.180	0.550	5.628	0.791	15.64	890					0.405	2.962	-0.848	0.553	3.551	0.943
925T200-54	0.0566	0.749	2.55	8.706	1.843	3.409	0.225	0.547	7.706	1.188	23.47	1761	7.168	1.021	30.570	1761	0.800	3.711	-0.843	0.550	3.554	0.944
925T200-68	0.0713	0.944	3.21	11.009	2.318	3.416	0.280	0.545	10.412	1.769	34.95	3528	9.868	1.544	46.220	3528	1.599	4.671	-0.837	0.546	3.559	0.945
925T200-97	0.1017	1.345	4.58	15.822	3.294	3.429	0.391	0.539	15.769	3.075	60.76	8843	15.362	2.805	83.990	10291	4.638	6.647	-0.825	0.538	3.568	0.947
925T200-118	0.1242	1.642	5.59	19.428	4.012	3.439	0.469	0.534	19.428	3.948	78.01	13189	19.423	3.773	112.980	16235	8.445	8.102	-0.816	0.532	3.575	0.948
925T250-43[1]	0.0451	0.642	2.19	7.909	1.681	3.509	0.338	0.725	6.597	0.849	16.79	890					0.435	5.414	-1.191	0.760	3.776	0.901
925T250-54	0.0566	0.806	2.74	9.954	2.107	3.515	0.421	0.723	8.526	1.356	26.79	1761	8.343	1.101	32.970	1761	0.861	6.795	-1.186	0.757	3.779	0.902
925T250-68	0.0713	1.015	3.45	12.593	2.651	3.523	0.526	0.720	11.182	2.049	40.50	3528	10.855	1.781	53.330	3528	1.720	8.569	-1.179	0.752	3.784	0.903
925T250-97	0.1017	1.447	4.92	18.119	3.772	3.539	0.738	0.714	17.337	3.252	64.26	8843	16.692	3.077	92.130	10291	4.989	12.249	-1.166	0.744	3.794	0.906
925T250-118	0.1242	1.767	6.01	22.266	4.598	3.550	0.890	0.710	22.112	4.224	83.47	13189	21.385	3.997	119.660	16235	9.083	14.980	-1.156	0.737	3.801	0.908
925T300-54	0.0566	0.862	2.93	11.202	2.371	3.604	0.700	0.901	9.136	1.349	26.66	1761	8.919	1.102	33.010	1761	0.921	11.108	-1.553	0.973	4.026	0.851
925T300-68	0.0713	1.086	3.70	14.178	2.985	3.613	0.877	0.898	11.961	2.123	41.96	3528	11.637	1.771	53.010	3528	1.841	14.029	-1.546	0.969	4.031	0.853
925T300-97	0.1017	1.549	5.27	20.416	4.251	3.631	1.233	0.892	18.708	3.391	67.01	8843	17.920	3.197	95.710	10291	5.339	20.111	-1.531	0.959	4.040	0.856
925T300-118	0.1242	1.891	6.43	25.104	5.184	3.644	1.490	0.888	24.053	4.434	87.62	13189	23.094	4.170	124.860	16235	9.722	24.648	-1.520	0.952	4.047	0.859
925T400-68	0.0713	1.229	4.18	17.347	3.652	3.757	1.939	1.256	13.385	2.165	42.78	3528	13.032	1.754	52.510	3528	2.082	30.465	-2.332	1.420	4.597	0.743
925T400-97	0.1017	1.752	5.96	25.009	5.207	3.778	2.739	1.250	21.076	3.603	71.19	8843	20.059	3.382	101.250	10291	6.041	43.823	-2.315	1.409	4.604	0.747
925T400-118	0.1242	2.139	7.28	30.781	6.357	3.793	3.320	1.246	27.357	4.744	93.75	13189	26.039	4.434	132.750	16235	10.999	53.847	-2.303	1.402	4.609	0.750
1000T125-33[1]	0.0346	0.432	1.47	5.089	1.003	3.431	0.037	0.292									0.173	0.754	-0.382	0.260	3.464	0.988
1000T125-43[1]	0.0451	0.563	1.92	6.630	1.305	3.431	0.047	0.290	5.886	0.819	16.19	822					0.382	0.973	-0.379	0.259	3.464	0.988
1000T125-54	0.0566	0.707	2.41	8.333	1.634	3.434	0.059	0.288	7.960	1.216	24.03	1628	7.479	1.055	31.590	1628	0.755	1.212	-0.376	0.256	3.466	0.988
1000T125-68	0.0713	0.890	3.03	10.522	2.053	3.438	0.073	0.286	10.452	1.781	35.19	3261	10.155	1.575	47.150	3261	1.508	1.515	-0.372	0.253	3.470	0.989
1000T125-97	0.1017	1.269	4.32	15.077	2.912	3.447	0.100	0.280	15.077	2.907	57.44	8843	15.077	2.753	82.420	9507	4.375	2.123	-0.363	0.247	3.477	0.989
1000T125-118	0.1242	1.549	5.27	18.471	3.540	3.453	0.118	0.276	18.471	3.540	82.05	13189	18.471	3.535	105.850	16235	7.966	2.558	-0.357	0.243	3.482	0.990
1000T150-33[1]	0.0346	0.450	1.53	5.531	1.090	3.507	0.062	0.372									0.179	1.247	-0.516	0.347	3.565	0.979
1000T150-43[1]	0.0451	0.586	1.99	7.207	1.419	3.507	0.080	0.370	6.195	0.837	16.54	822					0.397	1.612	-0.513	0.345	3.564	0.979
1000T150-54	0.0566	0.735	2.50	9.061	1.777	3.511	0.100	0.368	8.430	1.249	24.69	1628	7.880	1.079	32.290	1628	0.785	2.013	-0.509	0.342	3.567	0.980
1000T150-68	0.0713	0.926	3.15	11.445	2.233	3.516	0.124	0.366	11.342	1.846	36.48	3261	10.774	1.621	48.530	3261	1.569	2.522	-0.505	0.339	3.571	0.980
1000T150-97	0.1017	1.320	4.49	16.413	3.170	3.526	0.171	0.360	16.413	3.165	62.54	8843	16.413	2.902	86.900	9507	4.550	3.557	-0.495	0.332	3.579	0.981
1000T150-118	0.1242	1.611	5.48	20.121	3.857	3.534	0.204	0.356	20.121	3.857	87.30	13189	20.121	3.852	115.320	16235	8.285	4.307	-0.488	0.328	3.585	0.982
1000T200-33[1]	0.0346	0.484	1.65	6.416	1.265	3.640	0.142	0.541									0.193	2.732	-0.817	0.536	3.769	0.953
1000T200-43[1]	0.0451	0.631	2.15	8.361	1.646	3.640	0.183	0.539	6.722	0.861	17.01	822					0.428	3.540	-0.813	0.534	3.769	0.953
1000T200-54	0.0566	0.792	2.69	10.516	2.062	3.645	0.228	0.537	9.231	1.295	25.60	1628	8.560	1.111	33.260	1628	0.845	4.434	-0.809	0.531	3.772	0.954
1000T200-68	0.0713	0.997	3.39	13.292	2.594	3.651	0.284	0.534	12.551	1.936	38.26	3261	11.820	1.684	50.420	3261	1.690	5.576	-0.803	0.527	3.776	0.955
1000T200-97	0.1017	1.422	4.84	19.087	3.686	3.664	0.397	0.528	19.031	3.427	67.72	8843	18.583	3.081	92.250	9507	4.901	7.924	-0.791	0.519	3.786	0.956
1000T200-118	0.1242	1.735	5.91	23.422	4.489	3.674	0.476	0.524	23.422	4.420	87.35	13189	23.422	4.208	125.990	16235	8.924	9.649	-0.783	0.514	3.793	0.957
1000T250-43[1]	0.0451	0.676	2.30	9.515	1.873	3.751	0.344	0.713	7.172	0.876	17.32	822					0.458	6.477	-1.147	0.737	3.987	0.917
1000T250-54	0.0566	0.848	2.89	11.972	2.348	3.757	0.429	0.711	9.913	1.326	26.20	1628	9.141	1.132	33.890	1628	0.906	8.125	-1.142	0.734	3.990	0.918
1000T250-68	0.0713	1.068	3.64	15.138	2.954	3.764	0.536	0.708	13.578	1.997	39.46	3261	12.708	1.726	51.680	3261	1.810	10.240	-1.135	0.730	3.995	0.919
1000T250-97	0.1017	1.523	5.18	21.760	4.202	3.780	0.751	0.702	20.871	3.596	71.05	8843	20.254	3.201	95.840	9507	5.252	14.617	-1.122	0.721	4.005	0.921
1000T250-118	0.1242	1.860	6.33	26.723	5.122	3.791	0.905	0.698	26.538	4.721	93.29	13189	25.721	4.422	132.380	16235	9.562	17.858	-1.112	0.715	4.012	0.923
1000T300-33[1]	0.0346	0.553	1.88	8.184	1.613	3.845	0.441	0.892									0.221	8.147	-1.509	0.953	4.226	0.872
1000T300-43[1]	0.0451	0.721	2.45	10.669	2.100	3.846	0.572	0.891									0.489	10.582	-1.505	0.950	4.225	0.873
1000T300-54	0.0566	0.905	3.08	13.427	2.633	3.852	0.714	0.888	11.083	1.452	28.69	1628	10.826	1.191	35.650	1628	0.966	13.289	-1.500	0.947	4.228	0.874
1000T300-68	0.0713	1.140	3.88	16.985	3.314	3.860	0.893	0.885	14.416	2.377	46.96	3261	14.106	1.904	57.010	3261	1.931	16.771	-1.493	0.943	4.233	0.876

SECTION PROPERTIES

Structural Track Section Properties

			Gross Properties						Effective Properties Fy = 33 ksi				Effective Properties Fy = 50 ksi				Torsional Properties					
Section	Thick-ness (in)	Area (in2)	Weight (lb/ft)	Ixx (in4)	Sxx (in3)	Rx (in)	Iyy (in4)	Ry (in)	Ixx (in4)	Sxx (in3)	MaFy (in-k)	Va (lb)	Ixx (in4)	Sxx (in3)	MaFy (in-k)	Va (lb)	J (in4)	Cw (in6)	Xo (in)	m (in)	Ro (in)	y
1000T300-97	0.1017	1.625	5.53	24.434	4.719	3.878	1.257	0.879	22.441	3.798	75.04	8843	21.530	3.589	107.450	9507	5.602	24.009	-1.478	0.934	4.242	0.879
1000T300-118	0.1242	1.984	6.75	30.024	5.755	3.890	1.519	0.875	28.792	4.950	97.82	13189	27.680	4.668	139.760	16235	10.201	29.395	-1.468	0.927	4.249	0.881
1000T400-68	0.0713	1.282	4.36	20.678	4.035	4.016	1.982	1.243	16.172	2.330	46.04	3261	15.757	1.894	56.720	3261	2.173	36.414	-2.262	1.388	4.774	0.775
1000T400-97	0.1017	1.828	6.22	29.781	5.751	4.036	2.799	1.237	25.207	4.032	79.68	8843	24.036	3.795	113.630	9507	6.304	52.310	-2.246	1.378	4.782	0.779
1000T400-118	0.1242	2.232	7.60	36.626	7.020	4.051	3.392	1.233	32.638	5.292	104.58	13189	31.116	4.960	148.500	16235	11.478	64.212	-2.234	1.371	4.787	0.782
1200T125-97	0.1017	1.472	5.01	24.078	3.897	4.044	0.102	0.263	24.078	3.690	72.92	7902	23.751	3.442	103.060	7902	5.076	3.171	-0.322	0.222	4.065	0.994
1200T125-118	0.1242	1.798	6.12	29.472	4.74	4.049	0.121	0.259	29.472	4.74	93.67	13189	29.472	4.49	134.44	14434	9.243	3.812	-0.316	0.218	4.07	0.994
1200T150-33[1]	0.0346	0.519	1.77	8.782	1.446	4.114	0.064	0.351									0.207	1.881	-0.461	0.314	4.155	0.988
1200T150-43[1]	0.0451	0.676	2.30	11.442	1.882	4.114	0.083	0.350									0.458	2.431	-0.458	0.312	4.154	0.988
1200T150-54[1]	0.0566	0.848	2.89	14.378	2.357	4.117	0.103	0.348	12.962	1.530	30.23	1354	12.020	1.313	39.310	1354	0.906	3.033	-0.454	0.310	4.156	0.988
1200T150-68	0.0713	1.068	3.64	18.148	2.963	4.121	0.127	0.345	17.568	2.281	45.08	2713	16.566	1.987	59.480	2713	1.810	3.795	-0.450	0.307	4.160	0.988
1200T150-97	0.1017	1.523	5.18	25.987	4.206	4.130	0.176	0.340	25.987	3.996	78.97	7902	25.719	3.616	108.270	7902	5.252	5.335	-0.441	0.301	4.168	0.989
1200T150-118	0.1242	1.86	6.33	31.825	5.119	4.137	0.21	0.336	31.825	5.119	101.15	13189	31.825	4.865	145.66	14434	9.562	6.444	-0.435	0.296	4.173	0.989
1200T200-33[1]	0.0346	0.553	1.88	10.051	1.655	4.261	0.146	0.514									0.221	4.143	-0.737	0.491	4.355	0.971
1200T200-43[1]	0.0451	0.721	2.45	13.097	2.154	4.262	0.189	0.512									0.489	5.366	-0.734	0.489	4.355	0.972
1200T200-54[1]	0.0566	0.905	3.08	16.464	2.699	4.265	0.236	0.510	14.078	1.582	31.26	1354	12.962	1.350	40.410	1354	0.966	6.714	-0.730	0.487	4.357	0.972
1200T200-68	0.0713	1.140	3.88	20.791	3.395	4.271	0.294	0.508	19.277	2.383	47.09	2713	18.026	2.058	61.620	2713	1.931	8.431	-0.725	0.483	4.362	0.972
1200T200-97	0.1017	1.625	5.53	29.805	4.824	4.283	0.410	0.502	29.805	4.298	84.93	7902	28.959	3.819	114.350	7902	5.602	11.945	-0.714	0.476	4.371	0.973
1200T200-118	0.1242	1.984	6.75	36.53	5.876	4.291	0.492	0.498	36.53	5.794	114.5	13189	36.53	5.278	158.02	14434	10.201	14.513	-0.706	0.471	4.377	0.974
1200T250-54[1]	0.0566	0.962	3.27	18.55	3.041	4.392	0.445	0.681	15.021	1.617	31.95	1354	13.756	1.374	41.14	1354	1.027	12.339	-1.039	0.68	4.565	0.948
1200T250-68	0.0713	1.211	4.12	23.435	3.826	4.399	0.556	0.678	20.72	2.451	48.44	2713	19.255	2.106	63.04	2713	2.052	15.529	-1.033	0.676	4.569	0.949
1200T250-97	0.1017	1.727	5.88	33.623	5.442	4.413	0.78	0.672	32.479	4.489	88.7	7902	31.31	3.954	118.37	7902	5.953	22.101	-1.021	0.668	4.579	0.95
1200T250-118	0.1242	2.108	7.17	41.236	6.632	4.423	0.94	0.668	40.963	6.138	121.28	13189	39.954	5.519	165.24	14434	10.839	26.943	-1.013	0.662	4.586	0.951
1200T300-33[1]	0.0346	0.623	2.12	12.588	2.073	4.496	0.460	0.859									0.248	12.405	-1.384	0.889	4.782	0.916
1200T300-43[1]	0.0451	0.811	2.76	16.408	2.698	4.497	0.597	0.857									0.550	16.110	-1.380	0.887	4.781	0.917
1200T300-54[1]	0.0566	1.018	3.46	20.636	3.383	4.502	0.745	0.855	15.856	1.641	32.44	1354	14.451	1.391	41.650	1354	1.087	20.211	-1.375	0.884	4.784	0.917
1200T300-68	0.0713	1.282	4.36	26.079	4.258	4.510	0.932	0.852	21.991	2.501	49.41	2713	20.338	2.140	64.060	2713	2.173	25.471	-1.369	0.880	4.789	0.918
1200T300-97	0.1017	1.828	6.22	37.441	6.060	4.525	1.310	0.847	34.841	4.629	91.46	7902	33.377	4.051	121.300	7902	6.304	36.357	-1.355	0.871	4.799	0.920
1200T300-118	0.1242	2.232	7.6	45.941	7.389	4.537	1.583	0.842	44.194	6.386	126.18	13189	42.885	5.695	170.51	14434	11.478	44.42	-1.346	0.865	4.806	0.922
1200T400-68	0.0713	1.425	4.85	31.366	5.121	4.692	2.08	1.208	25.284	2.769	54.71	2713	24.674	2.27	67.95	2713	2.415	55.338	-2.098	1.311	5.279	0.842
1200T400-97	0.1017	2.032	6.91	45.077	7.296	4.71	2.936	1.202	38.563	5.274	104.22	7902	37.171	4.725	141.46	7902	7.005	79.27	-2.082	1.301	5.288	0.845
1200T400-118	0.1242	2.481	8.44	55.352	8.903	4.724	3.559	1.198	49.649	6.871	135.78	13189	47.518	6.48	194.02	14434	12.755	97.107	-2.071	1.294	5.295	0.847
1350T125-54[1]	0.0566	0.905	3.08	18.15	2.65	4.479	0.061	0.259	16.262	1.698	33.55	1203	15.078	1.459	43.69	1203	0.966	2.362	-0.307	0.214	4.497	0.995
1350T125-68	0.0713	1.14	3.88	22.894	3.33	4.482	0.075	0.257	21.58	2.526	49.91	2409	20.753	2.203	65.96	2409	1.931	2.944	-0.303	0.211	4.5	0.995
1350T125-97	0.1017	1.625	5.53	32.74	4.726	4.489	0.103	0.252	32.677	4.282	84.62	7014	31.658	3.961	118.59	7014	5.602	4.105	-0.296	0.206	4.505	0.996
1350T125-118	0.1242	1.984	6.75	40.054	5.749	4.493	0.123	0.249	40.054	5.577	110.2	12808	39.969	5.212	156.05	12808	10.201	4.928	-0.291	0.202	4.51	0.996
1350T150-54[1]	0.0566	0.933	3.18	19.467	2.842	4.567	0.104	0.334	17.098	1.74	34.38	1203	15.773	1.489	44.57	1203	0.997	3.947	-0.421	0.289	4.599	0.992
1350T150-68	0.0713	1.175	4	24.562	3.573	4.571	0.129	0.332	23.293	2.608	51.53	2409	21.855	2.261	67.68	2409	1.992	4.933	-0.417	0.286	4.602	0.992
1350T150-97	0.1017	1.676	5.7	35.144	5.073	4.579	0.179	0.327	35.067	4.624	91.38	7014	34.16	4.153	124.33	7014	5.778	6.924	-0.408	0.281	4.609	0.992
1350T150-118	0.1242	2.046	6.96	43.016	6.174	4.585	0.213	0.323	43.016	6.000	118.55	12808	42.912	5.631	168.58	12808	10.52	8.353	-0.402	0.276	4.614	0.992
1350T200-54[1]	0.0566	0.99	3.37	22.1	3.227	4.725	0.24	0.493	18.481	1.797	35.5	1203	16.933	1.529	45.78	1203	1.057	8.769	-0.68	0.458	4.799	0.98
1350T200-68	0.0713	1.247	4.24	27.896	4.058	4.73	0.299	0.49	25.437	2.719	53.72	2409	23.666	2.339	70.02	2409	2.113	11.002	-0.675	0.455	4.803	0.98
1350T200-97	0.1017	1.778	6.05	39.954	5.767	4.741	0.418	0.485	39.954	4.955	97.91	7014	38.298	4.374	130.95	7014	6.128	15.561	-0.666	0.448	4.812	0.981
1350T200-118	0.1242	2.17	7.38	48.938	7.024	4.749	0.501	0.481	48.938	6.745	133.29	12808	48.938	6.084	182.17	12808	11.159	18.883	-0.658	0.443	4.818	0.981
1350T250-54[1]	0.0566	1.046	3.56	24.733	3.611	4.862	0.455	0.66	19.647	1.834	36.25	1203	17.905	1.556	46.57	1203	1.117	16.152	-0.974	0.644	5.002	0.962
1350T250-68	0.0713	1.318	4.48	31.231	4.543	4.868	0.569	0.657	27.222	2.792	55.18	2409	25.18	2.39	71.56	2409	2.233	20.311	-0.969	0.64	5.007	0.963
1350T250-97	0.1017	1.879	6.39	44.764	6.461	4.881	0.797	0.651	43.449	5.161	101.99	7014	41.227	4.519	135.3	7014	6.479	28.858	-0.957	0.633	5.016	0.964
1350T250-118	0.1242	2.294	7.81	54.86	7.874	4.89	0.961	0.647	54.611	7.112	140.55	12808	53.395	6.346	189.99	12808	11.797	35.137	-0.949	0.627	5.023	0.964
1350T300-54[1]	0.0566	1.103	3.75	27.366	3.996	4.981	0.764	0.832	20.668	1.862	36.79	1203	18.754	1.574	47.14	1203	1.178	26.494	-1.295	0.842	5.213	0.938
1350T300-68	0.0713	1.389	4.73	34.566	5.028	4.988	0.955	0.829	28.793	2.846	56.23	2409	26.515	2.427	72.67	2409	2.354	33.361	-1.289	0.838	5.218	0.939
1350T300-97	0.1017	1.981	6.74	49.574	7.156	5.003	1.343	0.824	46.466	5.312	104.97	7014	43.8	4.624	138.45	7014	6.829	47.541	-1.276	0.83	5.228	0.94
1350T300-118	0.1242	2.419	8.23	60.782	8.724	5.013	1.623	0.819	58.718	7.381	145.84	12808	57.131	6.535	195.67	12808	12.436	58.014	-1.267	0.824	5.235	0.941
1350T400-68	0.0713	1.532	5.21	41.236	5.998	5.188	2.141	1.182	33.862	3.099	61.24	2409	33.002	2.552	76.41	2409	2.596	72.561	-1.99	1.258	5.681	0.877
1350T400-97	0.1017	2.184	7.43	59.194	8.544	5.206	3.023	1.176	51.002	6.297	124.44	7014	49.671	5.259	157.45	7014	7.531	103.775	-1.976	1.249	5.691	0.879
1350T400-118	0.1242	2.667	9.08	72.626	10.424	5.218	3.663	1.172	65.435	8.167	161.38	12808	62.783	7.733	231.52	12808	13.713	126.976	-1.965	1.243	5.698	0.881
1400T125-54[1]	0.0566	0.933	3.18	19.977	2.814	4.627	0.061	0.256	17.725	1.767	34.91	1160	16.407	1.517	45.420	1160	0.997	2.559	-0.299	0.209	4.643	0.996
1400T125-68	0.0713	1.175	4.00	25.196	3.536	4.630	0.076	0.254	23.552	2.632	52.01	2322	22.620	2.293	68.640	2322	1.992	3.189	-0.296	0.206	4.646	0.996
1400T125-97	0.1017	1.676	5.70	36.024	5.019	4.636	0.104	0.249	35.775	4.480	88.53	6761	34.588	4.134	123.760	6761	5.778	4.445	-0.289	0.201	4.652	0.996
1400T125-118	0.1242	2.046	6.96	44.068	6.106	4.641	0.123	0.245	44.068	5.853	115.67	12344	43.752	5.453	163.27	12344	10.52	5.334	-0.284	0.197	4.656	0.996
1400T150-54[1]	0.0566	0.962	3.27	21.392	3.013	4.717	0.105	0.330	18.620	1.810	35.76	1160	17.153	1.547	46.330	1160	1.027	4.280	-0.410	0.283	4.746	0.993
1400T150-68	0.0713	1.211	4.12	26.987	3.788	4.721	0.130	0.327	25.409	2.717	53.68	2322	23.803	2.352	70.420	2322	2.052	5.349	-0.407	0.280	4.749	0.993
1400T150-97	0.1017	1.727	5.88	38.607	5.379	4.729	0.180	0.322	38.340	4.834	95.52	6761	37.285	4.332	129.690	6761	5.953	7.503	-0.399	0.275	4.756	0.993
1400T150-118	0.1242	2.108	7.17	47.247	6.546	4.734	0.214	0.319	47.247	6.291	124.31	12344	46.911	5.886	176.24	12344	10.839	9.048	-0.393	0.27	4.761	0.993
1400T200-54[1]	0.0566	1.018	3.46	24.221	3.412	4.878	0.242	0.487	20.098	1.868	36.92	1160	18.387	1.589	47.560	1160	1.087	9.520	-0.665	0.449	4.947	0.982
1400T200-68	0.0713	1.282	4.36	30.571	4.291	4.883	0.301	0.485	27.707	2.830	55.93	2322	25.738	2.432	72.810	2322	2.173	11.942	-0.661	0.446	4.951	0.982
1400T200-97	0.1017	1.828	6.22	43.773	6.098	4.893	0.420	0.479	43.679	5.174	102.24	6761	41.749	4.559	136.480	6761	6.304	16.883	-0.651	0.439	4.959	0.983
1400T200-118	0.1242	2.232	7.6	53.606	7.427	4.9	0.504	0.475	53.606	7.062	139.54	12344	53.453	6.354	190.23	12344	11.478	20.479	-0.644	0.434	4.965	0.983
1400T250-54[1]	0.0566	1.075	3.66	27.051	3.811	5.017	0.458	0.653	21.342	1.907	37.68	1160	19.421	1.616	48.38	1160	1.148	17.55	-0.954	0.633	5.149	0.966
1400T250-68	0.0713	1.354	4.61	34.154	4.794	5.023	0.573	0.65	29.615	2.906	57.42	2322	27.352	2.485	74.4	2322	2.294	22.063	-0.949	0.629	5.153	0.966
1400T250-97	0.1017	1.93	6.57	48.939	6.818	5.036	0.803	0.645	47.449	5.386	106.42	6761	44.883	4.708	140.94	6761	6.654	31.333	-0.938	0.622	5.163	0.967
1400T250-118	0.1242	2.356	8.02	59.964	8.308	5.044	0.967	0.641	59.734	7.438	146.99	12344	58.277	6.622	198.25	12344	12.117	38.137	-0.93	0.616	5.169	0.968
1400T300-54[1]	0.0566	1.131	3.85	29.881	4.209	5.139	0.769	0.825	22.429	1.935	38.24	1160	20.324	1.635	48.960	1160	1.208	28.800	-1.271	0.829	5.358	0.944
1400T300-68	0.0713	1.425	4.85	37.737	5.297	5.146	0.962	0.822	31.291	2.961	58.50	2322	28.775	2.523	75.540	2322	2.415	36.257	-1.265	0.825	5.363	0.944
1400T300-97	0.1017	2.032	6.91	54.105	7.538	5.160	1.353	0.816	50.615	5.540	109.48	6761	47.633	4.815	144.170	6761	7.005	51.644	-1.252	0.817	5.373	0.946
1400T300-118	0.1242	2.481	8.44	66.323	9.189	5.171	1.635	0.812	64.159	7.713	152.42	12344	62.201	6.816	204.06	12344	12.755	62.998	-1.243	0.811	5.38	0.947
1400T400-68	0.0713	1.567	5.33	44.903	6.302	5.352	2.16	1.174	37.078	3.21	63.43	2322	35.376	2.647	79.24	2322	2.656	78.896	-1.957	1.242	5.818	0.887
1400T400-97	0.1017	2.235	7.61	64.437	8.977	5.369	3.049	1.168	55.644	6.656	131.52	6761	54.354	5.437	162.79	6761	7.706	112.783	-1.943	1.233	5.828	0.889
1400T400-118	0.1242	2.729	9.29	79.041	10.951	5.382	3.695	1.164	71.315	8.62	170.34	12344	68.478	8.172	244.66	12344	14.032	137.951	-1.932	1.226	5.835	0.89
1000T250-43[1]	0.0451	0.676	2.30	9.515	1.873	3.751	0.344	0.713	7.172	0.876	17.32	822					0.458	6.477	-1.147	0.737	3.987	0.917
1000T250-54	0.0566	0.848	2.89	11.972	2.348	3.757	0.429	0.711	9.913	1.326	26.20	1628	9.141	1.132	33.890	1628	0.906	8.125	-1.142	0.734	3.990	0.918
1000T250-68	0.0713	1.068	3.64	15.138	2.954	3.764	0.536	0.708	13.578	1.997	39.46	3261	12.708	1.726	51.680	3261	1.810	10.240	-1.135	0.730	3.995	0.919
1000T250-97	0.1017	1.523	5.18	21.760	4.202	3.780	0.751	0.702	20.871	3.596	71.05	8843	20.254	3.201	95.840	9507	5.252	14.617	-1.122	0.721	4.005	0.921
1000T250-118	0.1242	1.860	6.33	26.723	5.122	3.791	0.905	0.698	26.538	4.721	93.29	13189	25.721	4.422	132.380	16235	9.562	17.858	-1.112	0.715	4.012	0.923
1000T300-33[1]	0.0346	0.553	1.88	8.184	1.613	3.845	0.441	0.892									0.221	8.147	-1.509	0.953	4.226	0.872
1000T300-43[1]	0.0451	0.721	2.45	10.669	2.100	3.846	0.572	0.891									0.489	10.582	-1.505	0.950	4.225	0.873
1000T300-54	0.0566	0.905	3.08	13.427	2.633	3.852	0.714	0.888	11.083	1.452	28.69	1628	10.826	1.191	35.650	1628	0.966	13.289	-1.500	0.947	4.228	0.874
1000T300-68	0.0713	1.140	3.88	16.985	3.314	3.860	0.893	0.885	14.416	2.377	46.96	3261	14.106	1.904	57.010	3261	1.931	16.771	-1.493	0.943	4.233	0.876
1000T300-97	0.1017	1.625	5.53	24.434	4.719	3.878	1.257	0.879	22.441	3.798	75.04	8843	21.530	3.589	107.450	9507	5.602	24.009	-1.478	0.934	4.242	0.879
1000T300-118	0.1242	1.984	6.75	30.024	5.755	3.890	1.519	0.875	28.792	4.950	97.82	13189	27.680	4.668	139.760	16235	10.201	29.395	-1.468	0.927	4.249	0.881
1000T400-68	0.0713	1.282	4.36	20.678	4.035	4.016	1.982	1.243	16.172	2.330	46.04	3261	15.757	1.894	56.720	3261	2.173	36.414	-2.262	1.388	4.774	0.775
1000T400-97	0.1017	1.828	6.22	29.781	5.751	4.036	2.799	1.237	25.207	4.032	79.68	8843	24.036	3.795	113.630	9507	6.304	52.310	-2.246	1.378	4.782	0.779
1000T400-118	0.1242	2.232	7.60	36.626	7.020	4.051	3.392	1.233	32.638	5.292	104.58	13189	31.116	4.960	148.500	16235	11.478	64.212	-2.234	1.371	4.787	0.782

Section Property Table Notes

1. Web depth for track sections equals nominal depth plus 2 x design thickness plus bend radius.
2. Hems on non-structural track sections are ignored.
3. Effective properties include the strength increase from cold-work of forming per NASPEC section A7.2 where applicable. Where Allowable Moment, Ma is followed by '*', a stress increase from cold-work of forming has been applied.
4. For deflection determination, use the effective moment of inertia. Effective moment of inertia is based on Procedure 1 of the NASPEC.
5. Section properties meet the 2009 and 2012 International Building Code.

LIMITING WALL HEIGHTS - STRUCTURAL

	Fy (ksi)	Spacing (in) oc	5 psf			15 psf			20 psf			25 psf			30 psf			35 psf			40 psf			50 psf		
			L/120	L/240	L/360	L/240	L/360	L/600	L/240	L/360	L/600	L/240	L/360	L/600	L/240	L/360	L/600	L/240	L/360	L/600	L/240	L/360	L/600	L/240	L/360	L/600
350S137-33	33	12	22' 7"	17' 11"	15' 8"	14' 0"	12' 3"	10' 4"	12' 2"	11' 2"	9' 5"	10' 10"	10' 4"	8' 9"	9' 11"	9' 9"	8' 2"	9' 2"	9' 2"	7' 9"	8' 7" e	8' 7" e	7' 5"	7' 8" e	7' 8" e	6' 11" e
350S137-33	33	16	20' 7"	16' 4"	14' 3"	12' 2"	11' 2"	9' 5"	10' 6"	10' 1"	8' 6"	9' 5"	9' 5"	7' 11"	8' 7" e	8' 7" e	7' 5"	7' 11" e	7' 11" e	7' 1"	7' 5" e	7' 5" e	6' 9" e	6' 8" e	6' 8" e	6' 3" e
350S137-33	33	24	17' 2"	14' 3"	12' 5"	9' 11"	9' 9"	8' 2"	8' 7" e	8' 7" e	7' 5"	7' 8" e	7' 8" e	6' 11" e	7' 0" e	7' 0" e	6' 6" e	6' 6" e	6' 6" e	6' 2" e	6' 1" e	6' 1" e	5' 11" e	5' 5" e	5' 5" e	5' 5" e
350S162-33	33	12	23' 9"	18' 10"	16' 5"	14' 8"	12' 10"	10' 10"	13' 0"	11' 8"	9' 10"	11' 8"	10' 10"	9' 2"	10' 8"	10' 2"	8' 7"	9' 10" e	9' 8" e	8' 2"	9' 2" e	9' 2" e	7' 10"	8' 3" e	8' 3" e	7' 3" e
350S162-33	33	16	21' 7"	17' 1"	14' 11"	13' 0"	11' 8"	9' 10"	11' 3"	10' 7"	8' 11"	10' 1" e	9' 10"	8' 4"	9' 2" e	9' 2" e	7' 10"	8' 6" e	8' 6" e	7' 5" e	8' 0" e	8' 0" e	7' 1" e	7' 2" e	7' 2" e	6' 7" e
350S162-33	33	24	18' 5"	14' 11"	13' 1"	10' 8"	10' 2"	8' 7"	9' 2" e	9' 2" e	7' 10"	8' 3" e	8' 3" e	7' 3" e	7' 6" e	7' 6" e	6' 10" e	7' 0" e	7' 0" e	6' 6" e	6' 6" e	6' 6" e	6' 2" e	5' 10" e	5' 10" e	5' 9" e
350S200-33	33	12	25' 0"	19' 10"	17' 4"	15' 6"	13' 7"	11' 5"	13' 8"	12' 4"	10' 5"	12' 2"	11' 5"	9' 8"	11' 2" e	10' 9"	9' 1"	10' 4" e	10' 3" e	8' 7"	9' 8" e	9' 8" e	8' 3"	8' 8" e	8' 8" e	7' 8" e
350S200-33	33	16	22' 9"	18' 1"	15' 9"	13' 8"	12' 4"	10' 5"	11' 10"	11' 2"	9' 5"	10' 7" e	10' 5" e	8' 9"	9' 8" e	9' 8" e	8' 3"	8' 11" e	8' 11" e	7' 10" e	8' 4" e	8' 4" e	7' 6" e	7' 6" e	7' 6" e	6' 11" e
350S200-33	33	24	19' 4"	15' 9"	13' 9"	11' 2" e	10' 9"	9' 1"	9' 8" e	9' 8" e	8' 3"	8' 8" e	8' 8" e	7' 8" e	7' 11" e	7' 11" e	7' 2" e	7' 4" e	7' 4" e	6' 10" e	6' 10" e	6' 10" e	6' 7" e	6' 1" e	6' 1" e	6' 1" e
350S137-43	33	12	24' 7"	19' 6"	17' 1"	15' 3"	13' 4"	11' 3"	13' 10"	12' 1"	10' 2"	12' 9"	11' 3"	9' 6"	11' 7"	10' 7"	8' 11"	10' 9"	10' 1"	8' 6"	10' 1"	9' 7"	8' 1"	9' 0"	8' 11"	7' 6"
350S137-43	33	16	22' 4"	17' 9"	15' 6"	13' 10"	12' 1"	10' 2"	12' 4"	11' 0"	9' 3"	11' 0"	10' 2"	8' 7"	10' 1"	9' 7"	8' 1"	9' 4"	9' 1"	7' 8"	8' 9"	8' 9"	7' 4"	7' 9"	7' 9"	6' 10"
350S137-43	33	24	19' 6"	15' 6"	13' 6"	11' 7"	10' 7"	8' 11"	10' 1"	9' 7"	8' 1"	9' 0"	8' 11"	7' 6"	8' 3"	8' 3"	7' 1"	7' 7"	7' 7"	6' 9"	7' 1" e	7' 1" e	6' 5"	6' 4" e	6' 4" e	6' 0" e
350S162-43	33	12	25' 10"	20' 6"	17' 11"	16' 0"	14' 0"	11' 9"	14' 6"	12' 8"	10' 8"	13' 6"	11' 9"	9' 11"	12' 6"	11' 1"	9' 4"	11' 7"	10' 6"	8' 11"	10' 10"	10' 1"	8' 6"	9' 8"	9' 4"	7' 11"
350S162-43	33	16	23' 5"	18' 7"	16' 3"	14' 6"	12' 8"	10' 8"	13' 2"	11' 6"	9' 9"	11' 10"	10' 8"	9' 0"	10' 10"	10' 1"	8' 6"	10' 0"	9' 7"	8' 1"	9' 5"	9' 2"	7' 9"	8' 5" e	8' 5" e	7' 2"
350S162-43	33	24	20' 6"	16' 3"	14' 2"	12' 6"	11' 1"	9' 4"	10' 10"	10' 1"	8' 6"	9' 8"	9' 4"	7' 11"	8' 10"	8' 10"	7' 5"	8' 2" e	8' 2" e	7' 1"	7' 8" e	7' 8" e	6' 9"	6' 10" e	6' 10" e	6' 3" e
350S200-43	33	12	27' 3"	21' 7"	18' 11"	16' 11"	14' 9"	12' 5"	15' 4"	13' 5"	11' 4"	14' 3"	12' 5"	10' 6"	13' 5"	11' 9"	9' 11"	12' 5"	11' 1"	9' 5"	11' 7"	10' 8"	9' 0"	10' 5"	9' 11"	8' 4"
350S200-43	33	16	24' 9"	19' 8"	17' 2"	15' 4"	13' 5"	11' 4"	13' 11"	12' 2"	10' 3"	12' 9"	11' 4"	9' 6"	11' 7"	10' 8"	9' 0"	10' 9"	10' 1"	8' 6"	10' 1"	9' 8"	8' 2"	9' 0" e	9' 0" e	7' 7"
350S200-43	33	24	21' 7"	17' 2"	15' 0"	13' 5"	11' 9"	9' 11"	11' 7"	10' 8"	9' 0"	10' 5"	9' 11"	8' 4"	9' 6" e	9' 4" e	7' 10"	8' 9" e	8' 9" e	7' 5"	8' 3" e	8' 3" e	7' 1" e	7' 4" e	7' 4" e	6' 7" e
350S137-54	50	12	26' 4"	20' 11"	18' 3"	16' 4"	14' 3"	12' 0"	14' 10"	12' 11"	10' 11"	13' 9"	12' 0"	10' 2"	12' 11"	11' 4"	9' 7"	12' 4"	10' 9"	9' 1"	11' 9"	10' 3"	8' 8"	10' 11"	9' 7"	8' 1"
350S137-54	50	16	23' 11"	19' 0"	16' 7"	14' 10"	12' 11"	10' 11"	13' 6"	11' 9"	9' 11"	12' 6"	10' 11"	9' 3"	11' 9"	10' 3"	8' 8"	11' 2"	9' 9"	8' 3"	10' 8"	9' 4"	7' 11"	9' 11"	8' 8"	7' 4"
350S137-54	50	24	20' 11"	16' 7"	14' 6"	12' 11"	11' 4"	9' 7"	11' 9"	10' 3"	8' 8"	10' 11"	9' 7"	8' 1"	10' 3"	9' 0"	7' 7"	9' 9"	8' 6"	7' 2"	9' 4"	8' 2"	6' 11"	8' 7"	7' 7"	6' 5"
350S162-54	50	12	27' 8"	21' 11"	19' 2"	17' 1"	15' 0"	12' 7"	15' 7"	13' 7"	11' 6"	14' 5"	12' 7"	10' 8"	13' 7"	11' 10"	10' 0"	12' 11"	11' 3"	9' 6"	12' 4"	10' 9"	9' 1"	11' 6"	10' 0"	8' 5"
350S162-54	50	16	25' 1"	19' 11"	17' 5"	15' 7"	13' 7"	11' 6"	14' 2"	12' 4"	10' 5"	13' 1"	11' 6"	9' 8"	12' 4"	10' 9"	9' 1"	11' 9"	10' 3"	8' 8"	11' 3"	9' 10"	8' 3"	10' 5"	9' 1"	7' 8"
350S162-54	50	24	21' 11"	17' 5"	15' 2"	13' 7"	11' 10"	10' 0"	12' 4"	10' 9"	9' 1"	11' 6"	10' 0"	8' 5"	10' 9"	9' 5"	7' 11"	10' 3"	8' 11"	7' 7"	9' 10"	8' 7"	7' 3"	9' 1"	7' 11"	6' 8"
350S200-54	50	12	29' 2"	23' 2"	20' 3"	18' 1"	15' 10"	13' 4"	16' 5"	14' 4"	12' 1"	15' 3"	13' 4"	11' 3"	14' 4"	12' 7"	10' 7"	13' 8"	11' 11"	10' 1"	13' 1"	11' 5"	9' 7"	12' 1"	10' 7"	8' 11"
350S200-54	50	16	26' 6"	21' 1"	18' 5"	16' 5"	14' 4"	12' 1"	14' 11"	13' 1"	11' 0"	13' 10"	12' 1"	10' 3"	13' 1"	11' 5"	9' 7"	12' 5"	10' 10"	9' 2"	11' 10"	10' 4"	8' 9"	11' 0"	9' 7"	8' 1"
350S200-54	50	24	23' 2"	18' 5"	16' 1"	14' 4"	12' 7"	10' 7"	13' 1"	11' 5"	9' 7"	12' 1"	10' 7"	8' 11"	11' 5"	10' 0"	8' 5"	10' 10"	9' 6"	8' 0"	10' 4"	9' 1"	7' 8"	9' 7"	8' 5"	7' 1"
350S137-68	50	12	28' 2"	22' 4"	19' 6"	17' 5"	15' 3"	12' 10"	15' 10"	13' 10"	11' 8"	14' 8"	12' 10"	10' 10"	13' 10"	12' 1"	10' 2"	13' 2"	11' 6"	9' 8"	12' 7"	11' 0"	9' 3"	11' 8"	10' 2"	8' 7"
350S137-68	50	16	25' 7"	20' 3"	17' 9"	15' 10"	13' 10"	11' 8"	14' 5"	12' 7"	10' 7"	13' 4"	11' 8"	9' 10"	12' 7"	11' 0"	9' 3"	11' 11"	10' 5"	8' 10"	11' 5"	10' 0"	8' 5"	10' 7"	9' 3"	7' 10"
350S137-68	50	24	22' 4"	17' 9"	15' 6"	13' 10"	12' 1"	10' 2"	12' 7"	11' 0"	9' 3"	11' 8"	10' 2"	8' 7"	11' 0"	9' 7"	8' 1"	10' 5"	9' 1"	7' 8"	10' 0"	8' 9"	7' 4"	9' 3"	8' 1"	6' 10"
350S162-68	50	12	29' 7"	23' 5"	20' 6"	18' 4"	16' 0"	13' 6"	16' 8"	14' 6"	12' 3"	15' 5"	13' 6"	11' 5"	14' 6"	12' 8"	10' 9"	13' 10"	12' 1"	10' 2"	13' 3"	11' 6"	9' 9"	12' 3"	10' 9"	9' 0"
350S162-68	50	16	26' 10"	21' 4"	18' 7"	16' 8"	14' 6"	12' 3"	15' 1"	13' 3"	11' 2"	14' 0"	12' 3"	10' 4"	13' 3"	11' 6"	9' 9"	12' 7"	11' 0"	9' 3"	12' 0"	10' 6"	8' 10"	11' 2"	9' 9"	8' 3"
350S162-68	50	24	23' 5"	18' 7"	16' 3"	14' 6"	12' 8"	10' 9"	13' 3"	11' 6"	9' 9"	12' 3"	10' 9"	9' 0"	11' 6"	10' 1"	8' 6"	11' 0"	9' 7"	8' 1"	10' 6"	9' 2"	7' 9"	9' 9"	8' 6"	7' 2"
350S200-68	50	12	31' 3"	24' 10"	21' 8"	19' 5"	16' 11"	14' 3"	17' 7"	15' 5"	13' 0"	16' 4"	14' 3"	12' 1"	15' 5"	13' 5"	11' 4"	14' 7"	12' 9"	10' 9"	14' 0"	12' 3"	10' 4"	13' 0"	11' 4"	9' 7"
350S200-68	50	16	28' 5"	22' 7"	19' 8"	17' 7"	15' 5"	13' 0"	16' 0"	14' 0"	11' 9"	14' 10"	13' 0"	10' 11"	14' 0"	12' 3"	10' 4"	13' 3"	11' 7"	9' 9"	12' 8"	11' 1"	9' 4"	11' 9"	10' 4"	8' 8"
350S200-68	50	24	24' 10"	19' 8"	17' 3"	15' 5"	13' 5"	11' 4"	14' 0"	12' 3"	10' 4"	13' 0"	11' 4"	9' 7"	12' 3"	10' 8"	9' 0"	11' 7"	10' 2"	8' 7"	11' 1"	9' 8"	8' 2"	10' 4"	9' 0"	7' 7"
362S137-33	33	12	23' 3"	18' 5"	16' 1"	14' 3"	12' 7"	10' 7"	12' 4"	11' 5"	9' 8"	11' 1"	10' 7"	8' 11"	10' 1"	10' 0"	8' 5"	9' 4"	9' 4"	8' 0"	8' 9" e	8' 9" e	7' 8"	7' 10" e	7' 10" e	7' 1" e
362S137-33	33	16	21' 1"	16' 9"	14' 8"	12' 4"	11' 5"	9' 8"	10' 9"	10' 5"	8' 9"	9' 7"	9' 7"	8' 2"	8' 9" e	8' 9" e	7' 8"	8' 1" e	8' 1" e	7' 3" e	7' 7" e	7' 7" e	6' 11" e	6' 9" e	6' 9" e	6' 5" e
362S137-33	33	24	17' 6"	14' 8"	12' 10"	10' 1"	10' 0"	8' 5"	8' 9" e	8' 9" e	7' 8"	7' 10" e	7' 10" e	7' 1" e	7' 2" e	7' 2" e	6' 8" e	6' 7" e	6' 7" e	6' 4" e	6' 2" e	6' 2" e	6' 1" e	5' 6" e	5' 6" e	5' 6" e
362S162-33	33	12	24' 4"	19' 4"	16' 11"	15' 1"	13' 2"	11' 1"	13' 3"	12' 0"	10' 1"	11' 11"	11' 1"	9' 5"	10' 10"	10' 6"	8' 10"	10' 0" e	9' 11" e	8' 5"	9' 5" e	9' 5" e	8' 0"	8' 5" e	8' 5" e	7' 5" e
362S162-33	33	16	22' 2"	17' 7"	15' 4"	13' 3"	12' 0"	10' 1"	11' 6"	10' 11"	9' 2"	10' 3" e	10' 1" e	8' 6"	9' 5" e	9' 5" e	8' 0"	8' 8" e	8' 8" e	7' 7" e	8' 2" e	8' 2" e	7' 3" e	7' 3" e	7' 3" e	6' 9" e
362S162-33	33	24	18' 9"	15' 4"	13' 5"	10' 10"	10' 6"	8' 10"	9' 5" e	9' 5" e	8' 0"	8' 5" e	8' 5" e	7' 5" e	7' 8" e	7' 8" e	7' 0" e	7' 1" e	7' 1" e	6' 8" e	6' 8" e	6' 8" e	6' 4" e	5' 11" e	5' 11" e	5' 11" e
362S200-33	33	12	25' 9"	20' 5"	17' 10"	15' 11"	13' 11"	11' 9"	13' 11"	12' 8"	10' 8"	12' 5"	11' 9"	9' 11"	11' 4" e	11' 1" e	9' 4"	10' 6" e	10' 6" e	8' 10"	9' 10" e	9' 10" e	8' 6" e	8' 10" e	8' 10" e	7' 10" e
362S200-33	33	16	23' 4"	18' 7"	16' 2"	13' 11"	12' 8"	10' 8"	12' 1"	11' 6"	9' 8"	10' 9" e	10' 8" e	9' 0"	9' 10" e	9' 10" e	8' 6" e	9' 1" e	9' 1" e	8' 1" e	8' 6" e	8' 6" e	7' 8" e	7' 7" e	7' 7" e	7' 2" e
362S200-33	33	24	19' 8"	16' 2"	14' 2"	11' 4" e	11' 1" e	9' 4"	9' 10" e	9' 10" e	8' 6" e	8' 10" e	8' 10" e	7' 10" e	8' 0" e	8' 0" e	7' 5" e	7' 5" e	7' 5" e	7' 0" e	7' 0" e	7' 0" e	6' 9" e	6' 3" e	6' 3" e	6' 3" e
362S137-43	33	12	25' 3"	20' 1"	17' 6"	15' 8"	13' 8"	11' 7"	14' 3"	12' 5"	10' 6"	13' 0"	11' 7"	9' 9"	11' 10"	10' 10"	9' 2"	11' 0"	10' 4"	8' 8"	10' 3"	9' 10"	8' 4"	9' 2"	9' 2"	7' 9"
362S137-43	33	16	23' 0"	18' 3"	15' 11"	14' 3"	12' 5"	10' 6"	12' 7"	11' 4"	9' 6"	11' 3"	10' 6"	8' 10"	10' 3"	9' 10"	8' 4"	9' 6"	9' 5"	7' 11"	8' 11"	8' 11"	7' 7"	7' 11"	7' 11"	7' 0"
362S137-43	33	24	20' 1"	15' 11"	13' 11"	11' 10"	10' 10"	9' 2"	10' 3"	9' 10"	8' 4"	9' 2"	9' 2"	7' 9"	8' 5"	8' 5"	7' 3"	7' 9"	7' 9"	6' 11"	7' 3" e	7' 3" e	6' 7"	6' 6" e	6' 6" e	6' 2" e
362S162-43	33	12	26' 6"	21' 0"	18' 4"	16' 5"	14' 4"	12' 1"	14' 11"	13' 0"	11' 0"	13' 10"	12' 1"	10' 2"	12' 9"	11' 5"	9' 7"	11' 10"	10' 10"	9' 1"	11' 1"	10' 4"	8' 9"	9' 11"	9' 7"	8' 1"
362S162-43	33	16	24' 1"	19' 1"	16' 8"	14' 11"	13' 0"	11' 0"	13' 7"	11' 10"	10' 0"	12' 1"	11' 0"	9' 3"	11' 1"	10' 4"	8' 9"	10' 3"	9' 10"	8' 3"	9' 7"	9' 5"	7' 11"	8' 7" e	8' 7" e	7' 4"
362S162-43	33	24	21' 0"	16' 8"	14' 7"	12' 9"	11' 5"	9' 7"	11' 1"	10' 4"	8' 9"	9' 11"	9' 7"	8' 1"	9' 0"	9' 0"	7' 7"	8' 4" e	8' 4" e	7' 3"	7' 10" e	7' 10" e	6' 11" e	7' 0" e	7' 0" e	6' 5" e
362S200-43	33	12	28' 0"	22' 3"	19' 5"	17' 4"	15' 2"	12' 9"	15' 9"	13' 9"	11' 7"	14' 8"	12' 9"	10' 9"	13' 8"	12' 0"	10' 2"	12' 8"	11' 5"	9' 8"	11' 10"	10' 11"	9' 3"	10' 7"	10' 2"	8' 7"
362S200-43	33	16	25' 5"	20' 2"	17' 8"	15' 9"	13' 9"	11' 7"	14' 4"	12' 6"	10' 7"	13' 0"	11' 7"	9' 10"	11' 10"	10' 11"	9' 3"	11' 0"	10' 5"	8' 9"	10' 3"	9' 11"	8' 4"	9' 2" e	9' 2" e	7' 9"
362S200-43	33	24	22' 3"	17' 8"	15' 5"	13' 8"	12' 0"	10' 2"	11' 10"	10' 11"	9' 3"	10' 7"	10' 2"	8' 7"	9' 8" e	9' 7" e	8' 1"	9' 0" e	9' 0" e	7' 8"	8' 5" e	8' 5" e	7' 4" e	7' 6" e	7' 6" e	6' 9" e
362S137-54	50	12	27' 1"	21' 6"	18' 9"	16' 9"	14' 8"	12' 4"	15' 3"	13' 4"	11' 3"	14' 2"	12' 4"	10' 5"	13' 4"	11' 8"	9' 10"	12' 8"	11' 1"	9' 4"	12' 1"	10' 7"	8' 11"	11' 3"	9' 10"	8' 3"
362S137-54	50	16	24' 7"	19' 6"	17' 1"	15' 3"	13' 4"	11' 3"	13' 10"	12' 1"	10' 2"	12' 10"	11' 3"	9' 6"	12' 1"	10' 7"	8' 11"	11' 6"	10' 0"	8' 6"	11' 0"	9' 7"	8' 1"	10' 2"	8' 11"	7' 6"
362S137-54	50	24	21' 6"	17' 1"	14' 11"	13' 4"	11' 8"	9' 10"	12' 1"	10' 7"	8' 11"	11' 3"	9' 10"	8' 3"	10' 7"	9' 3"	7' 9"	10' 0"	8' 9"	7' 5"	9' 7"	8' 5"	7' 1"	8' 9"	7' 9"	6' 7"
362S162-54	50	12	28' 5"	22' 6"	19' 8"	17' 7"	15' 4"	13' 0"	16' 0"	14' 0"	11' 9"	14' 10"	13' 0"	10' 11"	14' 0"	12' 2"	10' 3"	13' 3"	11' 7"	9' 9"	12' 8"	11' 1"	9' 4"	11' 9"	10' 3"	8' 8"
362S162-54	50	16	25' 10"	20' 6"	17' 11"	16' 0"	14' 0"	11' 9"	14' 6"	12' 8"	10' 8"	13' 6"	11' 9"	9' 11"	12' 8"	11' 1"	9' 4"	12' 1"	10' 6"	8' 11"	11' 6"	10' 1"	8' 6"	10' 8"	9' 4"	7' 11"
362S162-54	50	24	22' 6"	17' 11"	15' 7"	14' 0"	12' 2"	10' 3"	12' 8"	11' 1"	9' 4"	11' 9"	10' 3"	8' 8"	11' 1"	9' 8"	8' 2"	10' 6"	9' 2"	7' 9"	10' 1"	8' 10"	7' 5"	9' 4"	8' 2"	6' 11"
362S200-54	50	12	30' 0"	23' 10"	20' 10"	18' 7"	16' 3"	13' 8"	16' 11"	14' 9"	12' 5"	15' 8"	13' 8"	11' 7"	14' 9"	12' 11"	10' 10"	14' 0"	12' 3"	10' 4"	13' 5"	11' 9"	9' 11"	12' 5"	10' 10"	9' 2"
362S200-54	50	16	27' 3"	21' 8"	18' 11"	16' 11"	14' 9"	12' 5"	15' 4"	13' 5"	11' 4"	14' 3"	12' 5"	10' 6"	13' 5"	11' 9"	9' 11"	12' 9"	11' 2"	9' 5"	12' 2"	10' 8"	9' 0"	11' 4"	9' 11"	8' 4"
362S200-54	50	24	23' 10"	18' 11"	16' 6"	14' 9"	12' 11"	10' 10"	13' 5"	11' 9"	9' 11"	12' 5"	10' 10"	9' 2"	11' 9"	10' 3"	8' 8"	11' 2"	9' 9"	8' 2"	10' 8"	9' 4"	7' 10"	9' 11"	8' 8"	7' 3"
362S250-54	50	12	31' 8"	25' 2"	21' 11"	19' 7"	17' 2"	14' 5"	17' 10"	15' 7"	13' 2"	16' 7"	14' 5"	12' 2"	15' 7"	13' 7"	11' 6"	14' 10"	12' 11"	10' 11"	14' 2"	12' 4"	10' 5"	13' 2"	11' 6"	9' 8"
362S250-54	50	16	28' 9"	22' 10"	19' 11"	17' 10"	15' 7"	13' 2"	16' 2"	14' 2"	11' 11"	15' 0"	13' 2"	11' 1"	14' 2"	12' 4"	10' 5"	13' 5"	11' 9"	9' 11"	12' 10"	11' 3"	9' 6"	11' 11"	10' 5"	8' 10"
362S250-54	50	24	25' 2"	19' 11"	17' 5"	15' 7"	13' 7"	11' 6"	14' 2"	12' 4"	10' 5"	13' 2"	11' 6"	9' 8"	12' 4"	10' 10"	9' 1"	11' 9"	10' 3"	8' 8"	11' 3"	9' 10"	8' 3"	10' 2"	9' 1"	7' 8"
362S300-54	50	12	33' 2"	26' 4"	23' 0"	20' 7"	17' 11"	15' 2"	18' 8"	16' 4"	13' 9"	17' 4"	15' 2"	12' 9"	16' 4"	14' 3"	12' 0"	15' 6"	13' 6"	11' 5"	14' 10"	12' 11"	10' 11"	13' 9"	12' 0"	10' 2"
362S300-54	50	16	30' 2"	23' 11"	20' 11"	18' 8"	16' 4"	13' 9"	17' 0"	14' 10"	12' 6"	15' 9"	13' 9"	11' 7"	14' 10"	12' 11"	10' 11"	14' 1"	12' 4"	10' 4"	13' 6"	11' 9"	9' 11"	12' 6"	10' 11"	9' 3"
362S300-54	50	24	26' 4"	20' 11"	18' 3"	16' 4"	14' 3"	12' 0"	14' 10"	12' 11"	10' 11"	13' 9"	12' 0"	10' 2"	12' 11"	11' 4"	9' 6"	12' 3"	10' 9"	9' 1"	11' 6"	10' 3"	8' 8"	10' 3"	9' 6"	8' 1"
362S137-68	50	12	28' 11"	22' 11"	20' 1"	17' 11"	15' 8"	13' 2"	16' 3"	14' 3"	12' 0"	15' 1"	13' 2"	11' 2"	14' 3"	12' 5"	10' 6"	13' 6"	11' 10"	9' 11"	12' 11"	11' 4"	9' 6"	12' 0"	10' 6"	8' 10"
362S137-68	50	16	26' 3"	20' 10"	18' 3"	16' 3"	14' 3"	12' 0"	14' 10"	12' 11"	10' 11"	13' 9"	12' 0"	10' 1"	12' 11"	11' 4"	9' 6"	12' 3"	10' 9"	9' 1"	11' 9"	10' 3"	8' 8"	10' 11"	9' 6"	8' 0"
362S137-68	50	24	22' 11"	18' 3"	15' 11"	14' 3"	12' 5"	10' 6"	12' 11"	11' 4"	9' 6"	12' 0"	10' 6"	8' 10"	11' 4"	9' 10"	8' 4"	10' 9"	9' 4"	7' 11"	10' 3"	9' 0"	7' 7"	9' 6"	8' 4"	7' 0"
362S162-68	50	12	30' 4"	24' 1"	21' 1"	18' 10"	16' 5"	13' 10"	17' 1"	14' 11"	12' 7"	15' 11"	13' 10"	11' 8"	14' 11"	13' 1"	11' 0"	14' 2"	12' 5"	10' 5"	13' 7"	11' 10"	10' 0"	12' 7"	11' 0"	9' 3"
362S162-68	50	16	27' 7"	21' 11"	19' 2"	17' 1"	14' 11"	12' 7"	15' 6"	13' 7"	11' 5"	14' 5"	12' 7"	10' 8"	13' 7"	11' 10"	10' 0"	12' 11"	11' 3"	9' 6"	12' 4"	10' 9"	9' 1"	11' 5"	10' 0"	8' 5"
362S162-68	50	24	24' 1"	19' 2"	16' 9"	14' 11"	13' 1"	11' 0"	13' 7"	11' 10"	10' 0"	12' 7"	11' 0"	9' 3"	11' 10"	10' 4"	8' 9"	11' 3"	9' 10"	8' 4"	10' 9"	9' 5"	7' 11"	10' 0"	8' 9"	7' 4"
362S200-68	50	12	32' 2"	25' 6"	22' 3"	19' 11"	17' 5"	14' 8"	18' 1"	15' 10"	13' 4"	16' 10"	14' 8"	12' 5"	15' 10"	13' 10"	11' 8"	15' 0"	13' 1"	11' 1"	14' 4"	12' 7"	10' 7"	13' 4"	11' 8"	9' 10"
362S200-68	50	16	29' 2"	23' 2"	20' 3"	18' 1"	15' 10"	13' 4"	16' 5"	14' 4"	12' 1"	15' 3"	13' 4"	11' 3"	14' 4"	12' 7"	10' 7"	13' 8"	11' 11"	10' 1"	13' 1"	11' 5"	9' 7"	12' 1"	10' 7"	8' 11"
362S200-68	50	24	25' 6"	20' 3"	17' 8"	15' 10"	13' 10"	11' 8"	14' 4"	12' 7"	10' 7"	13' 4"	11' 8"	9' 10"	12' 7"	11' 0"	9' 3"	11' 11"	10' 5"	8' 9"	11' 5"	9' 11"	8' 5"	10' 7"	9' 3"	7' 10"
362S250-68	50	12	33' 11"	26' 11"	23' 6"	21' 0"	18' 4"	15' 6"	19' 1"	16' 8"	14' 1"	17' 9"	15' 6"	13' 1"	16' 8"	14' 7"	12' 4"	15' 10"	13' 10"	11' 8"	15' 2"	13' 3"	11' 2"	14' 1"	12' 4"	10' 4"
362S250-68	50	16	30' 10"	24' 6"	21' 5"	19' 1"	16' 8"	14' 1"	17' 4"	15' 2"	12' 10"	16' 1"	14' 1"	11' 11"	15' 2"	13' 3"	11' 2"	14' 5"	12' 7"	10' 7"	13' 9"	12' 0"	10' 2"	12' 10"	11' 2"	9' 5"
362S250-68	50	24	26' 11"	21' 5"	18' 8"	16' 8"	14' 7"	12' 4"	15' 2"	13' 3"	11' 2"	14' 1"	12' 4"	10' 4"	13' 3"	11' 7"	9' 9"	12' 7"	11' 0"	9' 3"	12' 0"	10' 6"	8' 10"	11' 2"	9' 9"	8' 3"
362S300-68	50	12	35' 7"	28' 3"	24' 8"	22' 1"	19' 3"	16' 3"	20' 0"	17' 6"	14' 9"	18' 7"	16' 3"	13' 8"	17' 6"	15' 3"	12' 11"	16' 7"	14' 6"	12' 3"	15' 11"	13' 11"	11' 9"	14' 9"	12' 11"	10' 10"
362S300-68	50	16	32' 4"	25' 8"	22' 5"	20' 0"	17' 6"	14' 9"	18' 2"	15' 11"	13' 5"	16' 11"	14' 9"	12' 5"	15' 11"	13' 11"	11' 9"	15' 1"	13' 2"	11' 2"	14' 5"	12' 7"	10' 8"	13' 5"	11' 9"	9' 11"
362S300-68	50	24	28' 3"	22' 5"	19' 7"	17' 6"	15' 3"	12' 11"	15' 11"	13' 11"	11' 9"	14' 9"	12' 11"	10' 10"	13' 11"	12' 2"	10' 3"	13' 2"	11' 6"	9' 9"	12' 7"	11' 0"	9' 4"	11' 9"	10' 3"	8' 8"
362S250-97	50	12	37' 7"	29' 10"	26' 1"	23' 4"	20' 4"	17' 2"	21' 2"	18' 6"	15' 7"	19' 8"	17' 2"	14' 6"	18' 6"	16' 2"	13' 8"	17' 7"	15' 4"	12' 11"	16' 10"	14' 8"	12' 5"	15' 7"	13' 8"	11' 6"
362S250-97	50	16	34' 2"	27' 1"	23' 8"	21' 2"	18' 6"	15' 7"	19' 3"	16' 10"	14' 2"	17' 10"	15' 7"	13' 2"	16' 10"	14' 8"	12' 5"	16' 0"	13' 11"	11' 9"	15' 3"	13' 4"	11' 3"	14' 2"	12' 5"	10' 5"
362S250-97	50	24	29' 10"	23' 8"	20' 8"	18' 6"	16' 2"	13' 8"	16' 10"	14' 8"	12' 5"	15' 7"	13' 8"	11' 6"	14' 8"	12' 10"	10' 10"	13' 11"	12' 2"	10' 3"	13' 4"	11' 8"	9' 10"	12' 5"	10' 10"	9' 1"
362S300-97	50	12	39' 5"	31' 4"	27' 4"	24' 5"	21' 4"	18' 0"	22' 3"	19' 5"	16' 4"	20' 8"	18' 0"	15' 2"	19' 5"	16' 11"	14' 4"	18' 5"	16' 1"	13' 7"	17' 8"	15' 5"	13' 0"	16' 4"	14' 4"	12' 1"
362S300-97	50	16	35' 10"	28' 5"	24' 10"	22' 3"	19' 5"	16' 4"	20' 2"	17' 8"	14' 10"	18' 9"	16' 4"	13' 10"	17' 8"	15' 5"	13' 0"	16' 9"	14' 8"	12' 4"	16' 0"	14' 0"	11' 10"	14' 10"	13' 0"	11' 0"
362S300-97	50	24	31' 4"	24' 10"	21' 9"	19' 5"	16' 11"	14' 4"	17' 8"	15' 5"	13' 0"	16' 4"	14' 4"	12' 1"	15' 5"	13' 5"	11' 4"	14' 8"	12' 9"	10' 9"	14' 0"	12' 3"	10' 4"	13' 0"	11' 4"	9' 7"
400S137-33	33	12	25' 1"	19' 11"	17' 5"	15' 1"	13' 7"	11' 6"	13' 1"	12' 4"	10' 5"	11' 8"	11' 6"	9' 8"	10' 8"	10' 8"	9' 1"	9' 10" e	9' 10" e	8' 8"	9' 3" e	9' 3" e	8' 3" e	8' 3" e	8' 3" e	7' 8" e
400S137-33	33	16	22' 7"	18' 1"	15' 10"	13' 1"	12' 4"	10' 5"	11' 4"	11' 3"	9' 6"	10' 1" e	10' 1" e	8' 9"	9' 3" e	9' 3" e	8' 3" e	8' 7" e	8' 7" e	7' 10" e	8' 0" e	8' 0" e	7' 6" e	7' 2" e	7' 2" e	7' 0" e
400S137-33	33	24	18' 6"	15' 10"	13' 10"	10' 8"	10' 8"	9' 1"	9' 3" e	9' 3" e	8' 3" e	8' 3" e	8' 3" e	7' 8" e	7' 6" e	7' 6" e	7' 3" e	7' 0" e	7' 0" e	6' 10" e	6' 6" e	6' 6" e	6' 6" e	5' 10" e	5' 10" e	5' 10" e
400S162-33	33	12	26' 3"	20' 10"	18' 3"	16' 2"	14' 3"	12' 0"	14' 0"	12' 11"	10' 11"	12' 7"	12' 0"	10' 1"	11' 5" e	11' 4" e	9' 6"	10' 7" e	10' 7" e	9' 1"	9' 11" e	9' 11" e	8' 8" e	8' 10" e	8' 10" e	8' 0" e
400S162-33	33	16	23' 11"	18' 11"	16' 7"	14' 0"	12' 11"	10' 11"	12' 2"	11' 9"	9' 11"	10' 10" e	10' 10" e	9' 2"	9' 11" e	9' 11" e	8' 8" e	9' 2" e	9' 2" e	8' 3" e	8' 7" e	8' 7" e	7' 10" e	7' 8" e	7' 8" e	7' 4" e
400S162-33	33	24	19' 10"	16' 7"	14' 6"	11' 5" e	11' 4" e	9' 6"	9' 11" e	9' 11" e	8' 8" e	8' 10" e	8' 10" e	8' 0" e	8' 1" e	8' 1" e	7' 7" e	7' 6" e	7' 6" e	7' 2" e	7' 0" e	7' 0" e	6' 10" e	6' 3" e	6' 3" e	6' 3" e
400S200-33	33	12	27' 9"	22' 0"	19' 3"	17' 0"	15' 0"	12' 8"	14' 9"	13' 8"	11' 6"	13' 2" e	12' 8"	10' 8"	12' 0" e	11' 11" e	10' 1"	11' 1" e	11' 1" e	9' 7" e	10' 5" e	10' 5" e	9' 2" e	9' 4" e	9' 4" e	8' 6" e
400S200-33	33	16	25' 2"	20' 0"	17' 6"	14' 9"	13' 8"	11' 6"	12' 9" e	12' 5" e	10' 5"	11' 5" e	11' 5" e	9' 8"	10' 5" e	10' 5" e	9' 2" e	9' 8" e	9' 8" e	8' 8" e	9' 0" e	9' 0" e	8' 4" e	8' 1" e	8' 1" e	7' 8" e
400S200-33	33	24	20' 10"	17' 6"	15' 3"	12' 0" e	11' 11" e	10' 1"	10' 5" e	10' 5" e	9' 2" e	9' 4" e	9' 4" e	8' 6" e	8' 6" e	8' 6" e	8' 0" e	7' 10" e	7' 10" e	7' 7" e	7' 4" e	7' 4" e	7' 3" e	6' 7" e	6' 7" e	6' 7" e
400S137-43	33	12	27' 4"	21' 8"	18' 11"	16' 11"	14' 9"	12' 6"	15' 4"	13' 5"	11' 4"	13' 9"	12' 6"	10' 6"	12' 7"	11' 9"	9' 11"	11' 7"	11' 2"	9' 5"	10' 10"	10' 8"	9' 0"	9' 9"	9' 9"	8' 4"
400S137-43	33	16	24' 10"	19' 8"	17' 2"	15' 4"	13' 5"	11' 4"	13' 4"	12' 2"	10' 4"	11' 11"	11' 4"	9' 7"	10' 10"	10' 8"	9' 0"	10' 1"	10' 1"	8' 6"	9' 5"	9' 5"	8' 2"	8' 5" e	8' 5" e	7' 7"
400S137-43	33	24	21' 8"	17' 2"	15' 0"	12' 7"	11' 9"	9' 11"	10' 10"	10' 8"	9' 0"	9' 9"	9' 9"	8' 4"	8' 11"	8' 11"	7' 10"	8' 3" e	8' 3" e	7' 6"	7' 8" e	7' 8" e	7' 2" e	6' 11" e	6' 11" e	6' 7" e
400S162-43	33	12	28' 7"	22' 8"	19' 10"	17' 9"	15' 6"	13' 1"	16' 1"	14' 1"	11' 10"	14' 10"	13' 1"	11' 0"	13' 6"	12' 3"	10' 4"	12' 6"	11' 8"	9' 10"	11' 9"	11' 2"	9' 5"	10' 6"	10' 4"	8' 9"
400S162-43	33	16	26' 0"	20' 7"	18' 0"	16' 1"	14' 1"	11' 10"	14' 4"	12' 9"	10' 9"	12' 10"	11' 10"	10' 0"	11' 9"	11' 2"	9' 5"	10' 10"	10' 7"	8' 11"	10' 2"	10' 2"	8' 7"	9' 1" e	9' 1" e	7' 11"
400S162-43	33	24	22' 8"	18' 0"	15' 9"	13' 6"	12' 3"	10' 4"	11' 9"	11' 2"	9' 5"	10' 6"	10' 4"	8' 9"	9' 7" e	9' 7" e	8' 3"	8' 10" e	8' 10" e	7' 10"	8' 3" e	8' 3" e	7' 6" e	7' 5" e	7' 5" e	6' 11" e
400S200-43	33	12	30' 2"	23' 11"	20' 11"	18' 8"	16' 4"	13' 9"	17' 0"	14' 10"	12' 6"	15' 9"	13' 9"	11' 7"	14' 6"	13' 0"	10' 11"	13' 5"	12' 4"	10' 5"	12' 7"	11' 9"	9' 11"	11' 3" e	10' 11"	9' 3"
400S200-43	33	16	27' 5"	21' 9"	19' 0"	17' 0"	14' 10"	12' 6"	15' 4"	13' 6"	11' 4"	13' 9"	12' 6"	10' 7"	12' 7"	11' 9"	9' 11"	11' 7"	11' 2"	9' 5"	10' 10" e	10' 8" e	9' 0"	9' 9" e	9' 9" e	8' 5" e
400S200-43	33	24	23' 11"	19' 0"	16' 7"	14' 6"	13' 0"	10' 11"	12' 7"	11' 9"	9' 11"	11' 3" e	10' 11"	9' 3"	10' 3" e	10' 3" e	8' 8"	9' 6" e	9' 6" e	8' 3" e	8' 10" e	8' 10" e	7' 11" e	7' 11" e	7' 11" e	7' 4" e
400S137-54	50	12	29' 3"	23' 2"	20' 3"	18' 1"	15' 10"	13' 4"	16' 6"	14' 5"	12' 2"	15' 3"	13' 4"	11' 3"	14' 5"	12' 7"	10' 7"	13' 8"	11' 11"	10' 1"	13' 1"	11' 5"	9' 8"	12' 2"	10' 7"	8' 11"
400S137-54	50	16	26' 7"	21' 1"	18' 5"	16' 6"	14' 5"	12' 2"	15' 0"	13' 1"	11' 0"	13' 11"	12' 2"	10' 3"	13' 1"	11' 5"	9' 8"	12' 5"	10' 10"	9' 2"	11' 10"	10' 4"	8' 9"	11' 0"	9' 8"	8' 1"
400S137-54	50	24	23' 2"	18' 5"	16' 1"	14' 5"	12' 7"	10' 7"	13' 1"	11' 5"	9' 8"	12' 2"	10' 7"	8' 11"	11' 5"	10' 0"	8' 5"	10' 10"	9' 6"	8' 0"	10' 4"	9' 1"	7' 8"	9' 3"	8' 5"	7' 1"
400S162-54	50	12	30' 8"	24' 4"	21' 3"	19' 0"	16' 7"	14' 0"	17' 3"	15' 1"	12' 9"	16' 0"	14' 0"	11' 10"	15' 1"	13' 2"	11' 1"	14' 4"	12' 6"	10' 7"	13' 8"	12' 0"	10' 1"	12' 9"	11' 1"	9' 4"
400S162-54	50	16	27' 10"	22' 1"	19' 4"	17' 3"	15' 1"	12' 9"	15' 8"	13' 8"	11' 7"	14' 7"	12' 9"	10' 9"	13' 8"	12' 0"	10' 1"	13' 0"	11' 4"	9' 7"	12' 5"	10' 10"	9' 2"	11' 7"	10' 1"	8' 6"
400S162-54	50	24	24' 4"	19' 4"	16' 10"	15' 1"	13' 2"	11' 1"	13' 8"	12' 0"	10' 1"	12' 9"	11' 1"	9' 4"	12' 0"	10' 5"	8' 10"	11' 4"	9' 11"	8' 5"	10' 10"	9' 6"	8' 0"	10' 0"	8' 10"	7' 5"
400S200-54	50	12	32' 4"	25' 8"	22' 5"	20' 1"	17' 6"	14' 9"	18' 3"	15' 11"	13' 5"	16' 11"	14' 9"	12' 6"	15' 11"	13' 11"	11' 9"	15' 1"	13' 3"	11' 2"	14' 6"	12' 8"	10' 8"	13' 5"	11' 9"	9' 11"
400S200-54	50	16	29' 5"	23' 4"	20' 5"	18' 3"	15' 11"	13' 5"	16' 7"	14' 6"	12' 2"	15' 4"	13' 5"	11' 4"	14' 6"	12' 8"	10' 8"	13' 9"	12' 0"	10' 1"	13' 2"	11' 6"	9' 8"	12' 2"	10' 8"	9' 0"
400S200-54	50	24	25' 8"	20' 5"	17' 10"	15' 11"	13' 11"	11' 9"	14' 6"	12' 8"	10' 8"	13' 5"	11' 9"	9' 11"	12' 8"	11' 0"	9' 4"	12' 0"	10' 6"	8' 10"	11' 6"	10' 0"	8' 5"	10' 6"	9' 4"	7' 10"
400S250-54	50	12	34' 1"	27' 1"	23' 8"	21' 2"	18' 6"	15' 7"	19' 2"	16' 9"	14' 2"	17' 10"	15' 7"	13' 2"	16' 9"	14' 8"	12' 4"	15' 11"	13' 11"	11' 9"	15' 3"	13' 4"	11' 3"	14' 2"	12' 4"	10' 5"
400S250-54	50	16	31' 0"	24' 7"	21' 6"	19' 2"	16' 9"	14' 2"	17' 5"	15' 3"	12' 10"	16' 2"	14' 2"	11' 11"	15' 3"	13' 4"	11' 3"	14' 6"	12' 8"	10' 8"	13' 10"	12' 1"	10' 2"	12' 10"	11' 3"	9' 6"
400S250-54	50	24	27' 1"	21' 6"	18' 9"	16' 9"	14' 8"	12' 4"	15' 3"	13' 4"	11' 3"	14' 2"	12' 4"	10' 5"	13' 4"	11' 8"	9' 10"	12' 8"	11' 1"	9' 4"	12' 0"	10' 7"	8' 11"	10' 9"	9' 10"	8' 3"

LIMITING WALL HEIGHTS - STRUCTURAL

	Fy	Spacing	5 psf			15 psf			20 psf			25 psf			30 psf			35 psf			40 psf			50 psf		
	(ksi)	(in) oc	L/120	L/240	L/360	L/240	L/360	L/600	L/240	L/360	L/600	L/240	L/360	L/600	L/240	L/360	L/600	L/240	L/360	L/600	L/240	L/360	L/600	L/240	L/360	L/600
400S300-54	50	12	35' 8"	28' 4"	24' 9"	22' 1"	19' 4"	16' 4"	20' 1"	17' 7"	14' 10"	18' 8"	16' 4"	13' 9"	17' 7"	15' 4"	12' 11"	16' 8"	14' 7"	12' 3"	15' 11"	13' 11"	11' 9"	14' 10"	12' 11"	10' 11"
400S300-54	50	16	32' 5"	25' 9"	22' 6"	20' 1"	17' 7"	14' 10"	18' 3"	15' 11"	13' 5"	16' 11"	14' 10"	12' 6"	15' 11"	13' 11"	11' 9"	15' 2"	13' 3"	11' 2"	14' 6"	12' 8"	10' 8"	13' 4"	11' 9"	9' 11"
400S300-54	50	24	28' 4"	22' 6"	19' 8"	17' 7"	15' 4"	12' 11"	15' 11"	13' 11"	11' 9"	14' 10"	12' 11"	10' 11"	13' 11"	12' 2"	10' 3"	13' 0"	11' 7"	9' 9"	12' 2"	11' 1"	9' 4"	10' 10"	10' 3"	8' 8"
400S137-68	50	12	31' 3"	24' 10"	21' 8"	19' 4"	16' 11"	14' 3"	17' 7"	15' 5"	13' 0"	16' 4"	14' 3"	12' 0"	15' 5"	13' 5"	11' 4"	14' 7"	12' 9"	10' 9"	14' 0"	12' 2"	10' 4"	13' 0"	11' 4"	9' 7"
400S137-68	50	16	28' 5"	22' 7"	19' 8"	17' 7"	15' 5"	13' 0"	16' 0"	14' 0"	11' 9"	14' 10"	13' 0"	10' 11"	14' 0"	12' 2"	10' 4"	13' 3"	11' 7"	9' 9"	12' 8"	11' 1"	9' 4"	11' 9"	10' 4"	8' 8"
400S137-68	50	24	24' 10"	19' 8"	17' 2"	15' 5"	13' 5"	11' 4"	14' 0"	12' 2"	10' 4"	13' 0"	11' 4"	9' 7"	12' 2"	10' 8"	9' 0"	11' 7"	10' 2"	8' 7"	11' 1"	9' 8"	8' 2"	10' 4"	9' 0"	7' 7"
400S162-68	50	12	32' 10"	26' 0"	22' 9"	20' 4"	17' 9"	15' 0"	18' 6"	16' 2"	13' 7"	17' 2"	15' 0"	12' 8"	16' 2"	14' 1"	11' 11"	15' 4"	13' 5"	11' 4"	14' 8"	12' 10"	10' 10"	13' 7"	11' 11"	10' 0"
400S162-68	50	16	29' 10"	23' 8"	20' 8"	18' 6"	16' 2"	13' 7"	16' 9"	14' 8"	12' 4"	15' 7"	13' 7"	11' 6"	14' 8"	12' 10"	10' 10"	13' 11"	12' 2"	10' 3"	13' 4"	11' 8"	9' 10"	12' 4"	10' 10"	9' 1"
400S162-68	50	24	26' 0"	20' 8"	18' 1"	16' 2"	14' 1"	11' 11"	14' 8"	12' 10"	10' 10"	13' 7"	11' 11"	10' 0"	12' 10"	11' 2"	9' 5"	12' 2"	10' 8"	9' 0"	11' 8"	10' 2"	8' 7"	10' 10"	9' 5"	8' 0"
400S200-68	50	12	34' 8"	27' 6"	24' 0"	21' 6"	18' 9"	15' 10"	19' 6"	17' 1"	14' 5"	18' 1"	15' 10"	13' 4"	17' 1"	14' 11"	12' 7"	16' 2"	14' 2"	11' 11"	15' 6"	13' 6"	11' 5"	14' 5"	12' 7"	10' 7"
400S200-68	50	16	31' 6"	25' 0"	21' 10"	19' 6"	17' 1"	14' 5"	17' 9"	15' 6"	13' 1"	16' 6"	14' 5"	12' 2"	15' 6"	13' 6"	11' 5"	14' 9"	12' 10"	10' 10"	14' 1"	12' 4"	10' 4"	13' 1"	11' 5"	9' 8"
400S200-68	50	24	27' 6"	21' 10"	19' 1"	17' 1"	14' 11"	12' 7"	15' 6"	13' 6"	11' 5"	14' 5"	12' 7"	10' 7"	13' 6"	11' 10"	10' 0"	12' 10"	11' 3"	9' 6"	12' 4"	10' 9"	9' 1"	11' 5"	10' 0"	8' 5"
400S250-68	50	12	36' 7"	29' 0"	25' 4"	22' 8"	19' 10"	16' 8"	20' 7"	18' 0"	15' 2"	19' 1"	16' 8"	14' 1"	18' 0"	15' 9"	13' 3"	17' 1"	14' 11"	12' 7"	16' 4"	14' 3"	12' 0"	15' 2"	13' 3"	11' 2"
400S250-68	50	16	33' 3"	26' 4"	23' 0"	20' 7"	18' 0"	15' 2"	18' 8"	16' 4"	13' 9"	17' 4"	15' 2"	12' 10"	16' 4"	14' 3"	12' 0"	15' 6"	13' 7"	11' 5"	14' 10"	13' 0"	10' 11"	13' 9"	12' 0"	10' 2"
400S250-68	50	24	29' 0"	23' 0"	20' 1"	18' 0"	15' 9"	13' 3"	16' 4"	14' 3"	12' 0"	15' 2"	13' 3"	11' 2"	14' 3"	12' 6"	10' 6"	13' 7"	11' 10"	10' 0"	13' 0"	11' 4"	9' 7"	12' 0"	10' 6"	8' 10"
400S300-68	50	12	38' 3"	30' 5"	26' 7"	23' 9"	20' 9"	17' 6"	21' 7"	18' 10"	15' 11"	20' 0"	17' 6"	14' 9"	18' 10"	16' 5"	13' 11"	17' 11"	15' 8"	13' 2"	17' 1"	14' 11"	12' 7"	15' 11"	13' 11"	11' 8"
400S300-68	50	16	34' 9"	27' 7"	24' 1"	21' 7"	18' 10"	15' 11"	19' 7"	17' 1"	14' 5"	18' 2"	15' 11"	13' 5"	17' 1"	14' 11"	12' 7"	16' 3"	14' 2"	12' 0"	15' 7"	13' 7"	11' 5"	14' 5"	12' 7"	10' 8"
400S300-68	50	24	30' 5"	24' 1"	21' 1"	18' 10"	16' 5"	13' 11"	17' 1"	14' 11"	12' 7"	15' 11"	13' 11"	11' 8"	14' 11"	13' 1"	11' 0"	14' 2"	12' 5"	10' 6"	13' 7"	11' 10"	10' 0"	12' 7"	11' 0"	9' 3"
400S250-97	50	12	40' 7"	32' 2"	28' 1"	25' 2"	21' 11"	18' 6"	22' 10"	19' 11"	16' 10"	21' 2"	18' 6"	15' 7"	19' 11"	17' 5"	14' 8"	18' 11"	16' 7"	14' 0"	18' 1"	15' 10"	13' 4"	16' 10"	14' 8"	12' 5"
400S250-97	50	16	36' 10"	29' 3"	25' 6"	22' 10"	19' 11"	16' 10"	20' 9"	18' 1"	15' 3"	19' 3"	16' 10"	14' 2"	18' 1"	15' 10"	13' 4"	17' 3"	15' 0"	12' 8"	16' 6"	14' 5"	12' 2"	15' 3"	13' 4"	11' 3"
400S250-97	50	24	32' 2"	25' 6"	22' 4"	19' 11"	17' 5"	14' 8"	18' 1"	15' 10"	13' 4"	16' 10"	14' 8"	12' 5"	15' 10"	13' 10"	11' 8"	15' 0"	13' 2"	11' 1"	14' 5"	12' 7"	10' 7"	13' 4"	11' 8"	9' 10"
400S300-97	50	12	42' 6"	33' 9"	29' 6"	26' 4"	23' 0"	19' 5"	23' 11"	20' 11"	17' 8"	22' 3"	19' 5"	16' 4"	20' 11"	18' 3"	15' 5"	19' 10"	17' 4"	14' 8"	19' 0"	16' 7"	14' 0"	17' 8"	15' 5"	13' 0"
400S300-97	50	16	38' 7"	30' 8"	26' 9"	23' 11"	20' 11"	17' 8"	21' 9"	19' 0"	16' 0"	20' 2"	17' 8"	14' 10"	19' 0"	16' 7"	14' 0"	18' 1"	15' 9"	13' 4"	17' 3"	15' 1"	12' 9"	16' 0"	14' 0"	11' 10"
400S300-97	50	24	33' 9"	26' 9"	23' 5"	20' 11"	18' 3"	15' 5"	19' 0"	16' 7"	14' 0"	17' 8"	15' 5"	13' 0"	16' 7"	14' 6"	12' 3"	15' 9"	13' 9"	11' 7"	15' 1"	13' 2"	11' 1"	14' 0"	12' 3"	10' 4"
550S137-33	33	12	31' 7"	25' 7"	22' 5"	18' 3"	17' 6"	14' 9"	15' 10" e	15' 10" e	13' 5"	14' 2" e	14' 2" e	12' 5" e	12' 11" e	12' 11" e	11' 8" e	11' 11" e	11' 11" e	11' 1" e	11' 2" e	11' 2" e	10' 8" e	10' 0" e	10' 0" e	9' 10" e
550S137-33	33	16	27' 4"	23' 3"	20' 4"	15' 10" e	15' 10" e	13' 5"	13' 8" e	13' 8" e	12' 2" e	12' 3" e	12' 3" e	11' 4" e	11' 2" e	11' 2" e	10' 8" e	10' 4" e	10' 4" e	10' 1" e	9' 8" e	9' 8" e	9' 8" e	8' 8" e	8' 8" e	8' 8" e
550S137-33	33	24	22' 4"	20' 4"	17' 9"	12' 11" e	12' 11" e	11' 8" e	11' 2" e	11' 2" e	10' 8" e	10' 0" e	10' 0" e	9' 10" e	9' 1" e	9' 1" e	9' 1" e	8' 5" e	8' 5" e	8' 5" e	7' 11" e	7' 11" e	7' 11" e	7' 1" e	7' 1" e	7' 1" e
550S162-33	33	12	33' 8"	26' 9"	23' 4"	19' 7"	18' 3"	15' 5"	16' 11" e	16' 7" e	14' 0"	15' 2" e	15' 2" e	13' 0" e	13' 10" e	13' 10" e	12' 3" e	12' 10" e	12' 10" e	11' 7" e	12' 0" e	12' 0" e	11' 1" e	10' 9" e	10' 9" e	10' 4" e
550S162-33	33	16	29' 4"	24' 4"	21' 3"	16' 11" e	16' 7" e	14' 0"	14' 8" e	14' 8" e	12' 8" e	13' 2" e	13' 2" e	11' 9" e	12' 0" e	12' 0" e	11' 1" e	11' 1" e	11' 1" e	10' 6" e	10' 5" e	10' 5" e	10' 1" e	9' 3" e	9' 3" e	9' 3" e
550S162-33	33	24	24' 0"	21' 3"	18' 6"	13' 10" e	13' 10" e	12' 3" e	12' 0" e	12' 0" e	11' 1" e	10' 9" e	10' 9" e	10' 4" e	9' 9" e	9' 9" e	9' 8" e	9' 1" e	9' 1" e	9' 1" e	8' 6" e	8' 6" e	8' 6" e	7' 7" e	7' 7" e	7' 7" e
550S200-33	33	12	35' 5"	28' 1"	24' 7"	20' 10" e	19' 2"	16' 2"	18' 1" e	17' 5" e	14' 8"	16' 2" e	16' 2" e	13' 8" e	14' 9" e	14' 9" e	12' 10" e	13' 8" e	13' 8" e	12' 2" e	12' 9" e	12' 9" e	11' 8" e	11' 5" e	11' 5" e	10' 10" e
550S200-33	33	16	31' 4"	25' 6"	22' 4"	18' 1" e	17' 5" e	14' 8"	15' 8" e	15' 8" e	13' 4" e	14' 0" e	14' 0" e	12' 5" e	12' 9" e	12' 9" e	11' 8" e	11' 10" e	11' 10" e	11' 1" e	11' 1" e	11' 1" e	10' 7" e	9' 11" e	9' 11" e	9' 10" e
550S200-33	33	24	25' 7"	22' 4"	19' 6"	14' 9" e	14' 9" e	12' 10" e	12' 9" e	12' 9" e	11' 8" e	11' 5" e	11' 5" e	10' 10" e	10' 5" e	10' 5" e	10' 2" e	9' 8" e	9' 8" e	9' 8" e	9' 0" e	9' 0" e	9' 0" e	8' 1" e	8' 1" e	8' 1" e
550S137-43	33	12	35' 2"	27' 11"	24' 4"	21' 9"	19' 0"	16' 1"	19' 8"	17' 3"	14' 7"	17' 7"	16' 1"	13' 6"	16' 1"	15' 1"	12' 9"	14' 10"	14' 4"	12' 1"	13' 11" e	13' 9" e	11' 7"	12' 5" e	12' 5" e	10' 9" e
550S137-43	33	16	31' 11"	25' 4"	22' 2"	19' 8"	17' 3"	14' 7"	17' 0"	15' 8"	13' 3"	15' 3"	14' 7"	12' 4"	13' 11" e	13' 9" e	11' 7"	12' 10" e	12' 10" e	11' 0"	12' 0" e	12' 0" e	10' 6" e	10' 9" e	10' 9" e	9' 9" e
550S137-43	33	24	27' 10"	22' 2"	19' 4"	16' 1"	15' 1"	12' 9"	13' 11" e	13' 9" e	11' 7"	12' 5" e	12' 5" e	10' 9" e	11' 4" e	11' 4" e	10' 1" e	10' 6" e	10' 6" e	9' 7" e	9' 10" e	9' 10" e	9' 2" e	8' 10" e	8' 10" e	8' 6" e
550S162-43	33	12	36' 8"	29' 1"	25' 5"	22' 9"	19' 10"	16' 9"	20' 8"	18' 1"	15' 3"	18' 9"	16' 9"	14' 2"	17' 1"	15' 9"	13' 4"	15' 10" e	15' 0"	12' 8"	14' 10" e	14' 4" e	12' 1"	13' 3" e	13' 3" e	11' 3" e
550S162-43	33	16	33' 4"	26' 5"	23' 1"	20' 8"	18' 1"	15' 3"	18' 1"	16' 5"	13' 10"	16' 3" e	15' 3"	12' 10"	14' 10" e	14' 4" e	12' 1"	13' 8" e	13' 7" e	11' 6" e	12' 10" e	12' 10" e	11' 0" e	11' 6" e	11' 6" e	10' 2" e
550S162-43	33	24	29' 1"	23' 1"	20' 2"	17' 1"	15' 9"	13' 4"	14' 10" e	14' 4" e	12' 1"	13' 3" e	13' 3" e	11' 3" e	12' 1" e	12' 1" e	10' 7" e	11' 2" e	11' 2" e	10' 0" e	10' 6" e	10' 6" e	9' 7" e	9' 4" e	9' 4" e	8' 11" e
550S200-43	33	12	38' 7"	30' 7"	26' 9"	23' 11"	20' 11"	17' 7"	21' 7"	19' 0"	16' 0"	19' 4"	17' 7"	14' 10"	17' 7" e	16' 7"	14' 0"	16' 4" e	15' 9" e	13' 3"	15' 3" e	15' 1" e	12' 8"	13' 8" e	13' 8" e	11' 10" e
550S200-43	33	16	35' 1"	27' 10"	24' 4"	21' 7"	19' 0"	16' 0"	18' 8"	17' 3"	14' 6"	16' 9" e	16' 0" e	13' 6"	15' 3" e	15' 1" e	12' 8"	14' 1" e	14' 1" e	12' 1" e	13' 3" e	13' 3" e	11' 6" e	11' 10" e	11' 10" e	10' 9" e
550S200-43	33	24	30' 6"	24' 4"	21' 3"	17' 7" e	16' 7"	14' 0"	15' 3" e	15' 1" e	12' 8"	13' 8" e	13' 8" e	11' 10" e	12' 5" e	12' 5" e	11' 1" e	11' 6" e	11' 6" e	10' 6" e	10' 9" e	10' 9" e	10' 1" e	9' 8" e	9' 8" e	9' 4" e
550S137-54	50	12	37' 8"	29' 11"	26' 1"	23' 4"	20' 5"	17' 2"	21' 3"	18' 6"	15' 8"	19' 8"	17' 2"	14' 6"	18' 6"	16' 2"	13' 8"	17' 7"	15' 5"	13' 0"	16' 10"	14' 9"	12' 5"	15' 8"	13' 8"	11' 6"
550S137-54	50	16	34' 3"	27' 2"	23' 9"	21' 3"	18' 6"	15' 8"	19' 3"	16' 10"	14' 2"	17' 11"	15' 8"	13' 2"	16' 10"	14' 9"	12' 5"	16' 0"	14' 0"	11' 9"	15' 4"	13' 4"	11' 3"	14' 2"	12' 5"	10' 6"
550S137-54	50	24	29' 11"	23' 9"	20' 9"	18' 6"	16' 2"	13' 8"	16' 10"	14' 9"	12' 5"	15' 8"	13' 8"	11' 6"	14' 9"	12' 10"	10' 10"	14' 0"	12' 2"	10' 4"	13' 2"	11' 8"	9' 10"	11' 10"	10' 10"	9' 2"
550S162-54	50	12	39' 4"	31' 3"	27' 3"	24' 5"	21' 4"	18' 0"	22' 2"	19' 4"	16' 4"	20' 7"	18' 0"	15' 2"	19' 4"	16' 11"	14' 3"	18' 5"	16' 1"	13' 7"	17' 7"	15' 4"	13' 0"	16' 4"	14' 3"	12' 0"
550S162-54	50	16	35' 9"	28' 5"	24' 9"	22' 2"	19' 4"	16' 4"	20' 2"	17' 7"	14' 10"	18' 8"	16' 4"	13' 9"	17' 7"	15' 4"	13' 0"	16' 8"	14' 7"	12' 4"	16' 0"	14' 0"	11' 9"	14' 10"	13' 0"	10' 11"
550S162-54	50	24	31' 3"	24' 9"	21' 8"	19' 4"	16' 11"	14' 3"	17' 7"	15' 4"	13' 0"	16' 4"	14' 3"	12' 0"	15' 4"	13' 5"	11' 4"	14' 7"	12' 9"	10' 9"	14' 0"	12' 2"	10' 3"	12' 6" e	11' 4"	9' 7"
550S200-54	50	12	41' 5"	32' 10"	28' 8"	25' 8"	22' 5"	18' 11"	23' 4"	20' 4"	17' 2"	21' 8"	18' 11"	15' 11"	20' 4"	17' 10"	15' 0"	19' 4"	16' 11"	14' 3"	18' 6"	16' 2"	13' 8"	17' 2"	15' 0"	12' 8"
550S200-54	50	16	37' 7"	29' 10"	26' 1"	23' 4"	20' 4"	17' 2"	21' 2"	18' 6"	15' 7"	19' 8"	17' 2"	14' 6"	18' 6"	16' 2"	13' 8"	17' 7"	15' 4"	12' 11"	16' 10"	14' 8"	12' 5"	15' 7"	13' 8"	11' 6"
550S200-54	50	24	32' 10"	26' 1"	22' 9"	20' 4"	17' 10"	15' 0"	18' 6"	16' 2"	13' 8"	17' 2"	15' 0"	12' 8"	16' 2"	14' 1"	11' 11"	15' 4"	13' 5"	11' 4"	14' 5"	12' 10"	10' 10"	12' 10" e	11' 11"	10' 1"
550S250-54	50	12	43' 5"	34' 6"	30' 1"	26' 11"	23' 6"	19' 10"	24' 6"	21' 4"	18' 0"	22' 8"	19' 10"	16' 9"	21' 4"	18' 8"	15' 9"	20' 4"	17' 9"	14' 11"	19' 5"	17' 0"	14' 4"	18' 0"	15' 9"	13' 3"
550S250-54	50	16	39' 6"	31' 4"	27' 4"	24' 6"	21' 4"	18' 0"	22' 3"	19' 5"	16' 5"	20' 8"	18' 0"	15' 2"	19' 5"	17' 0"	14' 4"	18' 5"	16' 1"	13' 7"	17' 8"	15' 5"	13' 0"	16' 2"	14' 4"	12' 1"
550S250-54	50	24	34' 6"	27' 4"	23' 11"	21' 4"	18' 8"	15' 9"	19' 5"	17' 0"	14' 4"	18' 0"	15' 9"	13' 3"	17' 0"	14' 10"	12' 6"	15' 9"	14' 1"	11' 10"	14' 9"	13' 6"	11' 4"	13' 2" e	12' 6" e	10' 6"
550S300-54	50	12	45' 4"	35' 11"	31' 5"	28' 1"	24' 6"	20' 8"	25' 6"	22' 3"	18' 10"	23' 8"	20' 8"	17' 5"	22' 3"	19' 6"	16' 5"	21' 2"	18' 6"	15' 7"	20' 3"	17' 8"	14' 11"	18' 10"	16' 5"	13' 10"
550S300-54	50	16	41' 2"	32' 8"	28' 6"	25' 6"	22' 3"	18' 10"	23' 2"	20' 3"	17' 1"	21' 6"	18' 10"	15' 10"	20' 3"	17' 8"	14' 11"	19' 3"	16' 10"	14' 2"	18' 4"	16' 1"	13' 7"	16' 5"	14' 11"	12' 7"
550S300-54	50	24	35' 11"	28' 6"	24' 11"	22' 3"	19' 6"	16' 5"	20' 3"	17' 8"	14' 11"	18' 10"	16' 5"	13' 10"	17' 4"	15' 5"	13' 0"	16' 0"	14' 8"	12' 5"	15' 0"	14' 0"	11' 10"	13' 5" e	13' 0" e	11' 0"
550S137-68	50	12	40' 4"	32' 0"	28' 0"	25' 0"	21' 10"	18' 5"	22' 9"	19' 10"	16' 9"	21' 1"	18' 5"	15' 6"	19' 10"	17' 4"	14' 7"	18' 10"	16' 6"	13' 11"	18' 0"	15' 9"	13' 3"	16' 9"	14' 7"	12' 4"
550S137-68	50	16	36' 8"	29' 1"	25' 5"	22' 9"	19' 10"	16' 9"	20' 8"	18' 0"	15' 2"	19' 2"	16' 9"	14' 1"	18' 0"	15' 9"	13' 3"	17' 2"	15' 0"	12' 7"	16' 5"	14' 4"	12' 1"	15' 2"	13' 3"	11' 2"
550S137-68	50	24	32' 0"	25' 5"	22' 2"	19' 10"	17' 4"	14' 7"	18' 0"	15' 9"	13' 3"	16' 9"	14' 7"	12' 4"	15' 9"	13' 9"	11' 7"	15' 0"	13' 1"	11' 0"	14' 4"	12' 6"	10' 7"	13' 3"	11' 7"	9' 9"
550S162-68	50	12	42' 2"	33' 6"	29' 3"	26' 2"	22' 10"	19' 3"	23' 9"	20' 9"	17' 6"	22' 1"	19' 3"	16' 3"	20' 9"	18' 2"	15' 3"	19' 9"	17' 3"	14' 6"	18' 10"	16' 6"	13' 11"	17' 6"	15' 3"	12' 11"
550S162-68	50	16	38' 4"	30' 5"	26' 7"	23' 9"	20' 9"	17' 6"	21' 7"	18' 10"	15' 11"	20' 0"	17' 6"	14' 9"	18' 10"	16' 6"	13' 11"	17' 11"	15' 8"	13' 2"	17' 2"	15' 0"	12' 7"	15' 11"	13' 11"	11' 9"
550S162-68	50	24	33' 6"	26' 7"	23' 3"	20' 9"	18' 2"	15' 3"	18' 10"	16' 6"	13' 11"	17' 6"	15' 3"	12' 11"	16' 6"	14' 5"	12' 2"	15' 8"	13' 8"	11' 6"	15' 0"	13' 1"	11' 0"	13' 11"	12' 2"	10' 3"
550S200-68	50	12	44' 5"	35' 3"	30' 10"	27' 6"	24' 1"	20' 3"	25' 0"	21' 10"	18' 5"	23' 3"	20' 3"	17' 1"	21' 10"	19' 1"	16' 1"	20' 9"	18' 2"	15' 3"	19' 10"	17' 4"	14' 8"	18' 5"	16' 1"	13' 7"
550S200-68	50	16	40' 4"	32' 0"	28' 0"	25' 0"	21' 10"	18' 5"	22' 9"	19' 10"	16' 9"	21' 1"	18' 5"	15' 7"	19' 10"	17' 4"	14' 8"	18' 10"	16' 6"	13' 11"	18' 0"	15' 9"	13' 3"	16' 9"	14' 8"	12' 4"
550S200-68	50	24	35' 3"	28' 0"	24' 5"	21' 10"	19' 1"	16' 1"	19' 10"	17' 4"	14' 8"	18' 5"	16' 1"	13' 7"	17' 4"	15' 2"	12' 9"	16' 6"	14' 5"	12' 2"	15' 9"	13' 9"	11' 7"	14' 8"	12' 9"	10' 9"
550S250-68	50	12	46' 8"	37' 0"	32' 4"	28' 11"	25' 3"	21' 4"	26' 3"	22' 11"	19' 4"	24' 4"	21' 4"	18' 0"	22' 11"	20' 0"	16' 11"	21' 9"	19' 0"	16' 1"	20' 10"	18' 2"	15' 4"	19' 4"	16' 11"	14' 3"
550S250-68	50	16	42' 4"	33' 7"	29' 4"	26' 3"	22' 11"	19' 4"	23' 10"	20' 10"	17' 7"	22' 2"	19' 4"	16' 4"	20' 10"	18' 2"	15' 4"	19' 10"	17' 4"	14' 7"	18' 11"	16' 6"	13' 11"	17' 7"	15' 4"	12' 11"
550S250-68	50	24	37' 0"	29' 4"	25' 8"	22' 11"	20' 0"	16' 11"	20' 10"	18' 2"	15' 4"	19' 4"	16' 11"	14' 3"	18' 2"	15' 11"	13' 5"	17' 4"	15' 1"	12' 9"	16' 6"	14' 5"	12' 2"	15' 4"	13' 5"	11' 4"
550S300-68	50	12	48' 8"	38' 7"	33' 9"	30' 2"	26' 4"	22' 3"	27' 5"	23' 11"	20' 2"	25' 5"	22' 3"	18' 9"	23' 11"	20' 11"	17' 8"	22' 9"	19' 10"	16' 9"	21' 9"	19' 0"	16' 0"	20' 2"	17' 8"	14' 10"
550S300-68	50	16	44' 2"	35' 1"	30' 8"	27' 5"	23' 11"	20' 2"	24' 11"	21' 9"	18' 4"	23' 1"	20' 2"	17' 0"	21' 9"	19' 0"	16' 0"	20' 8"	18' 1"	15' 3"	19' 9"	17' 3"	14' 7"	18' 4"	16' 0"	13' 6"
550S300-68	50	24	38' 7"	30' 8"	26' 9"	23' 11"	20' 11"	17' 8"	21' 9"	19' 0"	16' 0"	20' 2"	17' 8"	14' 10"	19' 0"	16' 7"	14' 0"	18' 1"	15' 9"	13' 4"	17' 3"	15' 1"	12' 9"	15' 8"	14' 0"	11' 10"
550S250-97	50	12	51' 10"	41' 1"	35' 11"	32' 1"	28' 1"	23' 8"	29' 2"	25' 6"	21' 6"	27' 1"	23' 8"	19' 11"	25' 6"	22' 3"	18' 9"	24' 3"	21' 2"	17' 10"	23' 2"	20' 3"	17' 1"	21' 6"	18' 9"	15' 10"
550S250-97	50	16	47' 1"	37' 4"	32' 8"	29' 2"	25' 6"	21' 6"	26' 6"	23' 2"	19' 6"	24' 7"	21' 6"	18' 2"	23' 2"	20' 3"	17' 1"	22' 0"	19' 3"	16' 2"	21' 0"	18' 5"	15' 6"	19' 6"	17' 1"	14' 5"
550S250-97	50	24	41' 1"	32' 8"	28' 6"	25' 6"	22' 3"	18' 9"	23' 2"	20' 3"	17' 1"	21' 6"	18' 9"	15' 10"	20' 3"	17' 8"	14' 11"	19' 3"	16' 9"	14' 2"	18' 5"	16' 1"	13' 7"	17' 1"	14' 11"	12' 7"
550S300-97	50	12	54' 1"	42' 11"	37' 6"	33' 7"	29' 4"	24' 9"	30' 6"	26' 7"	22' 5"	28' 4"	24' 9"	20' 10"	26' 7"	23' 3"	19' 7"	25' 3"	22' 1"	18' 8"	24' 2"	21' 2"	17' 10"	22' 5"	19' 7"	16' 7"
550S300-97	50	16	49' 2"	39' 0"	34' 1"	30' 6"	26' 7"	22' 5"	27' 8"	24' 2"	20' 5"	25' 8"	22' 5"	18' 11"	24' 2"	21' 2"	17' 10"	23' 0"	20' 1"	16' 11"	22' 0"	19' 2"	16' 2"	20' 5"	17' 10"	15' 0"
550S300-97	50	24	42' 11"	34' 1"	29' 9"	26' 7"	23' 3"	19' 7"	24' 2"	21' 2"	17' 10"	22' 5"	19' 7"	16' 7"	21' 2"	18' 6"	15' 7"	20' 1"	17' 6"	14' 9"	19' 2"	16' 9"	14' 2"	17' 10"	15' 7"	13' 2"
600S137-33	33	12	33' 0"	27' 6"	24' 0"	19' 1"	18' 9"	15' 10"	16' 6" e	16' 6" e	14' 4"	14' 9" e	14' 9" e	13' 4" e	13' 6" e	13' 6" e	12' 7" e	12' 6" e	12' 6" e	11' 11" e	11' 8" e	11' 8" e	11' 5" e	10' 5" e	10' 5" e	10' 5" e
600S137-33	33	16	28' 7"	24' 11"	21' 10"	16' 6" e	16' 6" e	14' 4"	14' 4" e	14' 4" e	13' 1" e	12' 10" e	12' 10" e	12' 1" e	11' 8" e	11' 8" e	11' 5" e	10' 10" e	10' 10" e	10' 10" e	10' 1" e	10' 1" e	10' 1" e	9' 1" e	9' 1" e	9' 1" e
600S137-33	33	24	23' 4"	21' 9"	19' 1"	13' 6" e	13' 6" e	12' 7" e	11' 8" e	11' 8" e	11' 5" e	10' 5" e	10' 5" e	10' 5" e	9' 6" e	9' 6" e	9' 6" e	8' 10" e	8' 10" e	8' 10" e	8' 3" e	8' 3" e	8' 3" e	7' 5" e	7' 5" e	7' 5" e
600S162-33	33	12	35' 6"	28' 8"	25' 0"	20' 6" e	19' 6"	16' 6"	17' 9" e	17' 9" e	15' 0"	15' 11" e	15' 11" e	13' 11" e	14' 6" e	14' 6" e	13' 1" e	13' 5" e	13' 5" e	12' 5" e	12' 7" e	12' 7" e	11' 11" e	11' 3" e	11' 3" e	11' 0" e
600S162-33	33	16	30' 9"	26' 0"	22' 9"	17' 9" e	17' 9" e	15' 0"	15' 5" e	15' 5" e	13' 7" e	13' 9" e	13' 9" e	12' 8" e	12' 7" e	12' 7" e	11' 11" e	11' 8" e	11' 8" e	11' 3" e	10' 11" e	10' 11" e	10' 10" e	9' 9" e	9' 9" e	9' 9" e
600S162-33	33	24	25' 1"	22' 9"	19' 10"	14' 6" e	14' 6" e	13' 1" e	12' 7" e	12' 7" e	11' 11" e	11' 3" e	11' 3" e	11' 0" e	10' 3" e	10' 3" e	10' 3" e	9' 6" e	9' 6" e	9' 6" e	8' 11" e	8' 11" e	8' 11" e	7' 11" e	7' 11" e	7' 11" e
600S200-33	33	12	37' 11"	30' 1"	26' 3"	21' 10" e	20' 6" e	17' 4"	18' 11" e	18' 8" e	15' 9" e	16' 11" e	16' 11" e	14' 7" e	15' 6" e	15' 6" e	13' 9" e	14' 4" e	14' 4" e	13' 1" e	13' 5" e	13' 5" e	12' 6" e	12' 0" e	12' 0" e	11' 7" e
600S200-33	33	16	32' 10"	27' 4"	23' 10"	18' 11" e	18' 8" e	15' 9" e	16' 5" e	16' 5" e	14' 3" e	14' 8" e	14' 8" e	13' 3" e	13' 5" e	13' 5" e	12' 6" e	12' 5" e	12' 5" e	11' 10" e	11' 7" e	11' 7" e	11' 4" e	10' 4" e	10' 4" e	10' 4" e
600S200-33	33	24	26' 9"	23' 10"	20' 10"	15' 6" e	15' 6" e	13' 9" e	13' 5" e	13' 5" e	12' 6" e	12' 0" e	12' 0" e	11' 7" e	10' 11" e	10' 11" e	10' 11" e	10' 1" e	10' 1" e	10' 1" e	9' 6" e	9' 6" e	9' 6" e	8' 6" e	8' 6" e	8' 6" e
600S137-43	33	12	37' 8"	29' 11"	26' 2"	22' 11"	20' 5"	17' 3"	19' 10"	18' 6"	15' 8"	17' 9"	17' 3"	14' 6"	16' 2"	16' 2"	13' 8"	15' 0" e	15' 0" e	13' 0"	14' 0" e	14' 0" e	12' 5"	12' 7" e	12' 7" e	11' 6" e
600S137-43	33	16	34' 3"	27' 2"	23' 9"	19' 10"	18' 6"	15' 8"	17' 2"	16' 10"	14' 2"	15' 5"	15' 5"	13' 2"	14' 0" e	14' 0" e	12' 5"	13' 0" e	13' 0" e	11' 9" e	12' 2" e	12' 2" e	11' 3" e	10' 10" e	10' 10" e	10' 6" e
600S137-43	33	24	28' 1"	23' 9"	20' 9"	16' 2"	16' 2"	13' 8"	14' 0" e	14' 0" e	12' 5"	12' 7" e	12' 7" e	11' 6" e	11' 6" e	11' 6" e	10' 10" e	10' 7" e	10' 7" e	10' 4" e	9' 11" e	9' 11" e	9' 10" e	8' 11" e	8' 11" e	8' 11" e
600S162-43	33	12	39' 4"	31' 2"	27' 3"	24' 4"	21' 3"	17' 11"	21' 11"	19' 4"	16' 4"	19' 8"	17' 11"	15' 2"	17' 11" e	16' 11"	14' 3"	16' 7" e	16' 1" e	13' 6"	15' 6" e	15' 4" e	12' 11"	13' 11" e	13' 11" e	12' 0" e
600S162-43	33	16	35' 9"	28' 4"	24' 9"	21' 11"	19' 4"	16' 4"	19' 0"	17' 7"	14' 10"	17' 0" e	16' 4" e	13' 9"	15' 6" e	15' 4" e	12' 11"	14' 4" e	14' 4" e	12' 4" e	13' 5" e	13' 5" e	11' 9" e	12' 0" e	12' 0" e	10' 11" e
600S162-43	33	24	31' 1"	24' 9"	21' 8"	17' 11" e	16' 11"	14' 3"	15' 6" e	15' 4" e	12' 11"	13' 11" e	13' 11" e	12' 0" e	12' 8" e	12' 8" e	11' 4" e	11' 9" e	11' 9" e	10' 9" e	11' 0" e	11' 0" e	10' 3" e	9' 10" e	9' 10" e	9' 6" e
600S200-43	33	12	41' 3"	32' 9"	28' 7"	25' 7"	22' 4"	18' 10"	22' 8"	20' 4"	17' 2"	20' 3"	18' 10"	15' 11"	18' 6" e	17' 9" e	15' 0"	17' 1" e	16' 10" e	14' 3"	16' 0" e	16' 0" e	13' 7" e	14' 4" e	14' 4" e	12' 7" e
600S200-43	33	16	37' 6"	29' 9"	26' 0"	22' 8"	20' 4"	17' 2"	19' 7" e	18' 5"	15' 7"	17' 7" e	17' 2" e	14' 5"	16' 0" e	16' 0" e	13' 7" e	14' 10" e	14' 10" e	12' 11" e	13' 10" e	13' 10" e	12' 4" e	12' 5" e	12' 5" e	11' 6" e
600S200-43	33	24	32' 0"	26' 0"	22' 9"	18' 6" e	17' 9" e	15' 0"	16' 0" e	16' 0" e	13' 7" e	14' 4" e	14' 4" e	12' 7" e	13' 1" e	13' 1" e	11' 11" e	12' 1" e	12' 1" e	11' 3" e	11' 4" e	11' 4" e	10' 9" e	10' 2" e	10' 2" e	10' 0" e
600S137-54	50	12	40' 5"	32' 1"	28' 0"	25' 1"	21' 11"	18' 5"	22' 9"	19' 11"	16' 9"	21' 2"	18' 5"	15' 7"	19' 11"	17' 4"	14' 8"	18' 11"	16' 6"	13' 11"	18' 1"	15' 9"	13' 4"	16' 9"	14' 8"	12' 4"
600S137-54	50	16	36' 9"	29' 2"	25' 6"	22' 9"	19' 11"	16' 9"	20' 8"	18' 1"	15' 3"	19' 2"	16' 9"	14' 2"	18' 1"	15' 9"	13' 4"	17' 2"	15' 0"	12' 8"	16' 4"	14' 4"	12' 1"	14' 7"	13' 4"	11' 3"
600S137-54	50	24	32' 1"	25' 6"	22' 3"	19' 11"	17' 4"	14' 8"	18' 1"	15' 9"	13' 4"	16' 9"	14' 8"	12' 4"	15' 4"	13' 9"	11' 8"	14' 3"	13' 1"	11' 1"	13' 4"	12' 6"	10' 7"	11' 11"	11' 8"	9' 10"
600S162-54	50	12	42' 2"	33' 6"	29' 3"	26' 2"	22' 10"	19' 3"	23' 9"	20' 9"	17' 6"	22' 1"	19' 3"	16' 3"	20' 9"	18' 1"	15' 3"	19' 8"	17' 3"	14' 6"	18' 10"	16' 6"	13' 11"	17' 6"	15' 3"	12' 11"
600S162-54	50	16	38' 4"	30' 5"	26' 7"	23' 9"	20' 9"	17' 6"	21' 7"	18' 10"	15' 11"	20' 0"	17' 6"	14' 9"	18' 10"	16' 6"	13' 11"	17' 11"	15' 8"	13' 2"	17' 2"	15' 0"	12' 7"	15' 11"	13' 11"	11' 9"
600S162-54	50	24	33' 6"	26' 7"	23' 3"	20' 9"	18' 1"	15' 3"	18' 10"	16' 6"	13' 11"	17' 6"	15' 3"	12' 11"	16' 6"	14' 5"	12' 2"	15' 8"	13' 8"	11' 6"	14' 8"	13' 1"	11' 0"	13' 2" e	12' 2" e	10' 3"
600S200-54	50	12	44' 4"	35' 2"	30' 9"	27' 6"	24' 0"	20' 3"	24' 11"	21' 10"	18' 5"	23' 2"	20' 3"	17' 1"	21' 10"	19' 1"	16' 1"	20' 9"	18' 1"	15' 3"	19' 10"	17' 4"	14' 7"	18' 5"	16' 1"	13' 7"
600S200-54	50	16	40' 3"	32' 0"	27' 11"	24' 11"	21' 10"	18' 5"	22' 8"	19' 10"	16' 8"	21' 1"	18' 5"	15' 6"	19' 10"	17' 4"	14' 7"	18' 10"	16' 5"	13' 10"	18' 0"	15' 9"	13' 3"	16' 7"	14' 7"	12' 4"
600S200-54	50	24	35' 2"	27' 11"	24' 5"	21' 10"	19' 1"	16' 1"	19' 10"	17' 4"	14' 7"	18' 5"	16' 1"	13' 7"	17' 4"	15' 1"	12' 9"	16' 2"	14' 4"	12' 1"	15' 1" e	13' 9"	11' 7"	13' 6" e	12' 9" e	10' 9"
600S250-54	50	12	46' 5"	36' 10"	32' 2"	28' 9"	25' 2"	21' 2"	26' 2"	22' 10"	19' 3"	24' 3"	21' 2"	17' 11"	22' 10"	19' 11"	16' 10"	21' 8"	18' 11"	16' 0"	20' 9"	18' 2"	15' 4"	19' 3"	16' 10"	14' 2"
600S250-54	50	16	42' 2"	33' 6"	29' 3"	26' 2"	22' 10"	19' 3"	23' 9"	20' 9"	17' 6"	22' 1"	19' 3"	16' 3"	20' 9"	18' 2"	15' 4"	19' 9"	17' 3"	14' 6"	18' 10"	16' 6"	13' 11"	16' 11"	15' 4"	12' 11"
600S250-54	50	24	36' 10"	29' 3"	25' 7"	22' 10"	19' 11"	16' 10"	20' 9"	18' 2"	15' 4"	19' 3"	16' 10"	14' 2"	17' 10"	15' 10"	13' 4"	16' 6"	15' 1"	12' 8"	15' 6" e	14' 5"	12' 2"	13' 10" e	13' 4" e	11' 3"
600S300-54	50	12	48' 5"	38' 5"	33' 7"	30' 0"	26' 2"	22' 1"	27' 3"	23' 10"	20' 1"	25' 4"	22' 1"	18' 8"	23' 10"	20' 10"	17' 6"	22' 7"	19' 9"	16' 8"	21' 7"	18' 11"	15' 11"	19' 10"	17' 6"	14' 9"
600S300-54	50	16	43' 11"	34' 11"	30' 6"	27' 3"	23' 10"	20' 1"	24' 9"	21' 7"	18' 3"	23' 0"	20' 1"	16' 11"	21' 7"	18' 11"	15' 11"	20' 6"	17' 11"	15' 2"	19' 3"	17' 2"	14' 6"	17' 3"	15' 11"	13' 5"
600S300-54	50	24	38' 4"	30' 6"	26' 8"	23' 10"	20' 10"	17' 6"	21' 7"	18' 11"	15' 11"	19' 10"	17' 6"	14' 9"	18' 2"	16' 6"	13' 11"	16' 10"	15' 8"	13' 3"	15' 9" e	15' 0" e	12' 8"	14' 1" e	13' 11" e	11' 9"
600S137-68	50	12	43' 4"	34' 4"	30' 0"	26' 10"	23' 5"	19' 9"	24' 5"	21' 4"	18' 0"	22' 8"	19' 9"	16' 8"	21' 4"	18' 7"	15' 8"	20' 3"	17' 8"	14' 11"	19' 4"	16' 11"	14' 3"	18' 0"	15' 8"	13' 3"
600S137-68	50	16	39' 4"	31' 3"	27' 3"	24' 5"	21' 4"	18' 0"	22' 2"	19' 4"	16' 4"	20' 7"	18' 0"	15' 2"	19' 4"	16' 11"	14' 3"	18' 5"	16' 1"	13' 7"	17' 7"	15' 4"	12' 11"	16' 4"	14' 3"	12' 0"
600S137-68	50	24	34' 4"	27' 3"	23' 10"	21' 4"	18' 7"	15' 8"	19' 4"	16' 11"	14' 3"	18' 0"	15' 8"	13' 3"	16' 11"	14' 9"	12' 5"	16' 1"	14' 0"	11' 10"	15' 4"	13' 5"	11' 4"	13' 11"	12' 5"	10' 6"

LIMITING WALL HEIGHTS - STRUCTURAL

	Fy (ksi)	Spacing (in) oc	5 psf			15 psf			20 psf			25 psf			30 psf			35 psf			40 psf			50 psf		
			L/120	L/240	L/360	L/240	L/360	L/600	L/240	L/360	L/600	L/240	L/360	L/600	L/240	L/360	L/600	L/240	L/360	L/600	L/240	L/360	L/600	L/240	L/360	L/600
600S162-68	50	12	45' 3"	35' 11"	31' 4"	28' 0"	24' 6"	20' 8"	25' 6"	22' 3"	18' 9"	23' 8"	20' 8"	17' 5"	22' 3"	19' 5"	16' 5"	21' 2"	18' 5"	15' 7"	20' 2"	17' 8"	14' 11"	18' 9"	16' 5"	13' 10"
600S162-68	50	16	41' 1"	32' 7"	28' 6"	25' 6"	22' 3"	18' 9"	23' 2"	20' 2"	17' 1"	21' 6"	18' 9"	15' 10"	20' 2"	17' 8"	14' 11"	19' 2"	16' 9"	14' 2"	18' 4"	16' 0"	13' 6"	17' 1"	14' 11"	12' 7"
600S162-68	50	24	35' 11"	28' 6"	24' 11"	22' 3"	19' 5"	16' 5"	20' 2"	17' 8"	14' 11"	18' 9"	16' 5"	13' 10"	17' 8"	15' 5"	13' 0"	16' 9"	14' 8"	12' 4"	16' 0"	14' 0"	11' 10"	14' 11"	13' 0"	11' 0"
600S200-68	50	12	47' 7"	37' 9"	33' 0"	29' 6"	25' 9"	21' 9"	26' 9"	23' 5"	19' 9"	24' 10"	21' 9"	18' 4"	23' 5"	20' 5"	17' 3"	22' 3"	19' 5"	16' 4"	21' 3"	18' 7"	15' 8"	19' 9"	17' 3"	14' 6"
600S200-68	50	16	43' 2"	34' 3"	29' 11"	26' 9"	23' 5"	19' 9"	24' 4"	21' 3"	17' 11"	22' 7"	19' 9"	16' 8"	21' 3"	18' 7"	15' 8"	20' 2"	17' 8"	14' 11"	19' 4"	16' 10"	14' 3"	17' 11"	15' 8"	13' 2"
600S200-68	50	24	37' 9"	29' 11"	26' 2"	23' 5"	20' 5"	17' 3"	21' 3"	18' 7"	15' 8"	19' 9"	17' 3"	14' 6"	18' 7"	16' 3"	13' 8"	17' 8"	15' 5"	13' 0"	16' 10"	14' 9"	12' 5"	15' 8"	13' 8"	11' 6"
600S250-68	50	12	49' 10"	39' 7"	34' 7"	30' 11"	27' 0"	22' 9"	28' 1"	24' 6"	20' 8"	26' 1"	22' 9"	19' 2"	24' 6"	21' 5"	18' 1"	23' 4"	20' 4"	17' 2"	22' 3"	19' 6"	16' 5"	20' 8"	18' 1"	15' 3"
600S250-68	50	16	45' 4"	35' 11"	31' 5"	28' 1"	24' 6"	20' 8"	25' 6"	22' 3"	18' 10"	23' 8"	20' 8"	17' 5"	22' 3"	19' 6"	16' 5"	21' 2"	18' 6"	15' 7"	20' 3"	17' 8"	14' 11"	18' 10"	16' 5"	13' 10"
600S250-68	50	24	39' 7"	31' 5"	27' 5"	24' 6"	21' 5"	18' 1"	22' 3"	19' 6"	16' 5"	20' 8"	18' 1"	15' 3"	19' 6"	17' 0"	14' 4"	18' 6"	16' 2"	13' 8"	17' 8"	15' 5"	13' 0"	16' 2"	14' 4"	12' 1"
600S300-68	50	12	52' 0"	41' 3"	36' 0"	32' 3"	28' 2"	23' 9"	29' 3"	25' 7"	21' 7"	27' 2"	23' 9"	20' 0"	25' 7"	22' 4"	18' 10"	24' 3"	21' 3"	17' 11"	23' 3"	20' 4"	17' 1"	21' 7"	18' 10"	15' 11"
600S300-68	50	16	47' 3"	37' 6"	32' 9"	29' 3"	25' 7"	21' 7"	26' 7"	23' 3"	19' 7"	24' 8"	21' 7"	18' 2"	23' 3"	20' 4"	17' 1"	22' 1"	19' 3"	16' 3"	21' 1"	18' 5"	15' 7"	19' 7"	17' 1"	14' 5"
600S300-68	50	24	41' 3"	32' 9"	28' 7"	25' 7"	22' 4"	18' 10"	23' 3"	20' 4"	17' 1"	21' 7"	18' 10"	15' 11"	20' 4"	17' 9"	14' 11"	19' 3"	16' 10"	14' 2"	18' 5"	16' 1"	13' 7"	16' 5"	14' 11"	12' 7"
600S137-97	50	12	47' 11"	38' 0"	33' 2"	29' 8"	25' 11"	21' 10"	27' 0"	23' 7"	19' 10"	25' 0"	21' 10"	18' 5"	23' 7"	20' 7"	17' 4"	22' 5"	19' 7"	16' 6"	21' 5"	18' 8"	15' 9"	19' 10"	17' 4"	14' 8"
600S137-97	50	16	43' 6"	34' 6"	30' 2"	27' 0"	23' 7"	19' 10"	24' 6"	21' 5"	18' 1"	22' 9"	19' 10"	16' 9"	21' 5"	18' 8"	15' 9"	20' 4"	17' 9"	15' 0"	19' 5"	17' 0"	14' 4"	18' 1"	15' 9"	13' 4"
600S137-97	50	24	38' 0"	30' 2"	26' 4"	23' 7"	20' 7"	17' 4"	21' 5"	18' 8"	15' 9"	19' 10"	17' 4"	14' 8"	18' 8"	16' 4"	13' 9"	17' 9"	15' 6"	13' 1"	17' 0"	14' 10"	12' 6"	15' 9"	13' 9"	11' 7"
600S162-97	50	12	50' 1"	39' 9"	34' 9"	31' 1"	27' 2"	22' 11"	28' 3"	24' 8"	20' 9"	26' 2"	22' 11"	19' 4"	24' 8"	21' 6"	18' 2"	23' 5"	20' 5"	17' 3"	22' 5"	19' 7"	16' 6"	20' 9"	18' 2"	15' 4"
600S162-97	50	16	45' 6"	36' 2"	31' 7"	28' 3"	24' 8"	20' 9"	25' 8"	22' 5"	18' 11"	23' 10"	20' 9"	17' 6"	22' 5"	19' 7"	16' 6"	21' 3"	18' 7"	15' 8"	20' 4"	17' 9"	15' 0"	18' 11"	16' 6"	13' 11"
600S162-97	50	24	39' 9"	31' 7"	27' 7"	24' 8"	21' 6"	18' 2"	22' 5"	19' 7"	16' 6"	20' 9"	18' 2"	15' 4"	19' 7"	17' 1"	14' 5"	18' 7"	16' 3"	13' 8"	17' 9"	15' 6"	13' 1"	16' 6"	14' 5"	12' 2"
600S200-97	50	12	52' 10"	41' 11"	36' 7"	32' 9"	28' 7"	24' 1"	29' 9"	26' 0"	21' 11"	27' 7"	24' 1"	20' 4"	26' 0"	22' 8"	19' 2"	24' 8"	21' 7"	18' 2"	23' 7"	20' 7"	17' 5"	21' 11"	19' 2"	16' 2"
600S200-97	50	16	48' 0"	38' 1"	33' 3"	29' 9"	26' 0"	21' 11"	27' 0"	23' 7"	19' 11"	25' 1"	21' 11"	18' 6"	23' 7"	20' 7"	17' 5"	22' 5"	19' 7"	16' 6"	21' 5"	18' 9"	15' 10"	19' 11"	17' 5"	14' 8"
600S200-97	50	24	41' 11"	33' 3"	29' 1"	26' 0"	22' 8"	19' 2"	23' 7"	20' 7"	17' 5"	21' 11"	19' 2"	16' 2"	20' 7"	18' 0"	15' 2"	19' 7"	17' 1"	14' 5"	18' 9"	16' 4"	13' 10"	17' 5"	15' 2"	12' 10"
600S250-97	50	12	55' 5"	44' 0"	38' 5"	34' 4"	30' 0"	25' 4"	31' 3"	27' 3"	23' 0"	29' 0"	25' 4"	21' 4"	27' 3"	23' 10"	20' 1"	25' 11"	22' 8"	19' 1"	24' 9"	21' 8"	18' 3"	23' 0"	20' 1"	16' 11"
600S250-97	50	16	50' 4"	40' 0"	34' 11"	31' 3"	27' 3"	23' 0"	28' 4"	24' 9"	20' 11"	26' 4"	23' 0"	19' 5"	24' 9"	21' 8"	18' 3"	23' 6"	20' 7"	17' 4"	22' 6"	19' 8"	16' 7"	20' 11"	18' 3"	15' 5"
600S250-97	50	24	44' 0"	34' 11"	30' 6"	27' 3"	23' 10"	20' 1"	24' 9"	21' 8"	18' 3"	23' 0"	20' 1"	16' 11"	21' 8"	18' 11"	15' 11"	20' 7"	18' 0"	15' 2"	19' 8"	17' 2"	14' 6"	18' 3"	15' 11"	13' 5"
600S300-97	50	12	57' 10"	45' 11"	40' 1"	35' 10"	31' 4"	26' 5"	32' 7"	28' 5"	24' 0"	30' 3"	26' 5"	22' 3"	28' 5"	24' 10"	21' 0"	27' 0"	23' 7"	19' 11"	25' 10"	22' 7"	19' 1"	24' 0"	21' 0"	17' 8"
600S300-97	50	16	52' 7"	41' 9"	36' 5"	32' 7"	28' 5"	24' 0"	29' 7"	25' 10"	21' 10"	27' 6"	24' 0"	20' 3"	25' 10"	22' 7"	19' 1"	24' 7"	21' 5"	18' 1"	23' 6"	20' 6"	17' 4"	21' 10"	19' 1"	16' 1"
600S300-97	50	24	45' 11"	36' 5"	31' 10"	28' 5"	24' 10"	21' 0"	25' 10"	22' 7"	19' 1"	24' 0"	21' 0"	17' 8"	22' 7"	19' 9"	16' 8"	21' 5"	18' 9"	15' 10"	20' 6"	17' 11"	15' 1"	19' 1"	16' 8"	14' 0"
800S137-33	33	12	37' 10" e	34' 3" e	30' 2" e	21' 10" e	21' 10" e	19' 11" e	18' 11" e	18' 11" e	18' 0" e	16' 11" e	16' 11" e	16' 9" e	15' 5" e	15' 5" e	15' 5" e	14' 3" e	14' 3" e	14' 3" e	13' 4" e	13' 4" e	13' 4" e	11' 11" e	11' 11" e	11' 11" e
800S137-33	33	16	32' 9" e	31' 1" e	27' 4" e	18' 11" e	18' 11" e	18' 0" e	16' 4" e	16' 4" e	16' 4" e	14' 8" e	14' 8" e	14' 8" e	13' 4" e	13' 4" e	13' 4" e	12' 4" e	12' 4" e	12' 4" e	11' 7" e	11' 7" e	11' 7" e	10' 4" e	10' 4" e	10' 4" e
800S137-33	33	24	26' 9" e	26' 9" e	23' 10" e	15' 5" e	15' 5" e	15' 5" e	13' 4" e	13' 4" e	13' 4" e	11' 11" e	11' 11" e	11' 11" e	10' 11" e	10' 11" e	10' 11" e	10' 1" e	10' 1" e	10' 1" e	9' 5" e	9' 5" e	9' 5" e	8' 5" e	8' 5" e	8' 5" e
800S162-33	33	12	41' 0" e	35' 8" e	31' 4" e	23' 8" e	23' 8" e	20' 8" e	20' 6" e	20' 6" e	18' 9" e	18' 4" e	18' 4" e	17' 5" e	16' 9" e	16' 9" e	16' 4" e	15' 6" e	15' 6" e	15' 6" e	14' 6" e	14' 6" e	14' 6" e	13' 0" e	13' 0" e	13' 0" e
800S162-33	33	16	35' 6" e	32' 4" e	28' 5" e	20' 6" e	20' 6" e	18' 9" e	17' 9" e	17' 9" e	17' 0" e	15' 11" e	15' 11" e	15' 9" e	14' 6" e	14' 6" e	14' 6" e	13' 5" e	13' 5" e	13' 5" e	12' 7" e	12' 7" e	12' 7" e	11' 3" e	11' 3" e	11' 3" e
800S162-33	33	24	29' 0" e	28' 2" e	24' 9" e	16' 9" e	16' 9" e	16' 4" e	14' 6" e	14' 6" e	14' 6" e	13' 0" e	13' 0" e	13' 0" e	11' 10" e	11' 10" e	11' 10" e	10' 11" e	10' 11" e	10' 11" e	10' 3" e	10' 3" e	10' 3" e	9' 2" e	9' 2" e	9' 2" e
800S200-33	33	12	44' 0" e	37' 9" e	33' 0" e	25' 5" e	25' 5" e	21' 8" e	22' 0" e	22' 0" e	19' 9" e	19' 8" e	19' 8" e	18' 4" e	18' 0" e	18' 0" e	17' 3" e	16' 8" e	16' 8" e	16' 4" e	15' 7" e	15' 7" e	15' 7" e	13' 11" e	13' 11" e	13' 11" e
800S200-33	33	16	38' 1" e	34' 3" e	29' 11" e	22' 0" e	22' 0" e	19' 9" e	19' 1" e	19' 1" e	17' 11" e	17' 1" e	17' 1" e	16' 8" e	15' 7" e	15' 7" e	15' 7" e	14' 5" e	14' 5" e	14' 5" e	13' 6" e	13' 6" e	13' 6" e	12' 1" e	12' 1" e	12' 1" e
800S200-33	33	24	31' 1" e	29' 11" e	26' 2" e	18' 0" e	18' 0" e	17' 3" e	15' 7" e	15' 7" e	15' 7" e	13' 11" e	13' 11" e	13' 11" e	12' 8" e	12' 8" e	12' 8" e	11' 9" e	11' 9" e	11' 9" e	11' 0" e	11' 0" e	11' 0" e	9' 6" e	9' 6" e	9' 6" e
800S137-43	33	12	45' 10"	37' 10"	33' 1"	26' 6"	25' 10"	21' 9"	22' 11"	22' 11"	19' 9"	20' 6" e	20' 6" e	18' 4"	18' 9" e	18' 9" e	17' 3" e	17' 4" e	17' 4" e	16' 5" e	16' 3" e	16' 3" e	15' 8" e	14' 6" e	14' 6" e	14' 6" e
800S137-43	33	16	39' 9"	34' 4"	30' 0"	22' 11"	22' 11"	19' 9"	19' 10" e	19' 10" e	18' 0"	17' 9" e	17' 9" e	16' 8" e	16' 3" e	16' 3" e	15' 8" e	15' 0" e	15' 0" e	14' 11" e	14' 1" e	14' 1" e	14' 1" e	12' 7" e	12' 7" e	12' 7" e
800S137-43	33	24	32' 5"	29' 11"	26' 3"	18' 9" e	18' 9" e	17' 3" e	16' 3" e	16' 3" e	15' 8" e	14' 6" e	14' 6" e	14' 6" e	13' 3" e	13' 3" e	13' 3" e	12' 3" e	12' 3" e	12' 3" e	11' 6" e	11' 6" e	11' 6" e	10' 3" e	10' 3" e	10' 3" e
800S162-43	33	12	49' 2"	39' 4"	34' 4"	28' 6"	26' 10"	22' 7"	24' 9" e	24' 4"	20' 7"	22' 1" e	22' 1" e	19' 1"	20' 2" e	20' 2" e	17' 11" e	18' 8" e	18' 8" e	17' 1" e	17' 6" e	17' 6" e	16' 4" e	15' 8" e	15' 8" e	15' 2" e
800S162-43	33	16	42' 10"	35' 8"	31' 2"	24' 9" e	24' 4"	20' 7"	21' 5" e	21' 5" e	18' 8" e	19' 2" e	19' 2" e	17' 4" e	17' 6" e	17' 6" e	16' 4" e	16' 2" e	16' 2" e	15' 6" e	15' 2" e	15' 2" e	14' 10" e	13' 6" e	13' 6" e	13' 6" e
800S162-43	33	24	34' 11"	31' 1"	27' 3"	20' 2" e	20' 2" e	17' 11" e	17' 6" e	17' 6" e	16' 4" e	15' 8" e	15' 8" e	15' 2" e	14' 3" e	14' 3" e	14' 3" e	13' 3" e	13' 3" e	13' 3" e	12' 4" e	12' 4" e	12' 4" e	11' 1" e	11' 1" e	11' 1" e
800S200-43	33	12	51' 10"	41' 1"	35' 11"	30' 6"	28' 1"	23' 8"	26' 5" e	25' 6" e	21' 6"	23' 8" e	23' 8" e	19' 11" e	21' 7" e	21' 7" e	18' 9" e	20' 0" e	20' 0" e	17' 10" e	18' 8" e	18' 8" e	17' 1" e	16' 9" e	16' 9" e	15' 10" e
800S200-43	33	16	45' 10"	37' 4"	32' 8"	26' 5" e	25' 6" e	21' 6"	22' 11" e	22' 11" e	19' 6" e	20' 6" e	20' 6" e	18' 2" e	18' 8" e	18' 8" e	17' 1" e	17' 4" e	17' 4" e	16' 2" e	16' 2" e	16' 2" e	15' 6" e	14' 6" e	14' 6" e	14' 5" e
800S200-43	33	24	37' 5"	32' 8"	28' 6"	21' 7" e	21' 7" e	18' 9" e	18' 8" e	18' 8" e	17' 1" e	16' 9" e	16' 9" e	15' 10" e	15' 3" e	15' 3" e	14' 11" e	14' 2" e	14' 2" e	14' 2" e	13' 3" e	13' 3" e	13' 3" e	11' 10" e	11' 10" e	11' 10" e
800S137-54	50	12	51' 2"	40' 7"	35' 6"	31' 9"	27' 8"	23' 4"	28' 10"	25' 2"	21' 3"	26' 9"	23' 4"	19' 9"	25' 2"	22' 0"	18' 7"	23' 3"	20' 11"	17' 7"	21' 9"	20' 0"	16' 10"	19' 6"	18' 7"	15' 8"
800S137-54	50	16	46' 5"	36' 11"	32' 3"	28' 10"	25' 2"	21' 3"	26' 2"	22' 10"	19' 3"	23' 10"	21' 3"	17' 11"	21' 9"	20' 0"	16' 10"	20' 2"	19' 0"	16' 0"	18' 10"	18' 2"	15' 4"	16' 10"	16' 10"	14' 3"
800S137-54	50	24	40' 6"	32' 3"	28' 2"	25' 2"	22' 0"	18' 7"	21' 9"	20' 0"	16' 10"	19' 6"	18' 7"	15' 8"	17' 9"	17' 5"	14' 9"	16' 6" e	16' 6" e	14' 0"	15' 5" e	15' 5" e	13' 4"	13' 9" e	13' 9" e	12' 5" e
800S162-54	50	12	53' 2"	42' 3"	36' 10"	33' 0"	28' 10"	24' 3"	29' 11"	26' 2"	22' 1"	27' 10"	24' 3"	20' 6"	26' 2"	22' 10"	19' 3"	24' 10"	21' 9"	18' 4"	23' 5"	20' 9"	17' 6"	20' 11"	19' 3"	16' 3"
800S162-54	50	16	48' 4"	38' 4"	33' 6"	29' 11"	26' 2"	22' 1"	27' 3"	23' 9"	20' 1"	25' 3"	22' 1"	18' 7"	23' 5"	20' 9"	17' 6"	21' 8"	19' 9"	16' 8"	20' 3"	18' 10"	15' 11"	18' 1" e	17' 6" e	14' 9"
800S162-54	50	24	42' 1"	33' 6"	29' 3"	26' 2"	22' 10"	19' 3"	23' 5"	20' 9"	17' 6"	20' 11"	19' 3"	16' 3"	19' 1"	18' 2"	15' 4"	17' 8" e	17' 3" e	14' 6"	16' 6" e	16' 6" e	13' 11"	14' 9" e	14' 9" e	12' 11" e
800S200-54	50	12	55' 8"	44' 2"	38' 7"	34' 6"	30' 2"	25' 5"	31' 4"	27' 5"	23' 1"	29' 1"	25' 5"	21' 5"	27' 5"	23' 11"	20' 2"	26' 0"	22' 9"	19' 2"	24' 10"	21' 9"	18' 4"	22' 4"	20' 2"	17' 0"
800S200-54	50	16	50' 7"	40' 2"	35' 1"	31' 4"	27' 5"	23' 1"	28' 6"	24' 10"	21' 0"	26' 5"	23' 1"	19' 6"	24' 10"	21' 9"	18' 4"	23' 1"	20' 8"	17' 5"	21' 7" e	19' 9"	16' 8"	19' 4" e	18' 4" e	15' 5"
800S200-54	50	24	44' 2"	35' 1"	30' 8"	27' 5"	23' 11"	20' 2"	24' 10"	21' 9"	18' 4"	22' 4"	20' 2"	17' 0"	20' 5" e	19' 0"	16' 0"	18' 10" e	18' 0" e	15' 2"	17' 8" e	17' 3" e	14' 7" e	15' 9" e	15' 9" e	13' 6" e
800S250-54	50	12	58' 1"	46' 1"	40' 3"	36' 0"	31' 5"	26' 6"	32' 8"	28' 7"	24' 1"	30' 4"	26' 6"	22' 4"	28' 7"	24' 11"	21' 1"	27' 2"	23' 8"	20' 0"	25' 6"	22' 8"	19' 1"	22' 10"	21' 1"	17' 9"
800S250-54	50	16	52' 9"	41' 10"	36' 7"	32' 8"	28' 7"	24' 1"	29' 8"	25' 11"	21' 11"	27' 7"	24' 1"	20' 4"	25' 6"	22' 8"	19' 1"	23' 8"	21' 6"	18' 2"	22' 1" e	20' 7"	17' 4"	19' 9" e	19' 1" e	16' 2"
800S250-54	50	24	46' 1"	36' 7"	31' 11"	28' 7"	24' 11"	21' 1"	25' 6"	22' 8"	19' 1"	22' 10"	21' 1"	17' 9"	20' 10" e	19' 10" e	16' 8"	19' 4" e	18' 10" e	15' 10"	18' 1" e	18' 0" e	15' 2" e	16' 2" e	16' 2" e	14' 1" e
800S300-54	50	12	60' 4"	47' 10"	41' 10"	37' 4"	32' 8"	27' 6"	33' 11"	29' 8"	25' 0"	31' 6"	27' 6"	23' 3"	29' 8"	25' 11"	21' 10"	27' 8"	24' 7"	20' 9"	25' 11"	23' 6"	19' 10"	23' 2" e	21' 10"	18' 5"
800S300-54	50	16	54' 9"	43' 6"	38' 0"	33' 11"	29' 8"	25' 0"	30' 10"	26' 11"	22' 9"	28' 4"	25' 0"	21' 1"	25' 11"	23' 6"	19' 10"	24' 0"	22' 4"	18' 10"	22' 5" e	21' 5"	18' 0"	20' 1" e	19' 10" e	16' 9"
800S300-54	50	24	47' 8"	38' 0"	33' 2"	29' 8"	25' 11"	21' 10"	25' 11"	23' 6"	19' 10"	23' 2" e	21' 10"	18' 5"	21' 2" e	20' 7" e	17' 4"	19' 7" e	19' 6" e	16' 6" e	18' 4" e	18' 4" e	15' 9" e	16' 5" e	16' 5" e	14' 8" e
800S137-68	50	12	54' 11"	43' 7"	38' 1"	34' 0"	29' 9"	25' 1"	30' 11"	27' 0"	22' 9"	28' 8"	25' 1"	21' 2"	27' 0"	23' 7"	19' 11"	25' 8"	22' 5"	18' 11"	24' 6"	21' 5"	18' 1"	22' 9"	19' 11"	16' 9"
800S137-68	50	16	49' 10"	39' 7"	34' 7"	30' 11"	27' 0"	22' 9"	28' 1"	24' 6"	20' 8"	26' 1"	22' 9"	19' 2"	24' 6"	21' 5"	18' 1"	23' 4"	20' 4"	17' 2"	22' 3"	19' 6"	16' 5"	19' 11"	18' 1"	15' 3"
800S137-68	50	24	43' 7"	34' 7"	30' 2"	27' 0"	23' 7"	19' 11"	24' 6"	21' 5"	18' 1"	22' 9"	19' 11"	16' 9"	21' 0"	18' 9"	15' 9"	19' 5"	17' 9"	15' 0"	18' 2"	17' 0"	14' 4"	16' 3"	15' 9"	13' 4"
800S162-68	50	12	57' 1"	45' 4"	39' 7"	35' 4"	30' 11"	26' 1"	32' 2"	28' 1"	23' 8"	29' 10"	26' 1"	22' 0"	28' 1"	24' 6"	20' 8"	26' 8"	23' 4"	19' 8"	25' 6"	22' 3"	18' 10"	23' 8"	20' 8"	17' 5"
800S162-68	50	16	51' 10"	41' 2"	35' 11"	32' 2"	28' 1"	23' 8"	29' 2"	25' 6"	21' 6"	27' 1"	23' 8"	20' 0"	25' 6"	22' 3"	18' 10"	24' 3"	21' 2"	17' 10"	23' 2"	20' 3"	17' 1"	21' 3"	18' 10"	15' 10"
800S162-68	50	24	45' 4"	35' 11"	31' 5"	28' 1"	24' 6"	20' 8"	25' 6"	22' 3"	18' 10"	23' 8"	20' 8"	17' 5"	22' 3"	19' 6"	16' 5"	20' 9"	18' 6"	15' 7"	19' 5"	17' 8"	14' 11"	17' 4"	16' 5"	13' 10"
800S200-68	50	12	59' 9"	47' 5"	41' 5"	37' 0"	32' 4"	27' 4"	33' 8"	29' 5"	24' 10"	31' 3"	27' 4"	23' 0"	29' 5"	25' 8"	21' 8"	27' 11"	24' 5"	20' 7"	26' 9"	23' 4"	19' 8"	24' 10"	21' 8"	18' 3"
800S200-68	50	16	54' 4"	43' 1"	37' 8"	33' 8"	29' 5"	24' 10"	30' 7"	26' 9"	22' 6"	28' 5"	24' 10"	20' 11"	26' 9"	23' 4"	19' 8"	25' 4"	22' 2"	18' 8"	24' 3"	21' 2"	17' 11"	22' 6"	19' 8"	16' 7"
800S200-68	50	24	47' 5"	37' 8"	32' 11"	29' 5"	25' 8"	21' 8"	26' 9"	23' 4"	19' 8"	24' 10"	21' 8"	18' 3"	23' 4"	20' 5"	17' 2"	22' 2"	19' 4"	16' 4"	21' 2"	18' 6"	15' 7"	19' 1" e	17' 2"	14' 6"
800S250-68	50	12	62' 5"	49' 6"	43' 3"	38' 8"	33' 9"	28' 6"	35' 2"	30' 8"	25' 11"	32' 7"	28' 6"	24' 0"	30' 8"	26' 10"	22' 7"	29' 2"	25' 6"	21' 6"	27' 11"	24' 4"	20' 7"	25' 11"	22' 7"	19' 1"
800S250-68	50	16	56' 8"	45' 0"	39' 4"	35' 2"	30' 8"	25' 11"	31' 11"	27' 11"	23' 6"	29' 8"	25' 11"	21' 10"	27' 11"	24' 4"	20' 7"	26' 6"	23' 2"	19' 6"	25' 4"	22' 2"	18' 8"	23' 2"	20' 7"	17' 4"
800S250-68	50	24	49' 6"	39' 4"	34' 4"	30' 8"	26' 10"	22' 7"	27' 11"	24' 4"	20' 7"	25' 11"	22' 7"	19' 1"	24' 4"	21' 3"	17' 11"	22' 8"	20' 3"	17' 1"	21' 2"	19' 4"	16' 4"	18' 11" e	17' 11" e	15' 2"
800S300-68	50	12	64' 10"	51' 5"	44' 11"	40' 2"	35' 1"	29' 7"	36' 6"	31' 11"	26' 11"	33' 11"	29' 7"	25' 0"	31' 11"	27' 10"	23' 6"	30' 3"	26' 5"	22' 4"	29' 0"	25' 4"	21' 4"	26' 11"	23' 6"	19' 10"
800S300-68	50	16	58' 11"	46' 9"	40' 10"	36' 6"	31' 11"	26' 11"	33' 2"	29' 0"	24' 5"	30' 9"	26' 11"	22' 8"	29' 0"	25' 4"	21' 4"	27' 6"	24' 0"	20' 3"	26' 4"	23' 0"	19' 5"	23' 7"	21' 4"	18' 0"
800S300-68	50	24	51' 5"	40' 10"	35' 8"	31' 11"	27' 10"	23' 6"	29' 0"	25' 4"	21' 4"	26' 11"	23' 6"	19' 10"	24' 10"	22' 1"	18' 8"	23' 0"	21' 0"	17' 9"	21' 6"	20' 1"	16' 11"	19' 3" e	18' 8" e	15' 9"
800S137-97	50	12	60' 10"	48' 4"	42' 2"	37' 9"	32' 11"	27' 10"	34' 3"	29' 11"	25' 3"	31' 10"	27' 10"	23' 5"	29' 11"	26' 2"	22' 1"	28' 5"	24' 10"	20' 11"	27' 2"	23' 9"	20' 1"	25' 3"	22' 1"	18' 7"
800S137-97	50	16	55' 4"	43' 11"	38' 4"	34' 3"	29' 11"	25' 3"	31' 2"	27' 2"	22' 11"	28' 11"	25' 3"	21' 4"	27' 2"	23' 9"	20' 1"	25' 10"	22' 7"	19' 0"	24' 9"	21' 7"	18' 3"	22' 11"	20' 1"	16' 11"
800S137-97	50	24	48' 4"	38' 4"	33' 6"	29' 11"	26' 2"	22' 1"	27' 2"	23' 9"	20' 1"	25' 3"	22' 1"	18' 7"	23' 9"	20' 9"	17' 6"	22' 7"	19' 9"	16' 8"	21' 7"	18' 10"	15' 11"	20' 1"	17' 6"	14' 9"
800S162-97	50	12	63' 5"	50' 4"	43' 11"	39' 3"	34' 4"	28' 11"	35' 8"	31' 2"	26' 4"	33' 2"	28' 11"	24' 5"	31' 2"	27' 3"	23' 0"	29' 7"	25' 11"	21' 10"	28' 4"	24' 9"	20' 10"	26' 4"	23' 0"	19' 5"
800S162-97	50	16	57' 7"	45' 9"	39' 11"	35' 8"	31' 2"	26' 4"	32' 5"	28' 4"	23' 11"	30' 1"	26' 4"	22' 2"	28' 4"	24' 9"	20' 10"	26' 11"	23' 6"	19' 10"	25' 9"	22' 6"	19' 0"	23' 11"	20' 10"	17' 7"
800S162-97	50	24	50' 4"	39' 11"	34' 11"	31' 2"	27' 3"	23' 0"	28' 4"	24' 9"	20' 10"	26' 4"	23' 0"	19' 5"	24' 9"	21' 7"	18' 3"	23' 6"	20' 6"	17' 4"	22' 6"	19' 8"	16' 7"	20' 10"	18' 3"	15' 5"
800S200-97	50	12	66' 6"	52' 9"	46' 1"	41' 2"	36' 0"	30' 4"	37' 5"	32' 8"	27' 7"	34' 9"	30' 4"	25' 7"	32' 8"	28' 7"	24' 1"	31' 1"	27' 2"	22' 11"	29' 9"	25' 11"	21' 11"	27' 7"	24' 1"	20' 4"
800S200-97	50	16	60' 5"	47' 11"	41' 11"	37' 5"	32' 8"	27' 7"	34' 0"	29' 9"	25' 1"	31' 7"	27' 7"	23' 3"	29' 9"	25' 11"	21' 11"	28' 3"	24' 8"	20' 10"	27' 0"	23' 7"	19' 11"	25' 1"	21' 11"	18' 6"
800S200-97	50	24	52' 9"	41' 11"	36' 7"	32' 8"	28' 7"	24' 1"	29' 9"	25' 11"	21' 11"	27' 7"	24' 1"	20' 4"	25' 11"	22' 8"	19' 1"	24' 8"	21' 6"	18' 2"	23' 7"	20' 7"	17' 5"	21' 11"	19' 1"	16' 2"
800S250-97	50	12	69' 6"	55' 2"	48' 2"	43' 1"	37' 7"	31' 9"	39' 1"	34' 2"	28' 10"	36' 4"	31' 9"	26' 9"	34' 2"	29' 10"	25' 2"	32' 6"	28' 4"	23' 11"	31' 1"	27' 2"	22' 11"	28' 10"	25' 2"	21' 3"
800S250-97	50	16	63' 1"	50' 1"	43' 9"	39' 1"	34' 2"	28' 10"	35' 7"	31' 1"	26' 2"	33' 0"	28' 10"	24' 4"	31' 1"	27' 2"	22' 11"	29' 6"	25' 9"	21' 9"	28' 3"	24' 8"	20' 9"	26' 2"	22' 11"	19' 4"
800S250-97	50	24	55' 2"	43' 9"	38' 3"	34' 2"	29' 10"	25' 2"	31' 1"	27' 2"	22' 11"	28' 10"	25' 2"	21' 3"	27' 2"	23' 8"	20' 0"	25' 9"	22' 6"	19' 0"	24' 8"	21' 6"	18' 2"	22' 11"	20' 0"	16' 10"
800S300-97	50	12	72' 3"	57' 4"	50' 1"	44' 9"	39' 1"	33' 0"	40' 8"	35' 6"	30' 0"	37' 9"	33' 0"	27' 10"	35' 6"	31' 1"	26' 2"	33' 9"	29' 6"	24' 10"	32' 3"	28' 2"	23' 9"	30' 0"	26' 2"	22' 1"
800S300-97	50	16	65' 8"	52' 1"	45' 6"	40' 8"	35' 6"	30' 0"	37' 0"	32' 3"	27' 3"	34' 4"	30' 0"	25' 3"	32' 3"	28' 2"	23' 9"	30' 8"	26' 10"	22' 7"	29' 4"	25' 8"	21' 7"	27' 3"	23' 9"	20' 1"
800S300-97	50	24	57' 4"	45' 6"	39' 9"	35' 6"	31' 1"	26' 2"	32' 3"	28' 2"	23' 9"	30' 0"	26' 2"	22' 1"	28' 2"	24' 8"	20' 9"	26' 10"	23' 5"	19' 9"	25' 8"	22' 5"	18' 11"	23' 9"	20' 9"	17' 6"

Notes

1. Lateral loads have not been modified for strength checks.
2. Lateral loads > 5 psf have been multiplied by 0.7 for deflection determination per IBC Table 1604.3, footnote f.
3. Flexural strength taken as the minimum of local buckling and distortional buckling allowable moments.
4. For distortional buckling allowable moment, kf = 0.
5. Moment of inertia for deflection is calculated at the maximum service level stress for the height listed. Note that this value may be higher than the effective Ixx listed in section property tables.
6. Limiting heights based on continuous support of each flange over the full length of the stud.
7. Limiting heights are based on steel properties only (non-composite).
8. Web crippling check based on 1 inch end bearing. Where listed limiting heights are followed by “e”, web stiffeners are required.
9. Shear and web crippling capacity have not been reduced for punchouts.
10. Limiting heights meet the 2009 and 2012 International Building Code.

CURTAIN WALL CONSTRUCTION

Infill allowing for vertical movement

Provision for vertical movement of the building structure, without transfer of compressive loads to the exterior curtain wall, is frequently desirable. The details on the following pages are applicable for attaching all types of steel studs, whether they are installed as individual components, as prefabricated framing assemblies or as prefinished panels with exterior facing in place.

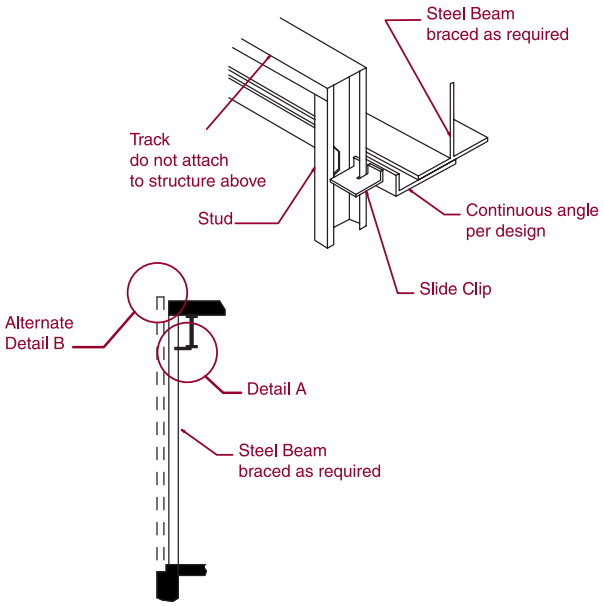

Infill wall

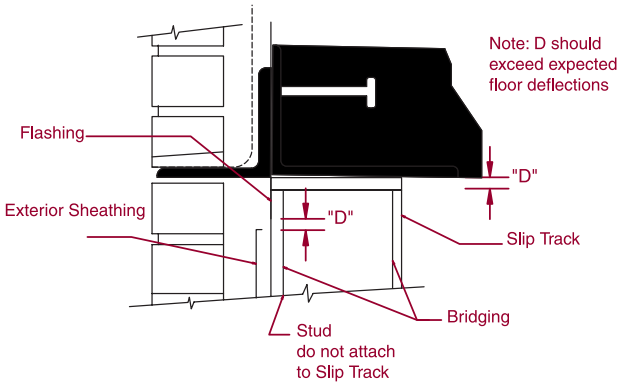

Alternative Detail B

Full height, by passing primary frame with provision for vertical movement

Stud wall (base connection to resist overturning due to lateral forces)

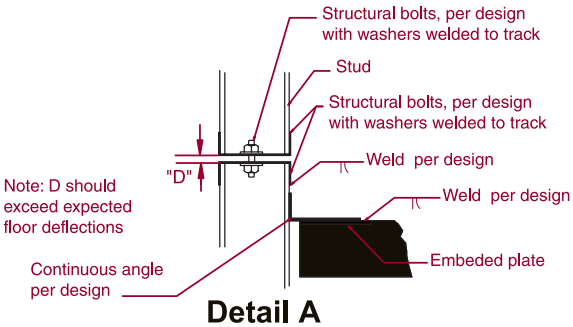

Detail A

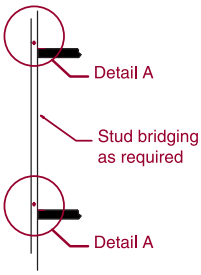

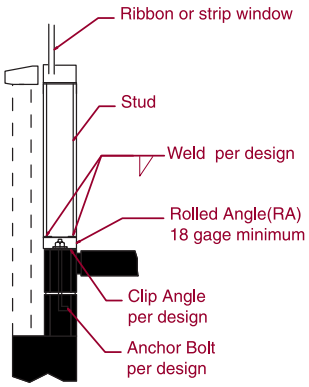

Masonry Construction

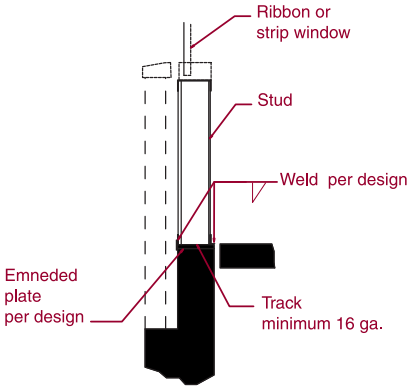

C.I.P. Concrete Construction

CURTAIN WALL CONSTRUCTION

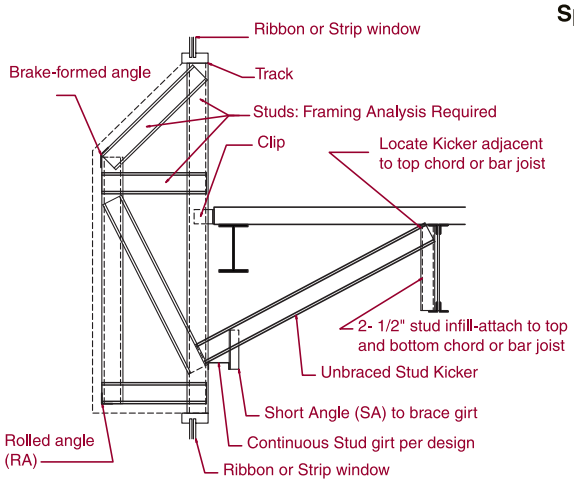

Recessed window with diagonal kicker

Spandrel conditions

Designer Note:

1. As spandrel walls must be rigidly attached to the primary frame, designer must allow for vertical movements in the construction of the window head.
2. Fire safing required in stud cavity where necessary.

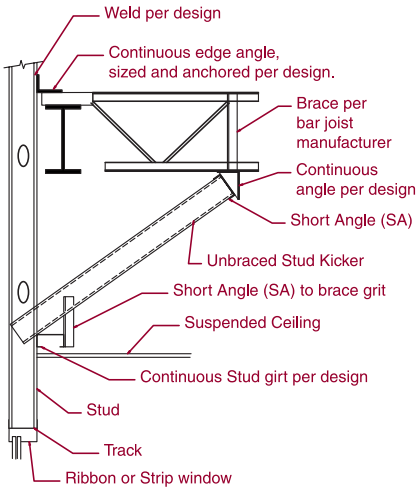

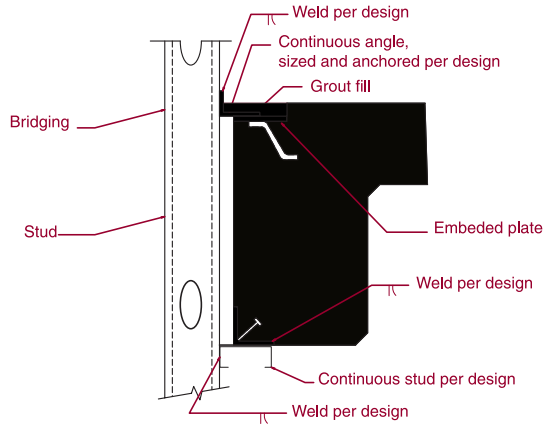

C.I.P. Concrete Construction

Designer Note:
Continuous edge angle sized and attached per design (studs may attach directly to the edge angle, however extreme care must be taken to assure that the angle is furnished straight and attached plumb and aligned, floor to floor).

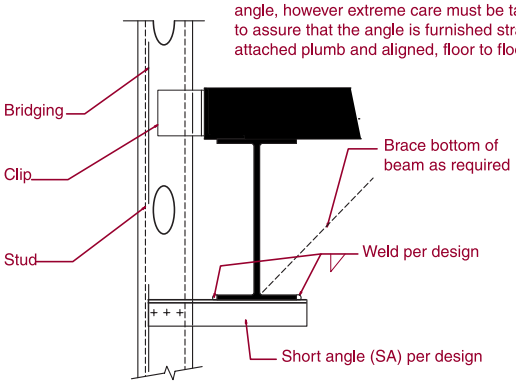

C.I.P. Concrete Construction

Detail A - anchorage at base (one to two story only)

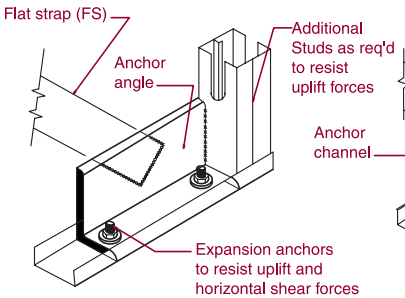

Alternate detail A - anchorage at base (greater than two-stroy)

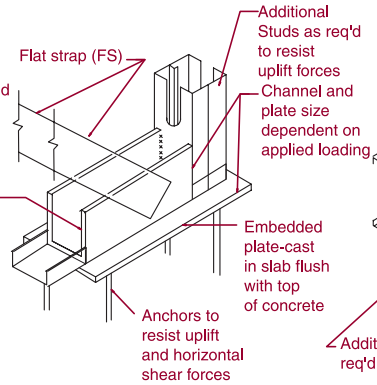

Detail B - anchorage at intermediate floors

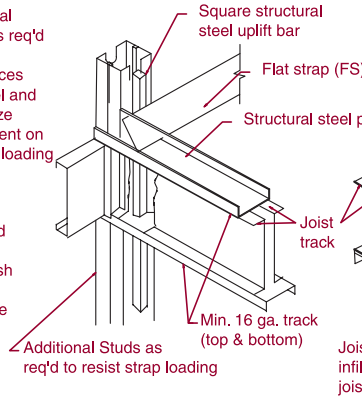

Detail C - Attachment at top

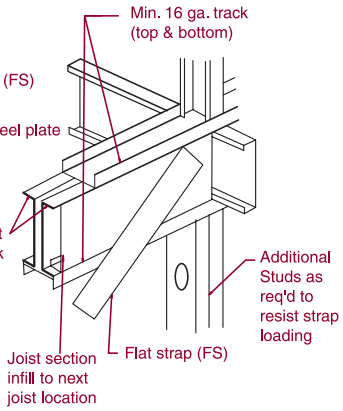

ALLOWABLE AXIAL LOAD TABLES

5 PSF LATERAL LOAD

		350S137-mils (Fy)								350S162-mils (Fy)								350S200-mils (Fy)								350S250-mils (Fy)			350S300-mils (Fy)		
Wall Ht. (ft)	Spacing (in) o.c.	-33 (33)	-43 (33)	-54 (33)	-54 (50)	-68 (33)	-68 (50)	-97 (33)	-97 (50)	-33 (33)	-43 (33)	-54 (33)	-54 (50)	-68 (33)	-68 (50)	-97 (33)	-97 (50)	-33 (33)	-43 (33)	-54 (33)	-54 (50)	-68 (33)	-68 (50)	-97 (33)	-97 (50)	-54 (50)	-68 (50)	-97 (50)	-54 (50)	-68 (50)	-97 (50)
	12	1.44	2.07	2.73	3.16	3.56	4.13	5.08	5.98	1.81	2.56	3.35	3.97	4.30	5.08	6.20	7.48	2.19	3.17	4.14	4.95	5.26	6.31	7.47	9.05	5.60	7.33	10.45	5.65	7.79	11.61
8	16	1.37	1.99	2.66	3.10	3.49	4.06	5.01	5.92	1.74	2.48	3.27	3.90	4.22	5.01	6.12	7.41	2.10	3.09	4.05	4.87	5.18	6.23	7.39	8.98	5.51	7.24	10.38	5.57	7.70	11.53
	24	1.23	1.85	2.50	2.97	3.36	3.93	4.87	5.80	1.58	2.32	3.11	3.76	4.08	4.87	5.97	7.27	1.94	2.92	3.88	4.71	5.02	6.08	7.23	8.84	5.34	7.07	10.23	5.41	7.53	11.37
	12	1.33	1.93	2.56	2.92	3.35	3.82	4.96	5.84	1.67	2.38	3.13	3.65	4.03	4.67	5.83	6.88	2.03	2.95	3.86	4.55	4.93	5.79	7.02	8.31	5.24	6.73	9.62	5.30	7.22	10.86
9	16	1.24	1.84	2.46	2.84	3.26	3.74	4.86	5.76	1.57	2.28	3.02	3.56	3.94	4.58	5.73	6.79	1.92	2.85	3.75	4.45	4.83	5.69	6.91	8.22	5.13	6.62	9.53	5.20	7.11	10.76
	24	1.07	1.66	2.27	2.69	3.09	3.58	4.68	5.60	1.39	2.09	2.82	3.39	3.75	4.41	5.53	6.62	1.72	2.64	3.54	4.25	4.63	5.50	6.71	8.05	4.91	6.41	9.35	5.00	6.90	10.55
	12	1.20	1.77	2.35	2.64	3.11	3.47	4.60	5.29	1.51	2.18	2.87	3.29	3.73	4.23	5.41	6.22	1.85	2.71	3.55	4.09	4.56	5.23	6.52	7.52	4.79	6.09	8.74	4.90	6.63	9.89
10	16	1.10	1.66	2.23	2.55	3.00	3.37	4.48	5.19	1.40	2.07	2.75	3.19	3.62	4.12	5.28	6.12	1.73	2.58	3.42	3.97	4.44	5.11	6.39	7.41	4.66	5.97	8.63	4.78	6.50	9.76
	24	0.91	1.45	2.01	2.37	2.79	3.18	4.25	5.00	1.19	1.84	2.51	2.99	3.40	3.92	5.05	5.92	1.49	2.34	3.17	3.75	4.20	4.89	6.15	7.21	4.41	5.72	8.41	4.53	6.25	9.51
	12	0.93	1.41	1.89	2.09	2.56	2.73	3.78	4.12	1.18	1.75	2.32	2.56	3.07	3.31	4.48	4.86	1.47	2.19	2.89	3.17	3.78	4.08	5.44	5.90	3.74	4.79	6.93	4.13	5.46	7.89
12	16	0.80	1.28	1.74	1.97	2.42	2.61	3.63	4.00	1.04	1.61	2.16	2.44	2.92	3.18	4.32	4.73	1.32	2.03	2.73	3.03	3.61	3.94	5.27	5.77	3.58	4.64	6.79	3.96	5.29	7.73
	24	0.58	1.03	1.48	1.76	2.16	2.39	3.34	3.77	0.79	1.34	1.87	2.21	2.65	2.94	4.02	4.50	1.03	1.73	2.42	2.76	3.32	3.68	4.95	5.52	3.28	4.34	6.53	3.64	4.97	7.42
	12	0.66	1.06	1.44	1.60	1.99	2.10	2.96	3.15	0.86	1.33	1.78	1.95	2.41	2.54	3.54	3.75	1.09	1.68	2.25	2.41	2.99	3.14	4.35	4.58	2.86	3.71	5.43	3.29	4.28	6.22
14	16	0.53	0.91	1.28	1.47	1.84	1.97	2.79	3.02	0.71	1.17	1.61	1.82	2.24	2.40	3.36	3.61	0.92	1.51	2.06	2.26	2.81	2.99	4.15	4.43	2.69	3.54	5.27	3.10	4.09	6.03
	24	0.30	0.65	1.00	1.25	1.56	1.74	2.49	2.79	0.46	0.89	1.31	1.58	1.95	2.16	3.03	3.36	0.63	1.19	1.74	1.99	2.48	2.72	3.80	4.17	2.38	3.23	4.98	2.76	3.74	5.70
	12	0.45	0.75	1.04	1.20	1.49	1.60	2.24	2.42	0.59	0.96	1.31	1.48	1.82	1.95	2.71	2.90	0.76	1.23	1.68	1.84	2.29	2.43	3.36	3.58	2.19	2.88	4.28	2.53	3.34	4.92
16	16	0.32	0.61	0.89	1.08	1.34	1.47	2.07	2.29	0.45	0.80	1.14	1.35	1.66	1.81	2.53	2.77	0.60	1.06	1.50	1.69	2.10	2.28	3.17	3.43	2.02	2.71	4.12	2.34	3.14	4.73
	24	0.09	0.36	0.62	0.87	1.07	1.24	1.78	2.06	0.21	0.54	0.85	1.12	1.37	1.57	2.21	2.52	0.32	0.76	1.19	1.42	1.79	2.01	2.82	3.16	1.72	2.40	3.82	2.00	2.80	4.38

		362S137-mils (Fy)								362S162-mils (Fy)								362S200-mils (Fy)								362S250-mils (Fy)			362S300-mils (Fy)		
Wall Ht. (ft)	Spacing (in) o.c.	-33 (33)	-43 (33)	-54 (33)	-54 (50)	-68 (33)	-68 (50)	-97 (33)	-97 (50)	-33 (33)	-43 (33)	-54 (33)	-54 (50)	-68 (33)	-68 (50)	-97 (33)	-97 (50)	-33 (33)	-43 (33)	-54 (33)	-54 (50)	-68 (33)	-68 (50)	-97 (33)	-97 (50)	-54 (50)	-68 (50)	-97 (50)	-54 (50)	-68 (50)	-97 (50)
	12	1.49	2.14	2.87	3.32	3.70	4.37	5.21	6.12	1.87	2.65	3.51	4.15	4.47	5.38	6.49	7.90	2.25	3.28	4.32	5.18	5.50	6.68	7.81	9.57	5.82	7.76	11.05	5.86	8.17	12.16
8	16	1.42	2.07	2.80	3.26	3.62	4.30	5.14	6.06	1.80	2.57	3.43	4.08	4.39	5.31	6.41	7.83	2.17	3.20	4.23	5.10	5.42	6.60	7.73	9.50	5.73	7.67	10.98	5.78	8.08	12.08
	24	1.29	1.93	2.64	3.13	3.46	4.17	5.00	5.95	1.65	2.42	3.27	3.94	4.22	5.17	6.26	7.70	2.01	3.03	4.06	4.94	5.27	6.45	7.57	9.36	5.56	7.50	10.83	5.63	7.91	11.92
	12	1.38	2.01	2.70	3.11	3.49	4.07	5.13	6.05	1.74	2.48	3.30	3.86	4.21	4.99	6.13	7.32	2.10	3.07	4.06	4.79	5.18	6.17	7.37	8.84	5.46	7.17	10.24	5.53	7.65	11.48
9	16	1.30	1.92	2.60	3.02	3.39	3.99	5.04	5.97	1.64	2.38	3.20	3.77	4.10	4.90	6.03	7.23	2.00	2.96	3.95	4.69	5.08	6.07	7.27	8.75	5.35	7.06	10.14	5.43	7.55	11.37
	24	1.13	1.74	2.41	2.87	3.19	3.82	4.85	5.81	1.46	2.19	2.99	3.60	3.89	4.72	5.84	7.06	1.80	2.76	3.74	4.49	4.89	5.88	7.07	8.58	5.14	6.85	9.96	5.23	7.33	11.16
	12	1.26	1.85	2.50	2.85	3.24	3.73	4.87	5.67	1.58	2.29	3.05	3.53	3.91	4.55	5.72	6.67	1.93	2.84	3.76	4.37	4.83	5.61	6.88	8.06	5.08	6.54	9.36	5.16	7.06	10.59
10	16	1.16	1.75	2.38	2.75	3.12	3.63	4.75	5.57	1.47	2.17	2.93	3.42	3.77	4.44	5.60	6.57	1.81	2.71	3.63	4.25	4.70	5.49	6.76	7.95	4.95	6.40	9.25	5.03	6.93	10.46
	24	0.96	1.54	2.16	2.57	2.88	3.44	4.53	5.38	1.26	1.95	2.68	3.22	3.52	4.23	5.37	6.37	1.57	2.47	3.38	4.01	4.47	5.27	6.51	7.74	4.69	6.15	9.03	4.79	6.67	10.21
	12	0.99	1.51	2.04	2.27	2.68	2.97	4.07	4.48	1.25	1.87	2.50	2.79	3.23	3.60	4.80	5.29	1.56	2.32	3.10	3.45	4.04	4.44	5.81	6.42	4.06	5.21	7.53	4.40	5.85	8.56
12	16	0.86	1.37	1.89	2.15	2.51	2.85	3.91	4.36	1.11	1.72	2.34	2.66	3.06	3.47	4.64	5.16	1.40	2.16	2.93	3.30	3.88	4.30	5.64	6.28	3.90	5.05	7.38	4.23	5.67	8.40
	24	0.63	1.12	1.62	1.93	2.21	2.62	3.62	4.13	0.86	1.44	2.04	2.42	2.75	3.22	4.33	4.92	1.12	1.86	2.62	3.03	3.58	4.03	5.32	6.02	3.59	4.74	7.11	3.91	5.34	8.08
	12	0.72	1.15	1.58	1.75	2.09	2.30	3.23	3.45	0.93	1.44	1.94	2.14	2.55	2.78	3.85	4.10	1.18	1.81	2.44	2.64	3.24	3.43	4.71	5.00	3.12	4.05	5.91	3.55	4.66	6.76
14	16	0.59	1.00	1.41	1.62	1.91	2.16	3.06	3.32	0.78	1.28	1.77	2.00	2.36	2.64	3.67	3.95	1.01	1.63	2.25	2.48	3.06	3.27	4.51	4.84	2.94	3.87	5.75	3.35	4.46	6.57
	24	0.34	0.73	1.11	1.39	1.59	1.92	2.74	3.07	0.52	0.99	1.45	1.75	2.01	2.38	3.33	3.69	0.70	1.31	1.91	2.19	2.72	2.99	4.14	4.56	2.62	3.54	5.45	3.00	4.09	6.22
	12	0.50	0.83	1.16	1.33	1.56	1.76	2.47	2.66	0.65	1.06	1.45	1.63	1.93	2.14	2.98	3.18	0.84	1.36	1.85	2.01	2.51	2.66	3.69	3.91	2.40	3.15	4.67	2.77	3.64	5.36
16	16	0.36	0.68	1.00	1.20	1.38	1.63	2.30	2.53	0.51	0.90	1.27	1.49	1.74	2.00	2.79	3.04	0.67	1.18	1.66	1.86	2.32	2.50	3.48	3.76	2.22	2.97	4.50	2.56	3.44	5.16
	24	0.12	0.42	0.71	0.97	1.07	1.39	1.98	2.28	0.25	0.62	0.97	1.25	1.40	1.74	2.46	2.78	0.38	0.86	1.33	1.58	1.99	2.21	3.11	3.47	1.90	2.64	4.19	2.21	3.07	4.80

		400S137-mils (Fy)								400S162-mils (Fy)								400S200-mils (Fy)								400S250-mils (Fy)			400S300-mils (Fy)		
Wall Ht. (ft)	Spacing (in) o.c.	-33 (33)	-43 (33)	-54 (33)	-54 (50)	-68 (33)	-68 (50)	-97 (33)	-97 (50)	-33 (33)	-43 (33)	-54 (33)	-54 (50)	-68 (33)	-68 (50)	-97 (33)	-97 (50)	-33 (33)	-43 (33)	-54 (33)	-54 (50)	-68 (33)	-68 (50)	-97 (33)	-97 (50)	-54 (50)	-68 (50)	-97 (50)	-54 (50)	-68 (50)	-97 (50)
	12	1.61	2.31	3.14	3.67	4.17	4.98	5.57	6.49	2.03	2.87	3.83	4.62	5.07	6.18	7.31	9.12	2.42	3.55	4.70	5.77	6.17	7.63	8.77	11.06	6.27	8.67	12.78	6.40	9.03	13.84
8	16	1.55	2.25	3.06	3.61	4.09	4.91	5.51	6.44	1.96	2.80	3.75	4.55	4.99	6.11	7.24	9.05	2.34	3.48	4.62	5.70	6.09	7.56	8.70	10.99	6.19	8.59	12.71	6.33	8.95	13.76
	24	1.42	2.12	2.92	3.49	3.94	4.78	5.39	6.34	1.82	2.66	3.60	4.42	4.83	5.97	7.10	8.92	2.19	3.32	4.46	5.54	5.92	7.41	8.55	10.85	6.04	8.43	12.57	6.18	8.79	13.61
	12	1.52	2.20	3.00	3.49	4.01	4.79	5.51	6.43	1.91	2.72	3.65	4.37	4.83	5.85	7.00	8.60	2.28	3.37	4.47	5.43	5.87	7.19	8.38	10.39	6.03	8.28	12.02	6.11	8.67	13.13
9	16	1.44	2.12	2.91	3.42	3.91	4.70	5.43	6.37	1.82	2.63	3.55	4.28	4.73	5.76	6.91	8.52	2.19	3.27	4.37	5.33	5.77	7.10	8.29	10.30	5.93	8.17	11.93	6.01	8.56	13.03
	24	1.28	1.95	2.73	3.27	3.71	4.54	5.27	6.23	1.65	2.46	3.36	4.11	4.52	5.59	6.72	8.35	2.00	3.08	4.17	5.14	5.55	6.91	8.09	10.13	5.73	7.96	11.74	5.83	8.36	12.83
	12	1.41	2.07	2.84	3.28	3.79	4.49	5.43	6.36	1.77	2.56	3.44	4.08	4.56	5.47	6.63	8.00	2.13	3.16	4.22	5.04	5.54	6.70	7.94	9.65	5.70	7.78	11.18	5.78	8.26	12.39
10	16	1.31	1.97	2.72	3.19	3.67	4.38	5.32	6.27	1.67	2.45	3.32	3.97	4.43	5.36	6.52	7.90	2.01	3.04	4.09	4.92	5.40	6.58	7.82	9.54	5.57	7.64	11.07	5.66	8.13	12.26
	24	1.12	1.77	2.50	3.00	3.43	4.18	5.11	6.09	1.46	2.23	3.09	3.77	4.18	5.14	6.29	7.69	1.79	2.81	3.85	4.69	5.14	6.34	7.58	9.33	5.33	7.38	10.84	5.43	7.87	12.01
	12	1.16	1.76	2.44	2.77	3.26	3.75	4.91	5.64	1.46	2.17	2.96	3.41	3.91	4.54	5.76	6.65	1.79	2.69	3.63	4.19	4.77	5.57	6.92	8.03	4.92	6.50	9.36	5.03	7.08	10.61
12	16	1.03	1.62	2.28	2.64	3.09	3.61	4.75	5.51	1.32	2.02	2.79	3.27	3.73	4.39	5.60	6.51	1.63	2.53	3.46	4.03	4.58	5.41	6.75	7.88	4.74	6.32	9.20	4.87	6.89	10.43
	24	0.80	1.36	1.99	2.40	2.77	3.35	4.45	5.25	1.06	1.74	2.49	3.01	3.40	4.12	5.29	6.24	1.35	2.22	3.14	3.74	4.23	5.11	6.42	7.59	4.41	5.97	8.90	4.55	6.54	10.08
	12	0.90	1.41	1.99	2.22	2.65	2.96	4.07	4.44	1.14	1.75	2.42	2.71	3.20	3.57	4.80	5.25	1.43	2.19	3.00	3.32	3.94	4.39	5.81	6.37	3.92	5.15	7.51	4.29	5.83	8.56
14	16	0.75	1.25	1.80	2.08	2.45	2.80	3.87	4.29	0.98	1.58	2.23	2.55	2.99	3.41	4.60	5.09	1.25	2.00	2.80	3.14	3.72	4.21	5.60	6.20	3.71	4.95	7.32	4.08	5.61	8.35
	24	0.49	0.96	1.47	1.81	2.10	2.52	3.52	4.01	0.70	1.26	1.88	2.27	2.61	3.10	4.23	4.80	0.92	1.65	2.42	2.82	3.31	3.88	5.20	5.89	3.35	4.57	6.98	3.70	5.20	7.95
	12	0.65	1.08	1.54	1.74	2.07	2.30	3.24	3.47	0.84	1.35	1.90	2.12	2.52	2.78	3.87	4.12	1.07	1.71	2.39	2.60	3.14	3.42	4.73	5.03	3.07	4.04	5.96	3.50	4.65	6.82
16	16	0.50	0.91	1.35	1.59	1.86	2.14	3.04	3.31	0.68	1.17	1.70	1.96	2.30	2.61	3.65	3.96	0.89	1.51	2.17	2.41	2.91	3.24	4.49	4.85	2.86	3.82	5.76	3.27	4.41	6.59
	24	0.23	0.61	1.01	1.32	1.50	1.86	2.67	3.03	0.39	0.85	1.34	1.67	1.91	2.31	3.26	3.66	0.56	1.16	1.78	2.09	2.49	2.91	4.07	4.52	2.49	3.44	5.41	2.86	3.99	6.18

		550S137-mils (Fy)								550S162-mils (Fy)								550S200-mils (Fy)								550S250-mils (Fy)			550S300-mils (Fy)		
Wall Ht. (ft)	Spacing (in) o.c.	-33 (33)	-43 (33)	-54 (33)	-54 (50)	-68 (33)	-68 (50)	-97 (33)	-97 (50)	-33 (33)	-43 (33)	-54 (33)	-54 (50)	-68 (33)	-68 (50)	-97 (33)	-97 (50)	-33 (33)	-43 (33)	-54 (33)	-54 (50)	-68 (33)	-68 (50)	-97 (33)	-97 (50)	-54 (50)	-68 (50)	-97 (50)	-54 (50)	-68 (50)	-97 (50)
	12	1.78	2.52	3.38	3.86	4.52	5.10	6.81	7.53	2.39	3.38	4.52	5.63	6.03	7.45	9.25	11.32	2.80	4.19	5.59	7.20	7.47	9.62	11.64	15.02	7.41	10.66	17.47	7.70	10.82	18.64
8	16	1.73	2.49	3.34	3.83	4.48	5.07	6.77	7.50	2.34	3.33	4.47	5.58	5.99	7.41	9.20	11.28	2.74	4.14	5.54	7.14	7.42	9.56	11.58	14.97	7.36	10.60	17.42	7.64	10.76	18.58
	24	1.64	2.41	3.27	3.76	4.40	5.01	6.68	7.44	2.24	3.23	4.38	5.49	5.89	7.32	9.09	11.19	2.64	4.03	5.43	7.03	7.32	9.46	11.47	14.87	7.25	10.49	17.30	7.54	10.65	18.46
	12	1.74	2.49	3.35	3.83	4.48	5.07	6.77	7.50	2.32	3.31	4.46	5.55	5.99	7.41	9.20	11.27	2.72	4.09	5.47	7.02	7.34	9.39	11.44	14.69	7.25	10.41	17.04	7.53	10.59	18.18
9	16	1.68	2.44	3.30	3.79	4.43	5.03	6.72	7.46	2.26	3.24	4.40	5.49	5.93	7.35	9.13	11.22	2.66	4.02	5.41	6.94	7.27	9.32	11.36	14.62	7.18	10.34	16.96	7.46	10.51	18.10
	24	1.57	2.34	3.20	3.70	4.33	4.95	6.61	7.38	2.13	3.12	4.28	5.38	5.80	7.24	9.00	11.10	2.52	3.88	5.27	6.80	7.14	9.19	11.22	14.48	7.04	10.19	16.81	7.32	10.37	17.94
	12	1.69	2.45	3.31	3.80	4.44	5.04	6.72	7.47	2.25	3.22	4.36	5.41	5.93	7.35	9.14	11.22	2.64	3.97	5.34	6.80	7.17	9.12	11.19	14.28	7.05	10.13	16.52	7.33	10.34	17.65
10	16	1.62	2.38	3.24	3.74	4.38	4.98	6.65	7.41	2.16	3.14	4.29	5.34	5.85	7.27	9.05	11.14	2.55	3.88	5.25	6.71	7.09	9.03	11.10	14.19	6.97	10.03	16.42	7.24	10.25	17.54
	24	1.48	2.26	3.12	3.63	4.25	4.87	6.52	7.31	2.00	2.99	4.14	5.19	5.69	7.12	8.88	10.99	2.39	3.71	5.09	6.53	6.92	8.86	10.91	14.02	6.79	9.84	16.23	7.08	10.07	17.34
	12	1.58	2.34	3.20	3.70	4.33	4.94	6.60	7.37	2.05	3.00	4.11	5.04	5.61	6.87	8.96	11.04	2.43	3.68	4.99	6.24	6.75	8.43	10.56	13.23	6.59	9.43	15.25	6.85	9.76	16.38
12	16	1.48	2.25	3.11	3.61	4.23	4.86	6.49	7.29	1.93	2.89	3.99	4.93	5.50	6.76	8.82	10.91	2.31	3.55	4.87	6.11	6.62	8.30	10.42	13.10	6.46	9.29	15.11	6.73	9.62	16.23
	24	1.28	2.06	2.92	3.44	4.04	4.69	6.28	7.12	1.71	2.68	3.77	4.71	5.27	6.54	8.55	10.66	2.07	3.30	4.63	5.85	6.38	8.05	10.14	12.83	6.21	9.01	14.82	6.48	9.35	15.92
	12	1.43	2.21	3.06	3.57	4.18	4.80	6.43	7.23	1.81	2.72	3.76	4.54	5.18	6.23	8.30	10.00	2.16	3.31	4.56	5.56	6.21	7.56	9.75	11.91	6.10	8.62	13.73	6.28	9.05	14.93
14	16	1.29	2.07	2.92	3.44	4.04	4.68	6.27	7.10	1.66	2.57	3.61	4.39	5.02	6.07	8.10	9.83	2.01	3.14	4.39	5.38	6.03	7.39	9.55	11.72	5.92	8.42	13.53	6.11	8.86	14.71
	24	1.03	1.82	2.66	3.20	3.76	4.43	5.96	6.85	1.37	2.29	3.32	4.11	4.71	5.78	7.73	9.49	1.71	2.81	4.07	5.05	5.70	7.06	9.16	11.37	5.58	8.04	13.13	5.78	8.49	14.28
	12	1.21	1.95	2.79	3.23	3.94	4.55	6.18	7.01	1.53	2.39	3.35	3.95	4.66	5.45	7.47	8.76	1.87	2.90	4.06	4.80	5.58	6.59	8.80	10.42	5.48	7.65	12.05	5.63	8.23	13.39
16	16	1.04	1.78	2.62	3.07	3.75	4.38	5.95	6.82	1.35	2.20	3.16	3.77	4.45	5.26	7.22	8.54	1.68	2.69	3.85	4.59	5.36	6.38	8.54	10.19	5.25	7.40	11.79	5.42	7.98	13.10
	24	0.74	1.47	2.29	2.77	3.39	4.05	5.53	6.47	1.02	1.87	2.81	3.43	4.07	4.90	6.75	8.12	1.33	2.30	3.46	4.20	4.95	5.98	8.05	9.74	4.83	6.93	11.30	5.01	7.51	12.55

		600S137-mils (Fy)								600S162-mils (Fy)								600S200-mils (Fy)								600S250-mils (Fy)			600S300-mils (Fy)		
Wall Ht. (ft)	Spacing (in) o.c.	-33 (33)	-43 (33)	-54 (33)	-54 (50)	-68 (33)	-68 (50)	-97 (33)	-97 (50)	-33 (33)	-43 (33)	-54 (33)	-54 (50)	-68 (33)	-68 (50)	-97 (33)	-97 (50)	-33 (33)	-43 (33)	-54 (33)	-54 (50)	-68 (33)	-68 (50)	-97 (33)	-97 (50)	-54 (50)	-68 (50)	-97 (50)	-54 (50)	-68 (50)	-97 (50)
	12	1.77	2.51	3.37	3.81	4.53	5.05	6.90	7.54	2.42	3.40	4.53	5.61	6.07	7.45	9.39	11.39	2.86	4.31	5.74	7.46	7.70	9.97	12.07	15.65	7.64	11.05	18.28	7.94	11.19	19.51
8	16	1.73	2.47	3.33	3.78	4.49	5.02	6.87	7.52	2.37	3.35	4.49	5.57	6.03	7.41	9.35	11.35	2.81	4.26	5.70	7.41	7.65	9.93	12.02	15.60	7.59	11.00	18.22	7.89	11.14	19.45
	24	1.65	2.39	3.25	3.72	4.43	4.96	6.80	7.46	2.28	3.27	4.41	5.49	5.95	7.33	9.26	11.28	2.72	4.16	5.60	7.31	7.56	9.83	11.92	15.51	7.50	10.90	18.12	7.79	11.04	19.34
	12	1.74	2.47	3.33	3.78	4.50	5.02	6.87	7.52	2.38	3.36	4.49	5.57	6.03	7.41	9.35	11.35	2.80	4.23	5.65	7.31	7.59	9.79	11.92	15.39	7.51	10.85	17.92	7.80	11.00	19.12
9	16	1.69	2.43	3.28	3.74	4.45	4.98	6.82	7.48	2.32	3.30	4.44	5.52	5.98	7.36	9.29	11.31	2.74	4.16	5.59	7.25	7.53	9.73	11.85	15.33	7.44	10.78	17.85	7.73	10.93	19.04
	24	1.59	2.33	3.19	3.66	4.37	4.90	6.73	7.41	2.20	3.19	4.33	5.42	5.87	7.26	9.18	11.21	2.62	4.03	5.47	7.12	7.41	9.61	11.72	15.20	7.32	10.64	17.72	7.61	10.80	18.89
	12	1.70	2.44	3.29	3.75	4.46	4.99	6.83	7.49	2.33	3.31	4.45	5.53	5.99	7.37	9.30	11.31	2.73	4.13	5.54	7.14	7.45	9.58	11.72	15.07	7.35	10.60	17.49	7.63	10.77	18.66
10	16	1.63	2.37	3.23	3.70	4.41	4.94	6.77	7.44	2.25	3.24	4.38	5.46	5.92	7.30	9.23	11.25	2.65	4.05	5.46	7.05	7.38	9.50	11.64	14.99	7.27	10.52	17.40	7.55	10.69	18.56
	24	1.51	2.25	3.11	3.59	4.30	4.83	6.66	7.36	2.10	3.11	4.25	5.33	5.79	7.17	9.08	11.12	2.50	3.88	5.31	6.89	7.23	9.35	11.47	14.83	7.11	10.35	17.23	7.40	10.52	18.38
	12	1.60	2.34	3.20	3.66	4.37	4.90	6.73	7.41	2.17	3.15	4.31	5.35	5.87	7.25	9.17	11.19	2.55	3.88	5.25	6.67	7.10	9.00	11.21	14.21	6.94	10.00	16.41	7.22	10.24	17.55
12	16	1.51	2.25	3.11	3.59	4.29	4.82	6.64	7.34	2.06	3.05	4.20	5.25	5.77	7.15	9.05	11.09	2.44	3.76	5.14	6.55	6.99	8.89	11.08	14.09	6.82	9.87	16.28	7.10	10.12	17.41
	24	1.33	2.07	2.93	3.43	4.13	4.67	6.46	7.21	1.85	2.85	4.00	5.05	5.57	6.95	8.82	10.89	2.22	3.53	4.92	6.31	6.77	8.66	10.83	13.85	6.59	9.62	16.02	6.88	9.88	17.13
	12	1.48	2.22	3.07	3.55	4.26	4.79	6.60	7.31	1.95	2.91	4.02	4.93	5.55	6.77	8.96	10.96	2.32	3.56	4.88	6.07	6.64	8.26	10.52	13.08	6.46	9.26	15.07	6.71	9.62	16.23
14	16	1.36	2.09	2.94	3.44	4.14	4.67	6.47	7.20	1.81	2.78	3.88	4.80	5.41	6.63	8.78	10.80	2.17	3.40	4.72	5.91	6.48	8.10	10.34	12.91	6.29	9.08	14.88	6.56	9.45	16.02
	24	1.11	1.85	2.69	3.21	3.90	4.45	6.21	7.00	1.54	2.51	3.61	4.53	5.12	6.35	8.45	10.49	1.89	3.09	4.43	5.59	6.18	7.79	9.99	12.58	5.98	8.73	14.52	6.25	9.11	15.63
	12	1.34	2.07	2.91	3.40	4.10	4.63	6.41	7.15	1.71	2.62	3.67	4.41	5.10	6.10	8.26	9.89	2.05	3.18	4.43	5.38	6.09	7.38	9.69	11.74	5.96	8.44	13.53	6.13	8.89	14.77
16	16	1.18	1.90	2.74	3.24	3.94	4.46	6.22	7.00	1.53	2.45	3.49	4.24	4.91	5.91	8.03	9.68	1.87	2.98	4.24	5.18	5.88	7.17	9.45	11.52	5.75	8.21	13.29	5.93	8.66	14.50
	24	0.87	1.59	2.41	2.95	3.62	4.16	5.86	6.71	1.20	2.12	3.15	3.91	4.55	5.57	7.59	9.28	1.52	2.61	3.86	4.79	5.50	6.79	9.00	11.09	5.34	7.76	12.82	5.54	8.22	13.99

		800S137-mils (Fy)								800S162-mils (Fy)								800S200-mils (Fy)								800S250-mils (Fy)			800S300-mils (Fy)		
Wall Ht. (ft)	Spacing (in) o.c.	-33 (33)	-43 (33)	-54 (33)	-54 (50)	-68 (33)	-68 (50)	-97 (33)	-97 (50)	-33 (33)	-43 (33)	-54 (33)	-54 (50)	-68 (33)	-68 (50)	-97 (33)	-97 (50)	-33 (33)	-43 (33)	-54 (33)	-54 (50)	-68 (33)	-68 (50)	-97 (33)	-97 (50)	-54 (50)	-68 (50)	-97 (50)	-54 (50)	-68 (50)	-97 (50)
	12	1.71	2.43	3.27	3.57	4.42	4.74	6.91	7.21	2.39	3.35	4.49	5.43	6.05	7.25	9.57	11.25	2.97	4.47	5.94	7.74	7.95	10.29	12.51	15.98	8.17	11.80	19.77	8.51	12.06	21.55
8	16	1.68	2.40	3.24	3.55	4.39	4.72	6.89	7.19	2.36	3.32	4.46	5.40	6.02	7.22	9.54	11.23	2.93	4.44	5.91	7.71	7.92	10.25	12.48	15.95	8.14	11.76	19.73	8.47	12.03	21.51
	24	1.63	2.35	3.19	3.50	4.34	4.68	6.85	7.16	2.29	3.26	4.40	5.35	5.96	7.16	9.48	11.17	2.86	4.36	5.84	7.64	7.86	10.19	12.41	15.88	8.06	11.69	19.66	8.40	11.95	21.42
	12	1.69	2.40	3.25	3.55	4.39	4.73	6.89	7.20	2.37	3.33	4.46	5.41	6.02	7.22	9.54	11.23	2.94	4.44	5.91	7.71	7.93	10.26	12.48	15.95	8.10	11.72	19.65	8.44	11.97	21.36
9	16	1.65	2.37	3.21	3.52	4.36	4.70	6.87	7.17	2.32	3.29	4.42	5.37	5.98	7.19	9.51	11.20	2.89	4.39	5.87	7.67	7.88	10.21	12.44	15.91	8.06	11.68	19.60	8.39	11.92	21.30
	24	1.58	2.30	3.15	3.47	4.30	4.65	6.81	7.12	2.24	3.21	4.34	5.30	5.90	7.12	9.44	11.13	2.80	4.30	5.78	7.57	7.80	10.13	12.36	15.83	7.97	11.58	19.51	8.30	11.82	21.19
	12	1.66	2.38	3.22	3.53	4.37	4.71	6.87	7.18	2.33	3.30	4.43	5.38	5.99	7.19	9.52	11.20	2.90	4.41	5.88	7.68	7.89	10.22	12.45	15.92	8.02	11.63	19.51	8.34	11.85	21.12
10	16	1.62	2.34	3.18	3.49	4.33	4.67	6.84	7.15	2.28	3.25	4.38	5.33	5.94	7.15	9.47	11.16	2.85	4.35	5.83	7.62	7.84	10.17	12.40	15.87	7.97	11.57	19.45	8.29	11.79	21.05
	24	1.53	2.26	3.10	3.43	4.25	4.61	6.77	7.09	2.18	3.15	4.28	5.24	5.85	7.06	9.38	11.07	2.73	4.23	5.72	7.50	7.74	10.06	12.29	15.76	7.85	11.45	19.33	8.17	11.67	20.91
	12	1.60	2.32	3.16	3.48	4.31	4.66	6.82	7.13	2.26	3.22	4.36	5.31	5.92	7.13	9.45	11.14	2.82	4.32	5.80	7.59	7.81	10.14	12.37	15.84	7.81	11.39	19.12	8.11	11.53	20.49
12	16	1.54	2.26	3.10	3.43	4.25	4.61	6.77	7.09	2.18	3.15	4.29	5.24	5.85	7.06	9.38	11.07	2.74	4.23	5.72	7.50	7.74	10.06	12.29	15.76	7.73	11.29	19.03	8.03	11.44	20.39
	24	1.41	2.14	2.99	3.33	4.13	4.51	6.66	7.00	2.03	3.00	4.14	5.11	5.70	6.93	9.25	10.94	2.57	4.06	5.56	7.32	7.58	9.90	12.13	15.60	7.56	11.11	18.84	7.86	11.27	20.19
	12	1.53	2.25	3.09	3.42	4.24	4.60	6.75	7.08	2.17	3.13	4.27	5.22	5.83	7.04	9.36	11.05	2.69	4.16	5.65	7.36	7.68	9.96	12.26	15.72	7.52	10.99	18.47	7.80	11.12	19.66
14	16	1.44	2.16	3.01	3.35	4.16	4.53	6.68	7.01	2.06	3.03	4.17	5.13	5.73	6.94	9.26	10.95	2.58	4.04	5.53	7.24	7.57	9.84	12.14	15.61	7.40	10.86	18.34	7.69	10.99	19.52
	24	1.27	2.00	2.84	3.21	3.99	4.40	6.53	6.88	1.85	2.83	3.97	4.94	5.52	6.76	9.07	10.76	2.35	3.80	5.31	6.99	7.35	9.61	11.91	15.38	7.17	10.60	18.08	7.45	10.75	19.23
	12	1.44	2.16	3.00	3.34	4.15	4.52	6.67	7.00	2.06	3.02	4.16	5.11	5.71	6.93	9.25	10.93	2.52	3.93	5.39	6.95	7.37	9.45	11.90	15.15	7.15	10.42	17.49	7.43	10.60	18.65
16	16	1.32	2.05	2.89	3.25	4.04	4.43	6.57	6.91	1.92	2.89	4.02	4.98	5.57	6.80	9.11	10.80	2.37	3.77	5.24	6.78	7.22	9.30	11.75	15.00	6.99	10.25	17.32	7.27	10.44	18.45
	24	1.10	1.83	2.67	3.06	3.82	4.25	6.37	6.74	1.64	2.62	3.75	4.72	5.30	6.54	8.85	10.53	2.09	3.46	4.95	6.46	6.93	9.00	11.43	14.68	6.69	9.92	16.97	6.97	10.11	18.08

ALLOWABLE AXIAL LOAD TABLES

15 PSF LATERAL LOAD

Wall Ht. (ft)	Spacing (in) o.c.	350S137-mils (Fy)								350S162-mils (Fy)								350S200-mils (Fy)								350S250-mils (Fy)			350S300-mils (Fy)		
		-33 (33)	-43 (33)	-54 (33)	-54 (50)	-68 (33)	-68 (50)	-97 (33)	-97 (50)	-33 (33)	-43 (33)	-54 (33)	-54 (50)	-68 (33)	-68 (50)	-97 (33)	-97 (50)	-33 (33)	-43 (33)	-54 (33)	-54 (50)	-68 (33)	-68 (50)	-97 (33)	-97 (50)	-54 (50)	-68 (50)	-97 (50)	-54 (50)	-68 (50)	-97 (50)
	12	1.04	1.64	2.28	2.79	3.16	3.74	4.66	5.63	1.37	2.10	2.87	3.56	3.86	4.66	5.74	7.08	1.70	2.68	3.63	4.48	4.79	5.86	6.99	8.63	5.10	6.82	10.02	5.17	7.28	11.13
8	16	0.85	1.45	2.07	2.61	2.96	3.56	4.46	5.46	1.16	1.89	2.64	3.36	3.65	4.46	5.52	6.88	1.47	2.45	3.40	4.25	4.57	5.64	6.76	8.43	4.86	6.58	9.81	4.95	7.04	10.89
	24	0.50 7	1.07	1.67	2.27	2.59	3.21	4.07	5.12	0.78	1.49	2.21	2.99	3.25	4.08	5.10	6.51	1.05	2.00	2.94	3.82	4.14	5.22	6.32	8.03	4.40	6.12	9.39	4.50	6.57	10.43
	12	0.84	1.41	2.00	2.46	2.84	3.35	4.40	5.36	1.13	1.82	2.53	3.14	3.49	4.16	5.25	6.38	1.44	2.35	3.24	3.97	4.35	5.23	6.42	7.79	4.61	6.11	9.08	4.71	6.60	10.25
9	16	0.62 7	1.18	1.75	2.25	2.61	3.13	4.14	5.14	0.90	1.57	2.26	2.91	3.23	3.92	4.98	6.14	1.17	2.07	2.95	3.70	4.07	4.97	6.13	7.54	4.31	5.82	8.82	4.43	6.30	9.95
	24	0.23 6	0.75 6	1.28 7	1.86 7	2.16	2.71	3.65	4.71	0.46 6	1.11 7	1.76	2.48	2.76	3.48	4.47	5.70	0.68 7	1.56	2.41	3.20	3.56	4.48	5.59	7.07	3.77	5.27	8.32	3.90	5.74	9.38
	12	0.64 7	1.17	1.70	2.12	2.50	2.92	3.93	4.73	0.90	1.53	2.18	2.71	3.09	3.63	4.71	5.64	1.17	2.00	2.82	3.43	3.87	4.58	5.79	6.91	4.05	5.37	8.10	4.19	5.89	9.16
10	16	0.40 6	0.91 7	1.42	1.89	2.23	2.67	3.63	4.47	0.64 6	1.25	1.87	2.45	2.79	3.37	4.40	5.37	0.87 7	1.69	2.49	3.13	3.56	4.29	5.46	6.62	3.72	5.04	7.80	3.87	5.55	8.81
	24	0.00 3	0.44 6	0.91 6	1.46 6	1.74 7	2.21 7	3.07	4.00	0.17 6	0.74 6	1.32 7	1.99 7	2.26	2.88	3.81	4.87	0.34 6	1.13 6	1.90 7	2.59 7	2.98	3.75	4.84	6.09	3.11	4.43	7.23	3.27	4.91	8.17
	12	0.28 6	0.70 6	1.12 7	1.48 7	1.81	2.09	2.96	3.46	0.47 6	0.98 6	1.49 7	1.90 7	2.27	2.62	3.61	4.17	0.67 6	1.34 7	2.01	2.41	2.91	3.33	4.51	5.17	2.88	3.94	6.15	3.22	4.53	7.00
12	16	0.02 3	0.41 6	0.81 6	1.22 6	1.50 6	1.82 6	2.61	3.18	0.18 3	0.67 6	1.15 6	1.62 6	1.94 7	2.33 7	3.23	3.88	0.34 6	1.00 6	1.64 7	2.09 7	2.55	3.01	4.11	4.85	2.52	3.57	5.81	2.83	4.13	6.60
	24	0.00 2	0.00 3	0.26 3	0.77 3	0.96 6	1.34 6	1.99 6	2.68 6	0.00 2	0.13 3	0.56 3	1.13 3	1.35 6	1.81 6	2.57 6	3.34 6	0.00 3	0.40 3	0.99 6	1.53 6	1.90 6	2.44 6	3.39 7	4.27 7	1.89 6	2.92 6	5.18	2.15 6	3.41 7	5.87
	12	0.00 3	0.32 3	0.64 6	0.96 6	1.21 6	1.43 6	2.09 7	2.48 7	0.13 3	0.53 3	0.92 6	1.27 6	1.56 6	1.83 6	2.60	3.03	0.26 3	0.80 6	1.31 6	1.64 6	2.06 7	2.36 7	3.33	3.81	1.98 7	2.82	4.59	2.31 7	3.28	5.24
14	16	0.00 2	0.04 2	0.33 3	0.71 3	0.89 3	1.16 3	1.73 6	2.20 6	0.00 2	0.22 3	0.58 3	1.00 3	1.22 6	1.54 6	2.22 6	2.73 6	0.00 3	0.45 3	0.95 6	1.33 6	1.69 6	2.05 6	2.91 7	3.48 7	1.63 6	2.45 6	4.23	1.91 6	2.88 7	4.83
	24	0.00 2	0.00 2	0.00 2	0.28 2	0.36 2	0.70 2	1.12 3	1.71 3	0.00 2	0.00 2	0.00 2	0.53 2	0.63 3	1.04 3	1.56 6	2.21 6	0.00 2	0.00 2	0.32 3	0.79 3	1.04 3	1.49 3	2.19 6	2.91 6	1.02 3	1.82 6	3.60 6	1.22 3	2.16 6	4.10 6
	12	0.00 2	0.05 2	0.28 3	0.59 3	0.74 3	0.95 3	1.40 6	1.76 6	0.00 2	0.20 2	0.49 3	0.82 3	1.00 6	1.26 6	1.80 6	2.20 6	0.00 2	0.39 3	0.78 3	1.08 3	1.38 6	1.66 6	2.36 6	2.81 6	1.33 6	2.00 6	3.43 7	1.56 6	2.35 6	3.92
16	16	0.00 2	0.00 2	0.00 2	0.35 2	0.44 2	0.70 2	1.07 3	1.50 3	0.00 2	0.00 2	0.17 2	0.57 2	0.68 3	0.98 3	1.44 6	1.91 6	0.00 2	0.07 2	0.44 3	0.79 3	1.03 3	1.36 3	1.97 6	2.49 6	1.00 3	1.65 6	3.08 6	1.19 3	1.95 6	3.52 6
	24	0.00 1	0.00 1	0.00 2	0.00 2	0.00 2	0.26 2	0.50 2	1.05 2	0.00 1	0.00 2	0.00 2	0.13 2	0.13 2	0.51 2	0.82 3	1.42 3	0.00 1	0.00 2	0.00 2	0.29 2	0.42 2	0.84 2	1.28 3	1.95 3	0.42 2	1.04 3	2.47 3	0.53 2	1.28 3	2.81 6

Wall Ht. (ft)	Spacing (in) o.c.	362S137-mils (Fy)								362S162-mils (Fy)								362S200-mils (Fy)								362S250-mils (Fy)			362S300-mils (Fy)		
		-33 (33)	-43 (33)	-54 (33)	-54 (50)	-68 (33)	-68 (50)	-97 (33)	-97 (50)	-33 (33)	-43 (33)	-54 (33)	-54 (50)	-68 (33)	-68 (50)	-97 (33)	-97 (50)	-33 (33)	-43 (33)	-54 (33)	-54 (50)	-68 (33)	-68 (50)	-97 (33)	-97 (50)	-54 (50)	-68 (50)	-97 (50)	-54 (50)	-68 (50)	-97 (50)
	12	1.09	1.72	2.42	2.95	3.23	3.98	4.80	5.78	1.44	2.20	3.03	3.74	3.98	4.96	6.04	7.50	1.77	2.79	3.82	4.71	5.04	6.22	7.34	9.15	5.32	7.25	10.62	5.39	7.67	11.68
8	16	0.91	1.53	2.21	2.77	3.00	3.80	4.61	5.61	1.23	1.99	2.81	3.55	3.74	4.76	5.82	7.31	1.55	2.56	3.58	4.49	4.82	6.01	7.11	8.95	5.08	7.01	10.41	5.17	7.43	11.45
	24	0.56 7	1.16	1.81	2.43	2.57	3.44	4.23	5.30	0.85	1.59	2.37	3.17	3.29	4.38	5.40	6.93	1.13	2.13	3.12	4.06	4.39	5.58	6.67	8.55	4.62	6.53	9.99	4.73	6.96	10.99
	12	0.90	1.49	2.14	2.64	2.90	3.59	4.59	5.58	1.21	1.93	2.71	3.35	3.59	4.47	5.56	6.82	1.51	2.47	3.43	4.21	4.60	5.60	6.78	8.32	4.84	6.54	9.69	4.94	7.02	10.86
9	16	0.68	1.26	1.89	2.43	2.63	3.37	4.34	5.37	0.97	1.68	2.43	3.12	3.30	4.23	5.29	6.58	1.25	2.19	3.15	3.94	4.33	5.34	6.49	8.07	4.55	6.24	9.43	4.66	6.73	10.56
	24	0.28 6	0.83 7	1.41	2.03	2.12	2.94	3.86	4.95	0.53 6	1.21	1.92	2.68	2.76	3.77	4.78	6.13	0.77 7	1.68	2.61	3.44	3.82	4.84	5.95	7.59	4.00	5.68	8.92	4.13	6.16	9.99
	12	0.70 7	1.25	1.84	2.31	2.54	3.16	4.21	5.10	0.97	1.64	2.35	2.94	3.17	3.94	5.03	6.08	1.25	2.13	3.02	3.69	4.13	4.95	6.16	7.44	4.33	5.79	8.71	4.45	6.31	9.84
10	16	0.46 6	0.99 7	1.55	2.07	2.23	2.91	3.90	4.84	0.71 7	1.36	2.04	2.67	2.84	3.66	4.71	5.81	0.95	1.82	2.69	3.38	3.82	4.65	5.83	7.15	3.99	5.45	8.40	4.12	5.96	9.49
	24	0.02 3	0.51 6	1.03 6	1.62 6	1.66 7	2.44 7	3.34	4.35	0.23 6	0.84 6	1.47 7	2.18 7	2.23	3.15	4.12	5.30	0.42 6	1.25 7	2.09	2.83	3.23	4.09	5.20	6.60	3.37	4.82	7.82	3.51	5.31	8.83
	12	0.33 6	0.78 6	1.25 7	1.63 7	1.82	2.30	3.22	3.80	0.53 6	1.08 7	1.65	2.10	2.32	2.88	3.92	4.58	0.74 6	1.46	2.19	2.65	3.16	3.66	4.87	5.66	3.17	4.32	6.72	3.47	4.89	7.63
12	16	0.06 3	0.48 6	0.92 6	1.36 6	1.46 7	2.02 7	2.87	3.51	0.24 3	0.76 6	1.29 6	1.81 6	1.94 7	2.58 7	3.53	4.27	0.41 6	1.11 6	1.81 7	2.32 7	2.79	3.32	4.46	5.32	2.79	3.93	6.35	3.08	4.48	7.21
	24	0.00 2	0.00 3	0.35 3	0.89 3	0.83 6	1.51 6	2.22 6	2.99 6	0.00 2	0.20 3	0.67 6	1.29 6	1.27 6	2.03 6	2.85 7	3.70 7	0.00 3	0.49 6	1.14 6	1.73 6	2.12 6	2.72 6	3.72	4.72	2.12 6	3.25 7	5.69	2.37 6	3.73	6.45
	12	0.03 3	0.38 3	0.74 6	1.08 6	1.18 6	1.60 6	2.32 7	2.74 7	0.18 3	0.61 6	1.04 6	1.42 6	1.57 6	2.03 6	2.88	3.35	0.32 3	0.90 6	1.47 6	1.82 6	2.28 7	2.61 7	3.66	4.19	2.20 7	3.11	5.03	2.53 7	3.61	5.74
14	16	0.00 2	0.08 3	0.41 3	0.82 3	0.82 6	1.31 6	1.95 6	2.45 6	0.00 2	0.29 3	0.69 3	1.14 3	1.18 6	1.73 6	2.48 6	3.03 6	0.00 3	0.54 3	1.08 6	1.49 6	1.89 6	2.28 6	3.22 7	3.85 7	1.82 6	2.72 7	4.66	2.11 6	3.18 7	5.31
	24	0.00 2	0.00 2	0.00 2	0.35 2	0.19 3	0.82 3	1.31 3	1.94 3	0.00 2	0.00 2	0.08 2	0.64 2	0.51 3	1.19 3	1.79 6	2.48 6	0.00 2	0.00 2	0.42 3	0.92 3	1.21 3	1.69 3	2.47 6	3.24 6	1.17 3	2.05 6	3.99 6	1.39 3	2.43 6	4.54 7
	12	0.00 2	0.09 2	0.35 3	0.68 3	0.68 3	1.07 3	1.58 6	1.97 6	0.00 2	0.26 3	0.58 3	0.93 3	0.98 6	1.41 6	2.02 6	2.44 6	0.01 2	0.46 3	0.90 6	1.22 6	1.55 6	1.85 6	2.63 7	3.10 7	1.49 6	2.22 6	3.77	1.75 6	2.60 7	4.32
16	16	0.00 2	0.00 2	0.04 2	0.42 2	0.34 3	0.80 3	1.24 3	1.69 3	0.00 2	0.00 2	0.24 2	0.66 2	0.61 3	1.12 3	1.64 6	2.14 6	0.00 2	0.12 2	0.54 3	0.91 3	1.18 3	1.53 3	2.22 6	2.77 6	1.14 3	1.85 6	3.41 6	1.34 6	2.18 6	3.89 7
	24	0.00 1	0.00 1	0.00 2	0.00 2	0.00 2	0.34 2	0.64 2	1.21 2	0.00 1	0.00 2	0.00 2	0.19 2	0.00 2	0.62 2	0.99 3	1.62 3	0.00 1	0.00 2	0.00 2	0.38 2	0.54 2	0.97 2	1.49 3	2.20 3	0.53 2	1.21 3	2.77 6	0.66 3	1.47 3	3.14 6

Wall Ht. (ft)	Spacing (in) o.c.	400S137-mils (Fy)								400S162-mils (Fy)								400S200-mils (Fy)								400S250-mils (Fy)			400S300-mils (Fy)		
		-33 (33)	-43 (33)	-54 (33)	-54 (50)	-68 (33)	-68 (50)	-97 (33)	-97 (50)	-33 (33)	-43 (33)	-54 (33)	-54 (50)	-68 (33)	-68 (50)	-97 (33)	-97 (50)	-33 (33)	-43 (33)	-54 (33)	-54 (50)	-68 (33)	-68 (50)	-97 (33)	-97 (50)	-54 (50)	-68 (50)	-97 (50)	-54 (50)	-68 (50)	-97 (50)
	12	1.24	1.92	2.71	3.32	3.71	4.6	5.21	6.20	1.62	2.45	3.38	4.22	4.59	5.77	6.89	8.73	1.97	3.10	4.23	5.32	5.67	7.19	8.33	10.65	5.81	8.19	12.36	5.96	8.55	13.37
8	16	1.06	1.74	2.51	3.14	3.49	4.41	5.04	6.05	1.42	2.25	3.16	4.04	4.36	5.57	6.68	8.54	1.76	2.88	4.00	5.10	5.43	6.97	8.11	10.45	5.59	7.95	12.15	5.75	8.32	13.15
	24	0.72	1.38	2.12	2.81	3.07	4.06	4.70	5.77	1.05	1.86	2.75	3.67	3.91	5.18	6.27	8.17	1.35	2.46	3.57	4.68	4.97	6.55	7.69	10.06	5.16	7.49	11.73	5.32	7.87	12.70
	12	1.05	1.71	2.47	3.05	3.43	4.3	5.03	6.04	1.40	2.20	3.09	3.87	4.22	5.33	6.45	8.11	1.73	2.80	3.88	4.86	5.24	6.63	7.81	9.87	5.44	7.65	11.47	5.55	8.06	12.54
9	16	0.84	1.49	2.22	2.83	3.16	4.07	4.80	5.84	1.17	1.95	2.82	3.64	3.94	5.08	6.19	7.87	1.47	2.53	3.61	4.59	4.95	6.36	7.54	9.62	5.16	7.35	11.21	5.28	7.76	12.25
	24	0.44 7	1.06	1.75	2.43	2.64	3.63	4.36	5.47	0.73 7	1.49	2.32	3.20	3.39	4.61	5.68	7.41	0.99	2.03	3.08	4.09	4.38	5.84	7.01	9.14	4.62	6.78	10.70	4.76	7.19	11.68
	12	0.86	1.49	2.19	2.74	3.09	3.89	4.81	5.83	1.17	1.93	2.76	3.48	3.82	4.83	5.96	7.40	1.47	2.48	3.50	4.36	4.77	6.01	7.24	9.01	4.98	7.01	10.51	5.09	7.50	11.64
10	16	0.62 7	1.22	1.90	2.49	2.77	3.62	4.52	5.59	0.90	1.64	2.45	3.21	3.48	4.54	5.64	7.12	1.18	2.17	3.18	4.05	4.42	5.69	6.90	8.71	4.64	6.65	10.19	4.77	7.14	11.29
	24	0.17 6	0.74 6	1.36 7	2.03 7	2.17	3.11	3.98	5.12	0.41 6	1.12 7	1.87	2.70	2.85	3.99	5.04	6.58	0.64 7	1.59	2.57	3.47	3.75	5.09	6.27	8.14	4.02	5.98	9.59	4.16	6.46	10.61
	12	0.48 6	1.01 7	1.60	2.08	2.34	2.99	4.04	4.90	0.72 7	1.37	2.07	2.65	2.95	3.73	4.85	5.87	0.96 7	1.81	2.70	3.33	3.76	4.69	5.96	7.19	3.95	5.50	8.47	4.11	6.05	9.59
12	16	0.19 6	0.70 6	1.25 7	1.78 7	1.95	2.67	3.66	4.57	0.41 6	1.03 6	1.69 7	2.33 7	2.53	3.38	4.45	5.52	0.61 6	1.44 7	2.30	2.96	3.32	4.31	5.53	6.82	3.54	5.07	8.07	3.70	5.60	9.13
	24	0.00 3	0.14 3	0.63 6	1.25 6	1.26 6	2.09 6	2.97 7	3.98 7	0.00 3	0.43 6	1.03 6	1.75 6	1.80 6	2.76 6	3.72	4.88	0.00 3	0.78 6	1.58 6	2.31 6	2.53 7	3.62 7	4.74	6.14	2.80 7	4.29	7.33	2.96 7	4.78	8.28
	12	0.15 3	0.58 6	1.05 6	1.46 6	1.63 7	2.15 7	3.06	3.64	0.33 6	0.86 6	1.42 6	1.89 6	2.11	2.70	3.74	4.40	0.50 6	1.21 6	1.93 7	2.39 7	2.78	3.44	4.67	5.45	2.87	4.07	6.51	3.18	4.65	7.40
14	16	0.00 3	0.25 3	0.67 6	1.15 6	1.22 6	1.82 6	2.64 7	3.30 7	0.01 3	0.50 6	1.02 6	1.56 6	1.68 6	2.35 6	3.29	4.04	0.14 3	0.81 6	1.50 6	2.01 6	2.31 7	3.05 7	4.19	5.06	2.44 7	3.62	6.08	2.73 7	4.16	6.90
	24	0.00 2	0.00 2	0.03 3	0.62 3	0.50 3	1.24 3	1.92 6	2.70 6	0.00 2	0.00 3	0.33 3	0.98 3	0.92 6	1.72 6	2.52 6	3.40 6	0.00 2	0.13 3	0.76 3	1.36 3	1.49 6	2.36 6	3.34 6	4.37 6	1.69 6	2.83 6	5.31 7	1.92 6	3.29 6	6.01
	12	0.00 2	0.23 3	0.59 3	0.97 3	1.03 6	1.49 6	2.20 6	2.66 6	0.03 3	0.44 3	0.88 6	1.30 6	1.42 6	1.92 6	2.76 7	3.26 7	0.14 3	0.71 6	1.29 6	1.67 6	1.95 6	2.48 6	3.52	4.09	2.01 6	2.95 7	4.93	2.33 6	3.44	5.62
16	16	0.00 2	0.00 2	0.22 3	0.67 3	0.63 3	1.17 3	1.80 6	2.34 6	0.00 2	0.09 3	0.49 3	0.98 3	0.99 6	1.58 6	2.31 6	2.91 6	0.00 2	0.32 3	0.86 3	1.30 3	1.49 6	2.10 6	3.03 6	3.71 6	1.60 6	2.52 6	4.51 7	1.86 6	2.95 6	5.13
	24	0.00 1	0.00 2	0.00 2	0.16 2	0.00 2	0.62 2	1.10 3	1.77 3	0.00 2	0.00 2	0.00 2	0.42 2	0.25 3	0.98 3	1.55 3	2.30 3	0.00 2	0.00 2	0.14 2	0.68 2	0.69 3	1.45 3	2.20 6	3.04 6	0.89 3	1.77 3	3.76 6	1.07 3	2.11 6	4.26 6

Wall Ht. (ft)	Spacing (in) o.c.	550S137-mils (Fy)								550S162-mils (Fy)								550S200-mils (Fy)								550S250-mils (Fy)			550S300-mils (Fy)		
		-33 (33)	-43 (33)	-54 (33)	-54 (50)	-68 (33)	-68 (50)	-97 (33)	-97 (50)	-33 (33)	-43 (33)	-54 (33)	-54 (50)	-68 (33)	-68 (50)	-97 (33)	-97 (50)	-33 (33)	-43 (33)	-54 (33)	-54 (50)	-68 (33)	-68 (50)	-97 (33)	-97 (50)	-54 (50)	-68 (50)	-97 (50)	-54 (50)	-68 (50)	-97 (50)
	12	1.51	2.29	3.15	3.66	4.29	4.91	6.56	7.35	2.08	3.09	4.24	5.36	5.75	7.19	8.94	11.06	2.48	3.86	5.28	6.87	7.17	9.31	11.30	14.71	7.09	10.32	17.13	7.38	10.49	18.27
8	16	1.39	2.17	3.04	3.56	4.17	4.81	6.44	7.25	1.93	2.95	4.10	5.22	5.61	7.06	8.79	10.93	2.33	3.70	5.12	6.70	7.01	9.15	11.13	14.56	6.93	10.14	16.96	7.22	10.32	18.09
	24	1.13	1.94	2.81	3.36	3.94	4.62	6.20	7.07	1.64	2.68	3.83	4.96	5.34	6.80	8.49	10.67	2.02	3.38	4.82	6.38	6.71	8.85	10.79	14.25	6.62	9.80	16.62	6.91	10.00	17.72
	12	1.40	2.19	3.05	3.57	4.18	4.82	6.45	7.26	1.94	2.94	4.10	5.20	5.62	7.07	8.80	10.93	2.32	3.67	5.08	6.59	6.94	8.99	10.99	14.28	6.84	9.97	16.59	7.12	10.16	17.70
9	16	1.24	2.04	2.90	3.44	4.03	4.70	6.29	7.14	1.75	2.77	3.92	5.03	5.44	6.90	8.60	10.76	2.13	3.46	4.88	6.38	6.74	8.79	10.78	14.08	6.63	9.75	16.37	6.92	9.95	17.46
	24	0.93	1.75	2.62	3.19	3.74	4.45	5.98	6.90	1.38	2.42	3.58	4.69	5.09	6.56	8.21	10.42	1.75	3.06	4.50	5.97	6.36	8.40	10.34	13.68	6.24	9.32	15.93	6.53	9.53	16.99
	12	1.28	2.07	2.93	3.46	4.06	4.71	6.31	7.15	1.77	2.77	3.91	4.97	5.46	6.90	8.62	10.77	2.15	3.45	4.84	6.26	6.67	8.61	10.63	13.76	6.54	9.56	15.95	6.82	9.81	17.04
10	16	1.08	1.88	2.75	3.30	3.88	4.56	6.11	7.00	1.54	2.56	3.70	4.76	5.24	6.69	8.37	10.55	1.91	3.20	4.60	6.01	6.43	8.37	10.36	13.51	6.29	9.29	15.67	6.58	9.55	16.74
	24	0.70	1.53	2.39	2.98	3.51	4.25	5.72	6.69	1.10	2.14	3.27	4.34	4.79	6.26	7.88	10.11	1.46	2.71	4.13	5.51	5.96	7.89	9.82	13.01	5.80	8.76	15.13	6.09	9.03	16.15
	12	0.99	1.79	2.64	3.20	3.76	4.45	5.97	6.88	1.39	2.36	3.46	4.40	4.93	6.22	8.16	10.30	1.74	2.94	4.28	5.48	6.02	7.69	9.73	12.45	5.84	8.61	14.40	6.12	8.96	15.47
12	16	0.72	1.53	2.38	2.96	3.49	4.21	5.67	6.64	1.08	2.07	3.15	4.10	4.61	5.91	7.78	9.96	1.42	2.59	3.94	5.12	5.67	7.34	9.33	12.08	5.49	8.22	14.00	5.78	8.58	15.03
	24	0.22 6	1.04 7	1.88	2.51	2.97	3.76	5.10	6.18	0.52 7	1.51	2.57	3.54	3.99	5.32	7.05	9.29	0.83	1.94	3.31	4.45	5.01	6.68	8.57	11.37	4.82	7.47	13.22	5.11	7.85	14.19
	12	0.67 7	1.46	2.29	2.86	3.38	4.09	5.52	6.50	0.97	1.90	2.91	3.71	4.27	5.36	7.20	9.00	1.29	2.36	3.62	4.58	5.23	6.59	8.61	10.85	5.10	7.50	12.58	5.31	7.96	13.67
14	16	0.34 6	1.12 7	1.95	2.54	3.01	3.77	5.11	6.16	0.61 6	1.53	2.53	3.34	3.85	4.97	6.70	8.55	0.91 7	1.94	3.20	4.14	4.79	6.15	8.09	10.37	4.64	7.00	12.05	4.87	7.46	13.09
	24	0.00 3	0.52 6	1.31 6	1.95 6	2.34 7	3.16 7	4.34	5.52	0.00 6	0.87 6	1.82 7	2.66 7	3.09	4.24	5.78	7.72	0.21 6	1.17 6	2.43	3.35	3.97	5.35	7.12	9.48	3.81	6.07	11.06	4.04	6.53	12.02
	12	0.33 6	1.06 7	1.84	2.36	2.9	3.61	4.96	5.98	0.58 6	1.41 7	2.33	2.98	3.54	4.42	6.11	7.55	0.85 7	1.78	2.93	3.67	4.38	5.44	7.37	9.13	4.25	6.29	10.63	4.45	6.86	11.79
16	16	0.00 3	0.68 6	1.44 6	1.99 6	2.45 7	3.20 7	4.43	5.54	0.18 6	1.00 6	1.89 7	2.57 7	3.06	3.97	5.52	7.03	0.43 6	1.31 7	2.45	3.19	3.87	4.95	6.75	8.58	3.72	5.71	10.01	3.93	6.26	11.10
	24	0.00 2	0.01 3	0.72 6	1.33 6	1.66 6	2.49 6	3.49 7	4.74 7	0.00 3	0.28 3	1.11 6	1.83 6	2.20 6	3.18 6	4.48 7	6.10 7	0.00 3	0.48 6	1.59 6	2.33 6	2.94 7	4.06 7	5.64	7.58	2.79 6	4.68 7	8.91	2.99 7	5.18	9.85

Wall Ht. (ft)	Spacing (in) o.c.	600S137-mils (Fy)								600S162-mils (Fy)								600S200-mils (Fy)								600S250-mils (Fy)			600S300-mils (Fy)		
		-33 (33)	-43 (33)	-54 (33)	-54 (50)	-68 (33)	-68 (50)	-97 (33)	-97 (50)	-33 (33)	-43 (33)	-54 (33)	-54 (50)	-68 (33)	-68 (50)	-97 (33)	-97 (50)	-33 (33)	-43 (33)	-54 (33)	-54 (50)	-68 (33)	-68 (50)	-97 (33)	-97 (50)	-54 (50)	-68 (50)	-97 (50)	-54 (50)	-68 (50)	-97 (50)
	12	1.54	2.28	3.14	3.62	4.33	4.86	6.69	7.38	2.14	3.14	4.28	5.37	5.82	7.22	9.13	11.17	2.57	4.01	5.46	7.16	7.42	9.69	11.77	15.37	7.35	10.74	17.96	7.65	10.89	19.17
8	16	1.42	2.17	3.03	3.53	4.23	4.77	6.58	7.30	2.00	3.02	4.16	5.25	5.70	7.10	8.99	11.06	2.43	3.86	5.32	7.01	7.28	9.55	11.61	15.23	7.21	10.58	17.81	7.50	10.74	18.99
	24	1.19	1.95	2.81	3.34	4.03	4.58	6.37	7.14	1.73	2.77	3.92	5.02	5.46	6.87	8.73	10.83	2.15	3.56	5.04	6.71	7.00	9.27	11.31	14.95	6.92	10.27	17.50	7.22	10.44	18.66
	12	1.44	2.18	3.04	3.54	4.24	4.78	6.59	7.31	2.02	3.03	4.18	5.26	5.72	7.11	9.00	11.06	2.43	3.84	5.29	6.92	7.23	9.43	11.52	15.02	7.13	10.44	17.51	7.42	10.61	18.67
9	16	1.29	2.04	2.90	3.41	4.11	4.66	6.46	7.21	1.85	2.87	4.02	5.11	5.56	6.96	8.83	10.91	2.26	3.65	5.11	6.73	7.05	9.25	11.32	14.84	6.95	10.24	17.31	7.24	10.41	18.45
	24	1.01	1.76	2.62	3.17	3.86	4.42	6.18	7.00	1.51	2.56	3.71	4.81	5.25	6.67	8.49	10.62	1.90	3.27	4.76	6.35	6.70	8.89	10.93	14.48	6.58	9.84	16.91	6.88	10.03	18.02
	12	1.33	2.07	2.93	3.44	4.14	4.68	6.48	7.22	1.89	2.91	4.05	5.14	5.59	6.98	8.86	10.93	2.28	3.65	5.09	6.65	7.00	9.12	11.22	14.60	6.88	10.09	16.97	7.17	10.28	18.10
10	16	1.15	1.90	2.75	3.28	3.98	4.53	6.31	7.09	1.67	2.71	3.85	4.94	5.39	6.79	8.64	10.74	2.06	3.41	4.87	6.41	6.78	8.89	10.98	14.37	6.65	9.84	16.72	6.94	10.04	17.82
	24	0.80	1.55	2.41	2.98	3.66	4.23	5.96	6.83	1.26	2.32	3.47	4.57	5.00	6.42	8.21	10.37	1.63	2.96	4.43	5.94	6.34	8.45	10.49	13.91	6.20	9.35	16.22	6.49	9.56	17.28
	12	1.07	1.81	2.66	3.20	3.89	4.44	6.20	7.00	1.54	2.56	3.71	4.76	5.27	6.66	8.49	10.59	1.91	3.19	4.60	5.96	6.44	8.33	10.46	13.50	6.25	9.24	15.63	6.54	9.52	16.71
12	16	0.82	1.56	2.41	2.97	3.65	4.21	5.94	6.80	1.25	2.28	3.43	4.48	4.97	6.37	8.15	10.29	1.60	2.86	4.28	5.63	6.12	8.00	10.10	13.16	5.93	8.88	15.26	6.22	9.17	16.31
	24	0.35 7	1.08	1.91	2.54	3.19	3.78	5.43	6.41	0.70	1.75	2.88	3.94	4.41	5.82	7.51	9.73	1.03	2.24	3.68	4.98	5.50	7.37	9.40	12.50	5.29	8.18	14.53	5.59	8.49	15.52
	12	0.78	1.50	2.33	2.89	3.57	4.12	5.83	6.70	1.15	2.13	3.22	4.15	4.72	5.95	7.96	10.05	1.49	2.65	4.00	5.14	5.74	7.34	9.49	12.10	5.53	8.23	13.99	5.80	8.62	15.06
14	16	0.46 7	1.17	1.99	2.59	3.24	3.81	5.46	6.42	0.79	1.78	2.85	3.79	4.33	5.58	7.50	9.63	1.11	2.24	3.60	4.71	5.32	6.92	9.00	11.64	5.10	7.75	13.49	5.38	8.15	14.51
	24	0.00 6	0.57 6	1.36 7	2.02 7	2.63	3.22	4.77	5.87	0.14 6	1.12 7	2.17	3.11	3.60	4.87	6.62	8.83	0.42 6	1.48	2.84	3.92	4.53	6.13	8.08	10.77	4.30	6.85	12.53	4.57	7.26	13.48
	12	0.46 6	1.16	1.95	2.53	3.18	3.73	5.36	6.31	0.75 7	1.67	2.67	3.45	4.05	5.08	6.98	8.73	1.05	2.09	3.35	4.26	4.95	6.25	8.36	10.49	4.78	7.14	12.16	4.99	7.60	13.26
16	16	0.09 6	0.76 6	1.53 7	2.15 7	2.77	3.33	4.88	5.92	0.35 6	1.26 7	2.24	3.03	3.58	4.64	6.41	8.21	0.62 6	1.62	2.87	3.76	4.44	5.75	7.76	9.94	4.26	6.56	11.55	4.48	7.03	12.59
	24	0.00 3	0.05 6	0.78 6	1.47 6	2.02 6	2.61 6	4.01	5.21	0.00 3	0.51 6	1.45 6	2.28 6	2.73 7	3.82 7	5.37	7.28	0.00 6	0.76 6	2.00 7	2.88 7	3.52	4.84	6.66	8.92	3.32 7	5.51	10.43	3.54	5.96	11.34

Wall Ht. (ft)	Spacing (in) o.c.	800S137-mils (Fy)								800S162-mils (Fy)								800S200-mils (Fy)								800S250-mils (Fy)			800S300-mils (Fy)		
		-33 (33)	-43 (33)	-54 (33)	-54 (50)	-68 (33)	-68 (50)	-97 (33)	-97 (50)	-33 (33)	-43 (33)	-54 (33)	-54 (50)	-68 (33)	-68 (50)	-97 (33)	-97 (50)	-33 (33)	-43 (33)	-54 (33)	-54 (50)	-68 (33)	-68 (50)	-97 (33)	-97 (50)	-54 (50)	-68 (50)	-97 (50)	-54 (50)	-68 (50)	-97 (50)
	12	1.55	2.27	3.12	3.44	4.26	4.62	6.78	7.10	2.20	3.17	4.30	5.26	5.86	7.08	9.40	11.09	2.75	4.25	5.74	7.53	7.76	10.09	12.31	15.79	7.96	11.57	19.55	8.29	11.84	21.30
8	16	1.46	2.19	3.04	3.38	4.19	4.56	6.71	7.04	2.10	3.07	4.21	5.18	5.77	7.00	9.32	11.01	2.65	4.14	5.64	7.42	7.66	9.99	12.21	15.70	7.85	11.46	19.44	8.18	11.73	21.17
	24	1.30	2.03	2.89	3.25	4.04	4.44	6.58	6.93	1.90	2.89	4.03	5.01	5.59	6.83	9.15	10.85	2.44	3.93	5.44	7.21	7.47	9.80	12.02	15.51	7.63	11.23	19.21	7.97	11.50	20.92
	12	1.48	2.20	3.05	3.39	4.20	4.57	6.73	7.05	2.12	3.09	4.23	5.19	5.79	7.01	9.33	11.02	2.67	4.16	5.66	7.44	7.67	10.00	12.23	15.71	7.83	11.43	19.36	8.16	11.68	21.03
9	16	1.37	2.10	2.95	3.31	4.11	4.49	6.64	6.98	1.99	2.97	4.11	5.08	5.67	6.90	9.22	10.92	2.53	4.02	5.53	7.30	7.55	9.88	12.10	15.59	7.69	11.28	19.22	8.02	11.53	20.87
	24	1.17	1.91	2.76	3.14	3.91	4.34	6.47	6.83	1.75	2.73	3.88	4.87	5.44	6.69	9.01	10.71	2.27	3.74	5.27	7.02	7.30	9.63	11.85	15.35	7.42	10.99	18.93	7.74	11.25	20.55
	12	1.40	2.13	2.98	3.33	4.13	4.51	6.66	6.99	2.02	3.00	4.14	5.11	5.70	6.93	9.25	10.94	2.57	4.06	5.56	7.33	7.58	9.90	12.13	15.61	7.68	11.26	19.14	8.00	11.49	20.71
10	16	1.27	2.01	2.86	3.22	4.01	4.42	6.56	6.90	1.87	2.85	3.99	4.97	5.55	6.80	9.11	10.81	2.40	3.88	5.40	7.15	7.42	9.75	11.97	15.46	7.51	11.08	18.96	7.83	11.31	20.51
	24	1.02	1.76	2.62	3.02	3.77	4.22	6.35	6.72	1.57	2.56	3.70	4.70	5.26	6.53	8.84	10.55	2.07	3.54	5.08	6.81	7.11	9.43	11.65	15.16	7.17	10.71	18.60	7.48	10.95	20.10
	12	1.22	1.96	2.81	3.18	3.96	4.37	6.51	6.86	1.81	2.79	3.93	4.91	5.49	6.73	9.04	10.74	2.33	3.80	5.32	7.06	7.35	9.66	11.88	15.37	7.30	10.84	18.57	7.60	11.00	19.89
12	16	1.04	1.78	2.63	3.03	3.78	4.23	6.35	6.72	1.59	2.57	3.72	4.71	5.27	6.53	8.84	10.55	2.09	3.55	5.09	6.81	7.11	9.42	11.65	15.14	7.05	10.57	18.30	7.35	10.74	19.59
	24	0.68	1.43	2.29	2.74	3.44	3.95	6.04	6.45	1.16	2.15	3.30	4.31	4.85	6.14	8.44	10.16	1.63	3.05	4.63	6.30	6.66	8.95	11.17	14.68	6.56	10.03	17.76	6.86	10.22	18.99
	12	1.01	1.75	2.60	3.00	3.75	4.20	6.31	6.69	1.55	2.53	3.67	4.65	5.22	6.48	8.79	10.48	2.03	3.45	4.98	6.63	7.02	9.27	11.57	15.04	6.82	10.22	17.69	7.11	10.38	18.81
14	16	0.77	1.51	2.36	2.80	3.51	4.00	6.10	6.50	1.25	2.24	3.38	4.38	4.93	6.20	8.50	10.20	1.71	3.11	4.66	6.28	6.70	8.94	11.23	14.71	6.48	9.85	17.31	6.77	10.03	18.40
	24	0.29	1.04	1.89	2.40	3.04	3.61	5.67	6.12	0.69	1.68	2.81	3.84	4.35	5.66	7.95	9.65	1.10	2.46	4.04	5.59	6.07	8.29	10.57	14.05	5.82	9.12	16.56	6.11	9.32	17.58
	12	0.77	1.51	2.35	2.79	3.50	3.99	6.08	6.48	1.25	2.23	3.36	4.35	4.90	6.16	8.46	10.14	1.68	3.02	4.53	6.00	6.50	8.55	10.98	14.22	6.24	9.42	16.46	6.52	9.64	17.52
16	16	0.46	1.20	2.05	2.53	3.18	3.73	5.79	6.22	0.88	1.86	2.98	3.98	4.51	5.80	8.08	9.77	1.28	2.59	4.12	5.55	6.09	8.12	10.53	13.78	5.81	8.94	15.96	6.09	9.18	16.98
	24	0.00 6	0.61	1.45	2.02	2.57	3.22	5.22	5.73	0.19 7	1.15	2.26	3.29	3.76	5.09	7.35	9.03	0.54	1.79	3.33	4.71	5.29	7.30	9.66	12.92	4.98	8.03	15.00	5.26	8.28	15.93

ALLOWABLE AXIAL LOAD TABLES

20 PSF LATERAL LOAD

Wall Ht. (ft)	Spacing (in) o.c.	350S137-mils (Fy)								350S162-mils (Fy)								350S200-mils (Fy)								350S250-mils (Fy)			350S300-mils (Fy)		
		-33	-43	-54	-54	-68	-68	-97	-97	-33	-43	-54	-54	-68	-68	-97	-97	-33	-43	-54	-54	-68	-68	-97	-97	-54	-68	-97	-54	-68	-97
		(33)	(33)	(33)	(50)	(33)	(50)	(33)	(50)	(33)	(33)	(33)	(50)	(33)	(50)	(33)	(50)	(33)	(33)	(33)	(50)	(33)	(50)	(33)	(50)	(50)	(50)	(50)	(50)	(50)	(50)
	12	0.85	1.45	2.07	2.61	2.96	3.56	4.46	5.46	1.16	1.89	2.64	3.36	3.65	4.46	5.52	6.88	1.47	2.45	3.40	4.25	4.57	5.64	6.76	8.43	4.86	6.58	9.81	4.95	7.04	10.89
8	16	0.62	1.20	1.80	2.38	2.71	3.32	4.19	5.23	0.90	1.62	2.35	3.11	3.38	4.21	5.24	6.63	1.19	2.15	3.09	3.96	4.28	5.36	6.46	8.16	4.55	6.27	9.53	4.65	6.73	10.58
	24	0.18 6	0.73 7	1.30	1.96	2.23	2.87	3.69	4.80	0.43 6	1.11 7	1.81	2.64	2.87	3.72	4.69	6.15	0.66 7	1.59	2.51	3.42	3.73	4.83	5.89	7.66	3.96	5.67	9.00	4.08	6.12	9.98
	12	0.62 7	1.18	1.75	2.25	2.61	3.13	4.14	5.14	0.90	1.57	2.26	2.91	3.23	3.92	4.98	6.14	1.17	2.07	2.95	3.70	4.07	4.97	6.13	7.54	4.31	5.82	8.82	4.43	6.30	9.95
9	16	0.36 6	0.89 7	1.43	1.99	2.31	2.85	3.81	4.85	0.60 6	1.26	1.92	2.62	2.91	3.62	4.63	5.84	0.84 7	1.72	2.59	3.36	3.73	4.64	5.77	7.23	3.94	5.45	8.49	4.07	5.93	9.57
	24	0.00 3	0.36 6	0.86 6	1.51 6	1.76 7	2.33 7	3.19	4.31	0.07 6	0.69 6	1.30 7	2.08 7	2.31	3.06	3.98	5.28	0.25 6	1.09 6	1.92	2.75	3.08	4.03	5.08	6.63	3.26	4.75	7.85	3.40	5.21	8.84
	12	0.40 6	0.91 7	1.42	1.89	2.23	2.67	3.63	4.47	0.64 6	1.25	1.87	2.45	2.79	3.37	4.40	5.37	0.87 7	1.69	2.49	3.13	3.56	4.29	5.46	6.62	3.72	5.04	7.80	3.87	5.55	8.81
10	16	0.11 6	0.59 6	1.07 6	1.60 6	1.90 7	2.36 7	3.25	4.15	0.32 6	0.91 6	1.50 7	2.14 7	2.43	3.03	4.00	5.03	0.51 6	1.31 7	2.09	2.76	3.16	3.92	5.04	6.26	3.30	4.62	7.42	3.46	5.12	8.38
	24	0.00 3	0.02 3	0.45 6	1.08 6	1.29 6	1.80 6	2.57 7	3.56 7	0.00 3	0.29 6	0.83 6	1.56 6	1.77 6	2.43 6	3.27	4.41	0.00 3	0.63 6	1.37 6	2.10 6	2.45 7	3.26 7	4.26	5.60	2.56 7	3.87	6.70	2.72 7	4.33	7.56
	12	0.02 3	0.41 6	0.81 6	1.22 6	1.50 6	1.82 6	2.61	3.18	0.18 3	0.67 6	1.15 6	1.62 6	1.94 7	2.33 7	3.23	3.88	0.34 6	1.00 6	1.64 7	2.09 7	2.55	3.01	4.11	4.85	2.52	3.57	5.81	2.83	4.13	6.60
12	16	0.00 2	0.07 3	0.43 3	0.91 3	1.13 6	1.49 6	2.19 6	2.84 6	0.00 3	0.30 3	0.75 6	1.29 6	1.53 6	1.97 6	2.78 7	3.51 7	0.00 3	0.59 6	1.20 6	1.71 6	2.10 6	2.62 6	3.62	4.46	2.09 6	3.13 7	5.38	2.36 6	3.64	6.10
	24	0.00 2	0.00 2	0.00 2	0.38 2	0.48 3	0.91 3	1.44 6	2.23 6	0.00 2	0.00 2	0.04 3	0.70 3	0.82 3	1.35 3	1.99 6	2.86 6	0.00 2	0.00 3	0.43 3	1.04 3	1.33 6	1.94 6	2.75 6	3.75 6	1.33 6	2.35 6	4.61 7	1.54 6	2.76 6	5.21 7
	12	0.00 2	0.04 2	0.33 3	0.71 3	0.89 3	1.16 3	1.73 6	2.20 6	0.00 2	0.22 3	0.58 3	1.00 3	1.22 6	1.54 6	2.22 6	2.73 6	0.00 3	0.45 3	0.95 6	1.33 6	1.69 6	2.05 6	2.91 7	3.48 7	1.63 6	2.45 6	4.23	1.91 6	2.88 7	4.83
14	16	0.00 2	0.00 2	0.00 2	0.41 2	0.52 3	0.84 3	1.32 3	1.87 3	0.00 2	0.00 2	0.18 3	0.68 3	0.82 3	1.20 3	1.77 6	2.37 6	0.00 2	0.05 2	0.51 3	0.96 3	1.24 3	1.67 3	2.42 6	3.09 6	1.21 3	2.02 6	3.80 6	1.43 6	2.39 6	4.33 7
	24	0.00 1	0.00 1	0.00 2	0.00 2	0.00 2	0.29 2	0.60 2	1.29 2	0.00 1	0.00 2	0.00 2	0.13 2	0.13 2	0.60 2	0.99 3	1.75 3	0.00 2	0.00 2	0.00 2	0.33 2	0.48 2	1.01 2	1.56 3	2.41 3	0.49 2	1.26 3	3.04 6	0.62 3	1.54 3	3.45 6
	12	0.00 2	0.00 2	0.00 2	0.35 2	0.44 2	0.70 2	1.07 3	1.50 3	0.00 2	0.00 2	0.17 2	0.57 2	0.68 3	0.98 3	1.44 6	1.91 6	0.00 2	0.07 2	0.44 3	0.79 3	1.03 3	1.36 3	1.97 6	2.49 6	1.00 3	1.65 6	3.08 6	1.19 3	1.95 6	3.52 6
16	16	0.00 1	0.00 1	0.00 2	0.07 2	0.10 2	0.40 2	0.68 2	1.19 2	0.00 1	0.00 2	0.00 2	0.26 2	0.30 2	0.66 2	1.02 3	1.58 3	0.00 2	0.00 2	0.03 2	0.45 2	0.61 3	1.00 3	1.50 3	2.12 3	0.60 2	1.24 3	2.66 6	0.74 3	1.49 3	3.03 6
	24	0.00 1	0.00 1	0.00 1	0.00 1	0.00 1	0.00 1	0.02 2	0.66 2	0.00 1	0.00 1	0.00 1	0.00 1	0.00 2	0.11 2	0.30 2	0.99 2	0.00 1	0.00 1	0.00 2	0.00 2	0.00 2	0.39 2	0.70 2	1.48 2	0.00 2	0.53 2	1.95 3	0.00 2	0.69 2	2.20 3

Wall Ht. (ft)	Spacing (in) o.c.	362S137-mils (Fy)								362S162-mils (Fy)								362S200-mils (Fy)								362S250-mils (Fy)			362S300-mils (Fy)		
		-33	-43	-54	-54	-68	-68	-97	-97	-33	-43	-54	-54	-68	-68	-97	-97	-33	-43	-54	-54	-68	-68	-97	-97	-54	-68	-97	-54	-68	-97
		(33)	(33)	(33)	(50)	(33)	(50)	(33)	(50)	(33)	(33)	(33)	(50)	(33)	(50)	(33)	(50)	(33)	(33)	(33)	(50)	(33)	(50)	(33)	(50)	(50)	(50)	(50)	(50)	(50)	(50)
	12	0.91	1.53	2.21	2.77	3.00	3.80	4.61	5.61	1.23	1.99	2.81	3.55	3.74	4.76	5.82	7.31	1.55	2.56	3.58	4.49	4.82	6.01	7.11	8.95	5.08	7.01	10.41	5.17	7.43	11.45
8	16	0.67	1.28	1.94	2.54	2.71	3.56	4.36	5.40	0.98	1.72	2.52	3.30	3.44	4.50	5.54	7.06	1.27	2.27	3.27	4.20	4.53	5.72	6.81	8.68	4.77	6.69	10.13	4.87	7.11	11.14
	24	0.24 6	0.81 7	1.43	2.11	2.17	3.10	3.87	4.99	0.50 7	1.21	1.97	2.82	2.86	4.01	4.99	6.57	0.74 7	1.71	2.69	3.65	3.98	5.18	6.24	8.17	4.19	6.08	9.59	4.31	6.50	10.55
	12	0.68	1.26	1.89	2.43	2.63	3.37	4.34	5.37	0.97	1.68	2.43	3.12	3.30	4.23	5.29	6.58	1.25	2.19	3.15	3.94	4.33	5.34	6.49	8.07	4.55	6.24	9.43	4.66	6.73	10.56
9	16	0.41 6	0.97 7	1.57	2.16	2.28	3.08	4.01	5.09	0.67 7	1.36	2.09	2.82	2.94	3.92	4.94	6.28	0.92	1.85	2.78	3.60	3.99	5.00	6.13	7.75	4.18	5.86	9.09	4.30	6.34	10.18
	24	0.00 6	0.44 6	0.98 6	1.66 6	1.65 7	2.55 7	3.41	4.56	0.13 6	0.78 6	1.45 7	2.27 7	2.26	3.34	4.29	5.71	0.32 6	1.21 7	2.11	2.97	3.34	4.37	5.44	7.14	3.49	5.15	8.44	3.63	5.62	9.45
	12	0.46 6	0.99 7	1.55	2.07	2.23	2.91	3.90	4.84	0.71 7	1.36	2.04	2.67	2.84	3.66	4.71	5.81	0.95	1.82	2.69	3.38	3.82	4.65	5.83	7.15	3.99	5.45	8.40	4.12	5.96	9.49
10	16	0.16 6	0.66 6	1.20 7	1.77 7	1.84	2.59	3.52	4.51	0.38 6	1.01 6	1.65	2.34	2.43	3.32	4.31	5.46	0.59 6	1.43 7	2.28	3.00	3.42	4.27	5.40	6.78	3.57	5.02	8.01	3.71	5.52	9.04
	24	0.00 3	0.09 3	0.56 6	1.22 6	1.15 6	2.01 6	2.83 7	3.91 7	0.00 3	0.38 6	0.96 6	1.74 6	1.69 7	2.69 7	3.58	4.82	0.00 6	0.74 6	1.54 6	2.32 6	2.69 7	3.58 7	4.62	6.10	2.81 7	4.24	7.28	2.96	4.70	8.21
	12	0.06 3	0.48 6	0.92 6	1.36 6	1.46 7	2.02 7	2.87	3.51	0.24 3	0.76 6	1.29 6	1.81 6	1.94 7	2.58 7	3.53	4.27	0.41 6	1.11 6	1.81 7	2.32 7	2.79	3.32	4.46	5.32	2.79	3.93	6.35	3.08	4.48	7.21
12	16	0.00 2	0.13 3	0.53 6	1.04 6	1.03 6	1.67 6	2.43 6	3.15 6	0.00 3	0.38 3	0.87 6	1.45 6	1.48 6	2.20 6	3.07 7	3.88 7	0.01 3	0.69 6	1.36 6	1.92 6	2.33 7	2.91 7	3.96	4.91	2.33 6	3.47	5.91	2.59 7	3.97	6.70
	24	0.00 2	0.00 2	0.00 3	0.48 3	0.28 3	1.06 3	1.66 6	2.52 6	0.00 2	0.00 2	0.13 3	0.84 3	0.68 3	1.55 3	2.24 6	3.20 6	0.00 2	0.00 3	0.56 3	1.21 3	1.53 6	2.19 6	3.06 6	4.17 6	1.53 6	2.64 6	5.10 7	1.74 6	3.06 6	5.76
	12	0.00 2	0.08 3	0.41 3	0.82 3	0.82 6	1.31 6	1.95 6	2.45 6	0.00 2	0.29 3	0.69 3	1.14 3	1.18 6	1.73 6	2.48 6	3.03 6	0.00 3	0.54 3	1.08 6	1.49 6	1.89 6	2.28 6	3.22 7	3.85 7	1.82 6	2.72 7	4.66	2.11 6	3.18 7	5.31
14	16	0.00 2	0.00 2	0.02 2	0.50 2	0.39 3	0.97 3	1.51 6	2.10 6	0.00 2	0.00 2	0.27 3	0.79 3	0.73 3	1.36 3	2.01 6	2.66 6	0.00 2	0.12 3	0.63 3	1.10 3	1.42 6	1.88 6	2.71 6	3.44 6	1.38 6	2.26 6	4.20 7	1.62 6	2.67 6	4.78 7
	24	0.00 1	0.00 2	0.00 2	0.00 2	0.00 2	0.39 2	0.75 3	1.49 3	0.00 1	0.00 2	0.00 2	0.21 2	0.00 2	0.73 2	1.19 3	2.00 3	0.00 2	0.00 2	0.00 2	0.43 2	0.62 3	1.18 3	1.80 3	2.71 3	0.61 3	1.46 3	3.40 6	0.76 3	1.77 3	3.85 6
	12	0.00 2	0.00 2	0.04 2	0.42 2	0.34 3	0.80 3	1.24 3	1.69 3	0.00 2	0.00 2	0.24 2	0.66 2	0.61 3	1.12 3	1.64 6	2.14 6	0.00 2	0.12 2	0.54 3	0.91 3	1.18 3	1.53 3	2.22 6	2.77 6	1.14 3	1.85 6	3.41 6	1.34 6	2.18 6	3.89 7
16	16	0.00 1	0.00 2	0.00 2	0.13 2	0.00 2	0.49 2	0.82 3	1.36 3	0.00 1	0.00 2	0.00 2	0.34 2	0.18 2	0.77 2	1.19 3	1.78 3	0.00 2	0.00 2	0.11 2	0.54 2	0.74 3	1.15 3	1.72 3	2.38 3	0.72 3	1.41 3	2.97 6	0.87 3	1.69 3	3.38 6
	24	0.00 1	0.00 1	0.00 1	0.00 1	0.00 2	0.00 2	0.12 2	0.80 2	0.00 1	0.00 1	0.00 2	0.00 2	0.00 2	0.19 2	0.43 2	1.17 2	0.00 1	0.00 1	0.00 2	0.00 2	0.00 2	0.50 2	0.87 2	1.70 2	0.00 2	0.66 2	2.21 3	0.07 2	0.85 2	2.49 3

Wall Ht. (ft)	Spacing (in) o.c.	400S137-mils (Fy)								400S162-mils (Fy)								400S200-mils (Fy)								400S250-mils (Fy)			400S300-mils (Fy)		
		-33	-43	-54	-54	-68	-68	-97	-97	-33	-43	-54	-54	-68	-68	-97	-97	-33	-43	-54	-54	-68	-68	-97	-97	-54	-68	-97	-54	-68	-97
		(33)	(33)	(33)	(50)	(33)	(50)	(33)	(50)	(33)	(33)	(33)	(50)	(33)	(50)	(33)	(50)	(33)	(33)	(33)	(50)	(33)	(50)	(33)	(50)	(50)	(50)	(50)	(50)	(50)	(50)
	12	1.06	1.74	2.51	3.14	3.49	4.41	5.04	6.05	1.42	2.25	3.16	4.04	4.36	5.57	6.68	8.54	1.76	2.88	4.00	5.10	5.43	6.97	8.11	10.45	5.59	7.95	12.15	5.75	8.32	13.15
8	16	0.83	1.50	2.25	2.92	3.21	4.18	4.81	5.86	1.17	1.99	2.89	3.79	4.06	5.31	6.41	8.30	1.48	2.60	3.71	4.82	5.12	6.69	7.83	10.19	5.30	7.64	11.87	5.46	8.02	12.85
	24	0.40 7	1.04	1.75	2.50	2.67	3.72	4.36	5.49	0.70	1.50	2.35	3.32	3.48	4.81	5.88	7.82	0.97	2.06	3.15	4.28	4.52	6.14	7.27	9.68	4.74	7.04	11.33	4.92	7.43	12.26
	12	0.84	1.49	2.22	2.83	3.16	4.07	4.80	5.84	1.17	1.95	2.82	3.64	3.94	5.08	6.19	7.87	1.47	2.53	3.61	4.59	4.95	6.36	7.54	9.62	5.16	7.35	11.21	5.28	7.76	12.25
9	16	0.57 7	1.20	1.90	2.56	2.81	3.77	4.51	5.60	0.87	1.64	2.48	3.34	3.57	4.76	5.85	7.56	1.15	2.19	3.25	4.25	4.56	6.01	7.18	9.30	4.80	6.97	10.87	4.93	7.38	11.87
	24	0.07 6	0.67 6	1.31	2.06	2.16	3.21	3.94	5.12	0.33 6	1.07 7	1.85	2.78	2.88	4.16	5.20	6.98	0.55 7	1.56	2.58	3.61	3.84	5.35	6.50	8.67	4.12	6.24	10.20	4.27	6.65	11.14
	12	0.62 7	1.22	1.90	2.49	2.77	3.62	4.52	5.59	0.90	1.64	2.45	3.21	3.48	4.54	5.64	7.12	1.18	2.17	3.18	4.05	4.42	5.69	6.90	8.71	4.64	6.65	10.19	4.77	7.14	11.29
10	16	0.31 6	0.89 7	1.53	2.18	2.36	3.28	4.16	5.27	0.57 6	1.29	2.06	2.87	3.05	4.17	5.24	6.75	0.81 7	1.78	2.76	3.66	3.97	5.29	6.48	8.33	4.22	6.19	9.78	4.36	6.68	10.83
	24	0.00 3	0.30 6	0.87 6	1.61 6	1.63 7	2.65 7	3.47	4.68	0.00 6	0.64 6	1.35 7	2.24 7	2.27	3.48	4.48	6.08	0.15 6	1.07 6	2.01	2.94	3.14	4.54	5.68	7.61	3.44	5.35	9.01	3.60	5.82	9.97
	12	0.19 6	0.70 6	1.25 7	1.78 7	1.95	2.67	3.66	4.57	0.41 6	1.03 6	1.69 7	2.33 7	2.53	3.38	4.45	5.52	0.61 6	1.44 7	2.30	2.96	3.32	4.31	5.53	6.82	3.54	5.07	8.07	3.70	5.60	9.13
12	16	0.00 3	0.32 6	0.82 6	1.42 6	1.48 6	2.27 6	3.19	4.17	0.04 3	0.62 6	1.24 6	1.94 6	2.03 7	2.96 7	3.95	5.09	0.20 6	0.99 6	1.81 7	2.52 7	2.79	3.84	5.00	6.36	3.03	4.54	7.57	3.20	5.04	8.56
	24	0.00 2	0.00 3	0.08 3	0.79 3	0.65 6	1.58 6	2.35 6	3.45 6	0.00 2	0.00 3	0.43 3	1.25 3	1.15 6	2.20 6	3.06 6	4.32 6	0.00 3	0.20 3	0.95 6	1.73 6	1.84 6	3.00 6	4.04 7	5.52 7	2.14 6	3.59 7	6.66	2.30 6	4.04 7	7.51
	12	0.00 3	0.25 3	0.67 6	1.15 6	1.22 6	1.82 6	2.64 7	3.30 7	0.01 3	0.50 6	1.02 6	1.56 6	1.68 6	2.35 6	3.29	4.04	0.14 3	0.81 6	1.50 6	2.01 6	2.31 7	3.05 7	4.19	5.06	2.44 7	3.62	6.08	2.73 7	4.16	6.90
14	16	0.00 2	0.00 2	0.23 3	0.79 3	0.73 3	1.42 3	2.15 6	2.90 6	0.00 2	0.08 3	0.55 3	1.16 3	1.16 6	1.92 6	2.76 6	3.60 6	0.00 3	0.35 3	0.99 6	1.57 6	1.75 6	2.58 6	3.61 7	4.59 7	1.93 6	3.08 6	5.55	2.18 6	3.57 7	6.30
	24	0.00 2	0.00 2	0.00 2	0.16 2	0.00 2	0.73 2	1.29 3	2.19 3	0.00 2	0.00 2	0.00 2	0.48 2	0.26 3	1.18 3	1.83 6	2.84 6	0.00 2	0.00 2	0.11 3	0.79 3	0.78 3	1.76 3	2.60 6	3.75 6	1.04 3	2.15 6	4.63 6	1.22 3	2.54 6	5.22 6
	12	0.00 2	0.00 2	0.22 3	0.67 3	0.63 3	1.17 3	1.80 6	2.34 6	0.00 2	0.09 3	0.49 3	0.98 3	0.99 6	1.58 6	2.31 6	2.91 6	0.00 2	0.32 3	0.86 3	1.30 3	1.49 6	2.10 6	3.03 6	3.71 6	1.60 6	2.52 6	4.51 7	1.86 6	2.95 6	5.13
16	16	0.00 2	0.00 2	0.00 2	0.32 2	0.17 3	0.80 3	1.32 3	1.95 3	0.00 2	0.00 2	0.03 2	0.60 2	0.48 3	1.17 3	1.79 6	2.49 6	0.00 2	0.00 2	0.36 3	0.87 3	0.94 3	1.65 3	2.46 6	3.25 6	1.11 3	2.00 6	4.00 6	1.32 3	2.38 6	4.54 6
	24	0.00 1	0.00 1	0.00 2	0.00 2	0.00 2	0.15 2	0.49 2	1.29 2	0.00 1	0.00 2	0.00 2	0.00 2	0.00 2	0.48 2	0.90 3	1.77 3	0.00 1	0.00 2	0.00 2	0.14 2	0.01 2	0.89 2	1.48 3	2.46 3	0.27 2	1.12 3	3.11 3	0.38 2	1.39 3	3.50 6

Wall Ht. (ft)	Spacing (in) o.c.	550S137-mils (Fy)								550S162-mils (Fy)								550S200-mils (Fy)								550S250-mils (Fy)			550S300-mils (Fy)		
		-33	-43	-54	-54	-68	-68	-97	-97	-33	-43	-54	-54	-68	-68	-97	-97	-33	-43	-54	-54	-68	-68	-97	-97	-54	-68	-97	-54	-68	-97
		(33)	(33)	(33)	(50)	(33)	(50)	(33)	(50)	(33)	(33)	(33)	(50)	(33)	(50)	(33)	(50)	(33)	(33)	(33)	(50)	(33)	(50)	(33)	(50)	(50)	(50)	(50)	(50)	(50)	(50)
	12	1.39	2.17	3.04	3.56	4.17	4.81	6.44	7.25	1.93	2.95	4.10	5.22	5.61	7.06	8.79	10.93	2.33	3.70	5.12	6.70	7.01	9.15	11.13	14.56	6.93	10.14	16.96	7.22	10.32	18.09
8	16	1.22	2.02	2.89	3.43	4.02	4.69	6.28	7.13	1.74	2.77	3.92	5.05	5.43	6.89	8.59	10.76	2.12	3.48	4.92	6.49	6.81	8.95	10.90	14.35	6.72	9.92	16.73	7.01	10.11	17.84
	24	0.89	1.71	2.59	3.17	3.72	4.43	5.96	6.89	1.35	2.41	3.56	4.70	5.06	6.55	8.19	10.41	1.73	3.06	4.52	6.06	6.41	8.55	10.46	13.95	6.31	9.47	16.28	6.60	9.68	17.35
	12	1.24	2.04	2.90	3.44	4.03	4.70	6.29	7.14	1.75	2.77	3.92	5.03	5.44	6.90	8.60	10.76	2.13	3.46	4.88	6.38	6.74	8.79	10.78	14.08	6.63	9.75	16.37	6.92	9.95	17.46
9	16	1.03	1.84	2.71	3.27	3.84	4.53	6.08	6.98	1.50	2.54	3.69	4.80	5.20	6.67	8.34	10.53	1.88	3.19	4.63	6.11	6.49	8.53	10.49	13.81	6.37	9.46	16.08	6.66	9.67	17.14
	24	0.62	1.46	2.33	2.94	3.46	4.21	5.67	6.66	1.03	2.09	3.24	4.36	4.74	6.23	7.83	10.08	1.38	2.67	4.12	5.57	5.98	8.02	9.92	13.29	5.85	8.89	15.50	6.14	9.13	16.52
	12	1.08	1.88	2.75	3.30	3.88	4.56	6.11	7.00	1.54	2.56	3.70	4.76	5.24	6.69	8.37	10.55	1.91	3.20	4.60	6.01	6.43	8.37	10.36	13.51	6.29	9.29	15.67	6.58	9.55	16.74
10	16	0.83	1.64	2.51	3.09	3.63	4.35	5.85	6.80	1.24	2.28	3.41	4.48	4.94	6.40	8.04	10.26	1.60	2.87	4.29	5.67	6.11	8.05	10.00	13.17	5.96	8.93	15.31	6.25	9.20	16.34
	24	0.34	1.18	2.05	2.68	3.16	3.95	5.34	6.40	0.69	1.74	2.86	3.94	4.36	5.85	7.40	9.69	1.02	2.24	3.68	5.03	5.49	7.42	9.30	12.53	5.33	8.24	14.59	5.62	8.53	15.57
	12	0.72	1.53	2.38	2.96	3.49	4.21	5.67	6.64	1.08	2.07	3.15	4.10	4.61	5.91	7.78	9.96	1.42	2.59	3.94	5.12	5.67	7.34	9.33	12.08	5.49	8.22	14.00	5.78	8.58	15.03
12	16	0.38 7	1.20	2.05	2.65	3.14	3.91	5.29	6.33	0.70 7	1.69	2.76	3.72	4.19	5.51	7.29	9.51	1.02	2.15	3.51	4.67	5.23	6.89	8.82	11.60	5.04	7.71	13.47	5.33	8.09	14.47
	24	0.00 6	0.58 6	1.41 7	2.08 7	2.47	3.33	4.55	5.74	0.00 6	0.99 7	2.03	3.01	3.41	4.76	6.36	8.67	0.28 6	1.34 7	2.71	3.83	4.39	6.05	7.84	10.70	4.19	6.77	12.48	4.48	7.16	13.39
	12	0.34 6	1.12 7	1.95	2.54	3.01	3.77	5.11	6.16	0.61 6	1.53	2.53	3.34	3.85	4.97	6.70	8.55	0.91 7	1.94	3.20	4.14	4.79	6.15	8.09	10.37	4.64	7.00	12.05	4.87	7.46	13.09
14	16	0.00 6	0.71 6	1.52 7	2.14 7	2.55	3.36	4.59	5.73	0.17 6	1.08 6	2.05 7	2.88 7	3.34	4.48	6.08	7.99	0.44 6	1.42 7	2.68	3.60	4.23	5.61	7.43	9.77	4.08	6.37	11.38	4.31	6.83	12.37
	24	0.00 3	0.00 3	0.74 6	1.42 6	1.72 6	2.61 6	3.63 7	4.93 7	0.00 3	0.26 6	1.18 6	2.05 6	2.39 6	3.59 6	4.94	6.96	0.00 3	0.48 6	1.72 6	2.63 6	3.22 7	4.61 7	6.23	8.66	3.05 7	5.23	10.16	3.28 7	5.67	11.02
	12	0.00 3	0.68 6	1.44 6	1.99 6	2.45 7	3.20 7	4.43	5.54	0.18 6	1.00 6	1.89 7	2.57 7	3.06	3.97	5.52	7.03	0.43 6	1.31 7	2.45	3.19	3.87	4.95	6.75	8.58	3.72	5.71	10.01	3.93	6.26	11.10
16	16	0.00 3	0.22 3	0.95 6	1.54 6	1.91 6	2.72 6	3.79 7	4.99 7	0.00 3	0.51 6	1.35 6	2.07 6	2.47 6	3.43 6	4.81	6.40	0.00 3	0.74 6	1.86 6	2.60 6	3.24 7	4.34 7	6.00	7.90	3.09 7	5.01	9.26	3.29 7	5.53	10.25
	24	0.00 2	0.00 2	0.08 3	0.75 3	0.95 3	1.85 3	2.66 6	4.03 6	0.00 2	0.00 3	0.42 3	1.19 3	1.44 6	2.48 6	3.56 6	5.29 6	0.00 2	0.00 3	0.83 6	1.58 6	2.12 6	3.28 6	4.65 7	6.69 7	1.96 6	3.76 6	7.92	2.15 6	4.22 6	8.73

Wall Ht. (ft)	Spacing (in) o.c.	600S137-mils (Fy)								600S162-mils (Fy)								600S200-mils (Fy)								600S250-mils (Fy)			600S300-mils (Fy)		
		-33	-43	-54	-54	-68	-68	-97	-97	-33	-43	-54	-54	-68	-68	-97	-97	-33	-43	-54	-54	-68	-68	-97	-97	-54	-68	-97	-54	-68	-97
		(33)	(33)	(33)	(50)	(33)	(50)	(33)	(50)	(33)	(33)	(33)	(50)	(33)	(50)	(33)	(50)	(33)	(33)	(33)	(50)	(33)	(50)	(33)	(50)	(50)	(50)	(50)	(50)	(50)	(50)
	12	1.42	2.17	3.03	3.53	4.23	4.77	6.58	7.30	2.00	3.02	4.16	5.25	5.70	7.10	8.99	11.06	2.43	3.86	5.32	7.01	7.28	9.55	11.61	15.23	7.21	10.58	17.81	7.50	10.74	18.99
8	16	1.27	2.02	2.88	3.40	4.10	4.65	6.44	7.20	1.82	2.85	4.00	5.10	5.54	6.95	8.82	10.91	2.25	3.66	5.14	6.81	7.09	9.36	11.41	15.04	7.01	10.37	17.60	7.31	10.54	18.77
	24	0.97	1.73	2.59	3.15	3.83	4.40	6.16	6.99	1.47	2.53	3.68	4.79	5.22	6.65	8.47	10.61	1.88	3.27	4.77	6.42	6.73	9.00	11.01	14.67	6.63	9.96	17.19	6.93	10.14	18.32
	12	1.29	2.04	2.90	3.41	4.11	4.66	6.46	7.21	1.85	2.87	4.02	5.11	5.56	6.96	8.83	10.91	2.26	3.65	5.11	6.73	7.05	9.25	11.32	14.84	6.95	10.24	17.31	7.24	10.41	18.45
9	16	1.10	1.85	2.71	3.25	3.94	4.50	6.27	7.07	1.62	2.66	3.81	4.91	5.35	6.76	8.60	10.72	2.02	3.40	4.88	6.48	6.81	9.01	11.06	14.60	6.70	9.97	17.04	7.00	10.16	18.16
	24	0.73	1.48	2.34	2.93	3.61	4.18	5.91	6.80	1.18	2.25	3.40	4.51	4.94	6.38	8.15	10.34	1.56	2.91	4.41	5.98	6.35	8.54	10.55	14.12	6.22	9.45	16.51	6.52	9.65	17.59
	12	1.15	1.90	2.75	3.28	3.98	4.53	6.31	7.09	1.67	2.71	3.85	4.94	5.39	6.79	8.64	10.74	2.06	3.41	4.87	6.41	6.78	8.89	10.98	14.37	6.65	9.84	16.72	6.94	10.04	17.82
10	16	0.92	1.67	2.52	3.08	3.77	4.33	6.08	6.92	1.40	2.45	3.59	4.69	5.13	6.55	8.35	10.50	1.77	3.11	4.58	6.10	6.49	8.59	10.65	14.06	6.34	9.51	16.38	6.64	9.72	17.46
	24	0.47	1.22	2.07	2.69	3.35	3.94	5.63	6.58	0.86	1.94	3.09	4.20	4.62	6.06	7.79	10.01	1.22	2.51	4.01	5.49	5.92	8.01	10.01	13.47	5.75	8.86	15.72	6.05	9.10	16.74
	12	0.82	1.56	2.41	2.97	3.65	4.21	5.94	6.80	1.25	2.28	3.43	4.48	4.97	6.37	8.15	10.29	1.60	2.86	4.28	5.63	6.12	8.00	10.10	13.16	5.93	8.88	15.26	6.22	9.17	16.31
12	16	0.50	1.24	2.07	2.68	3.34	3.92	5.60	6.54	0.88	1.92	3.06	4.11	4.59	6.00	7.72	9.91	1.22	2.44	3.88	5.19	5.71	7.58	9.63	12.72	5.50	8.41	14.77	5.79	8.71	15.78
	24	0.00 6	0.63 7	1.45	2.13	2.75	3.36	4.94	6.03	0.19 6	1.24	2.36	3.43	3.87	5.30	6.90	9.18	0.50 7	1.66	3.11	4.37	4.91	6.77	8.72	11.86	4.69	7.51	13.82	4.98	7.83	14.75
	12	0.46 7	1.17	1.99	2.59	3.24	3.81	5.46	6.42	0.79	1.78	2.85	3.79	4.33	5.58	7.50	9.63	1.11	2.24	3.60	4.71	5.32	6.92	9.00	11.64	5.10	7.75	13.49	5.38	8.15	14.51
14	16	0.07 6	0.76 7	1.56	2.21	2.83	3.42	5.00	6.05	0.35 6	1.33 7	2.39	3.33	3.84	5.10	6.91	9.09	0.64 7	1.73	3.09	4.18	4.79	6.38	8.38	11.06	4.56	7.15	12.84	4.84	7.55	13.81
	24	0.00 3	0.01 6	0.77 6	1.50 6	2.07 7	2.68 7	4.12	5.35	0.00 6	0.52 6	1.53 6	2.49 6	2.92	4.21	5.81	8.09	0.00 6	0.79 6	2.14 7	3.19 7	3.79	5.39	7.22	9.97	3.56	6.02	11.64	3.82	6.43	12.50
	12	0.09 6	0.76 6	1.53 7	2.15 7	2.77	3.33	4.88	5.92	0.35 6	1.26 7	2.24	3.03	3.58	4.64	6.41	8.21	0.62 6	1.62	2.87	3.76	4.44	5.75	7.76	9.94	4.26	6.56	11.55	4.48	7.03	12.59
16	16	0.00 3	0.28 6	1.02 6	1.69 6	2.26 7	2.84 7	4.29	5.44	0.00 6	0.75 6	1.70 6	2.52 6	3.00	4.08	5.70	7.58	0.10 6	1.04 6	2.28 7	3.16 7	3.82	5.13	7.01	9.25	3.62	5.84	10.79	3.84	6.30	11.74
	24	0.00 2	0.00 3	0.10 3	0.85 3	1.35 6	1.95 6	3.23 6	4.56 6	0.00 3	0.00 3	0.74 6	1.60 6	1.96 6	3.09 6	4.44 7	6.44 7	0.00 3	0.01 6	1.22 6	2.09 6	2.68 6	4.03 6	5.66	8.00	2.47 6	4.57 7	9.40	2.69 6	4.99 7	10.20

Wall Ht. (ft)	Spacing (in) o.c.	800S137-mils (Fy)								800S162-mils (Fy)								800S200-mils (Fy)								800S250-mils (Fy)			800S300-mils (Fy)		
		-33	-43	-54	-54	-68	-68	-97	-97	-33	-43	-54	-54	-68	-68	-97	-97	-33	-43	-54	-54	-68	-68	-97	-97	-54	-68	-97	-54	-68	-97
		(33)	(33)	(33)	(50)	(33)	(50)	(33)	(50)	(33)	(33)	(33)	(50)	(33)	(50)	(33)	(50)	(33)	(33)	(33)	(50)	(33)	(50)	(33)	(50)	(50)	(50)	(50)	(50)	(50)	(50)
	12	1.46	2.19	3.04	3.38	4.19	4.56	6.71	7.04	2.10	3.07	4.21	5.18	5.77	7.00	9.32	11.01	2.65	4.14	5.64	7.42	7.66	9.99	12.21	15.70	7.85	11.46	19.44	8.18	11.73	21.17
8	16	1.35	2.09	2.94	3.29	4.09	4.48	6.63	6.97	1.97	2.95	4.09	5.06	5.65	6.89	9.20	10.91	2.51	4.00	5.51	7.28	7.53	9.86	12.08	15.57	7.70	11.31	19.29	8.04	11.58	21.00
	24	1.14	1.88	2.74	3.12	3.89	4.32	6.45	6.81	1.71	2.70	3.85	4.84	5.41	6.67	8.98	10.69	2.23	3.71	5.24	6.99	7.27	9.60	11.82	15.33	7.42	11.00	18.99	7.75	11.28	20.67
	12	1.37	2.10	2.95	3.31	4.11	4.49	6.64	6.98	1.99	2.97	4.11	5.08	5.67	6.90	9.22	10.92	2.53	4.02	5.53	7.30	7.55	9.88	12.10	15.59	7.69	11.28	19.22	8.02	11.53	20.87
9	16	1.24	1.97	2.83	3.20	3.98	4.39	6.53	6.88	1.83	2.81	3.95	4.94	5.52	6.76	9.08	10.78	2.36	3.84	5.36	7.11	7.38	9.71	11.93	15.43	7.51	11.09	19.03	7.83	11.34	20.65
	24	0.96	1.71	2.57	2.98	3.72	4.18	6.30	6.68	1.50	2.50	3.65	4.65	5.21	6.48	8.79	10.51	2.01	3.47	5.02	6.75	7.05	9.38	11.59	15.11	7.14	10.70	18.65	7.47	10.96	20.22
	12	1.27	2.01	2.86	3.22	4.01	4.42	6.56	6.90	1.87	2.85	3.99	4.97	5.55	6.80	9.11	10.81	2.40	3.88	5.40	7.15	7.42	9.75	11.97	15.46	7.51	11.08	18.96	7.83	11.31	20.51
10	16	1.10	1.84	2.70	3.09	3.85	4.29	6.42	6.78	1.67	2.65	3.80	4.79	5.36	6.62	8.93	10.64	2.18	3.65	5.19	6.92	7.21	9.54	11.76	15.26	7.28	10.84	18.72	7.60	11.07	20.24
	24	0.77	1.52	2.38	2.83	3.54	4.03	6.14	6.54	1.27	2.27	3.42	4.43	4.98	6.27	8.57	10.29	1.75	3.20	4.77	6.47	6.80	9.12	11.33	14.85	6.83	10.35	18.24	7.14	10.60	19.70
	12	1.04	1.78	2.63	3.03	3.78	4.23	6.35	6.72	1.59	2.57	3.72	4.71	5.27	6.53	8.84	10.55	2.09	3.55	5.09	6.81	7.11	9.42	11.65	15.14	7.05	10.57	18.30	7.35	10.74	19.59
12	16	0.80	1.54	2.40	2.84	3.55	4.04	6.15	6.54	1.30	2.29	3.44	4.44	4.99	6.27	8.58	10.29	1.78	3.22	4.78	6.47	6.81	9.11	11.33	14.83	6.73	10.21	17.94	7.02	10.39	19.19
	24	0.33	1.09	1.95	2.46	3.10	3.67	5.74	6.19	0.74	1.74	2.89	3.93	4.44	5.76	8.05	9.77	1.17	2.57	4.17	5.81	6.21	8.49	10.70	14.22	6.08	9.50	17.23	6.38	9.71	18.41
	12	0.77	1.51	2.36	2.80	3.51	4.00	6.10	6.50	1.25	2.24	3.38	4.38	4.93	6.20	8.50	10.20	1.71	3.11	4.66	6.28	6.70	8.94	11.23	14.71	6.48	9.85	17.31	6.77	10.03	18.40
14	16	0.45	1.19	2.05	2.54	3.19	3.74	5.81	6.25	0.87	1.86	3.00	4.02	4.54	5.84	8.13	9.84	1.30	2.67	4.24	5.82	6.28	8.50	10.79	14.27	6.04	9.36	16.81	6.33	9.56	17.85
	24	0.00 7	0.59	1.44	2.02	2.58	3.24	5.25	5.76	0.15 7	1.14	2.26	3.32	3.79	5.14	7.41	9.12	0.52	1.83	3.44	4.94	5.46	7.66	9.92	13.41	5.18	8.42	15.84	5.47	8.64	16.79
	12	0.46	1.20	2.05	2.53	3.18	3.73	5.79	6.22	0.88	1.86	2.98	3.98	4.51	5.80	8.08	9.77	1.28	2.59	4.12	5.55	6.09	8.12	10.53	13.78	5.81	8.94	15.96	6.09	9.18	16.98
16	16	0.07 7	0.80	1.64	2.18	2.77	3.39	5.41	5.89	0.41 7	1.38	2.50	3.52	4.01	5.32	7.59	9.27	0.78	2.05	3.59	4.98	5.55	7.57	9.94	13.20	5.25	8.33	15.31	5.53	8.58	16.28
	24	0.00 6	0.06 6	0.88 7	1.53 7	1.99	2.73	4.67	5.24	0.00 6	0.49 7	1.58	2.63	3.05	4.42	6.64	8.33	0.00 6	1.03	2.59	3.91	4.53	6.52	8.83	12.09	4.19	7.15	14.08	4.46	7.43	14.93

TELLING

ALLOWABLE AXIAL LOAD TABLES

25 PSF LATERAL LOAD

Wall Ht. (ft)	Spacing (in) o.c	350S137-mils (Fy)								350S162-mils (Fy)								350S200-mils (Fy)								350S250-mils (Fy)			350S300-mils (Fy)		
		-33	-43	-54	-54	-68	-68	-97	-97	-33	-43	-54	-54	-68	-68	-97	-97	-33	-43	-54	-54	-68	-68	-97	-97	-54	-68	-97	-54	-68	-97
		(33)	(33)	(33)	(50)	(33)	(50)	(33)	(50)	(33)	(33)	(33)	(50)	(33)	(50)	(33)	(50)	(33)	(33)	(33)	(50)	(33)	(50)	(33)	(50)	(50)	(50)	(50)	(50)	(50)	(50)
	12	0.67	1.26	1.87	2.44	2.77	3.38	4.26	5.29	0.97	1.68	2.43	3.17	3.45	4.27	5.31	6.69	1.26	2.22	3.16	4.04	4.35	5.43	6.54	8.23	4.62	6.35	9.60	4.72	6.80	10.66
8	16	0.39 6	0.96	1.54	2.17	2.47	3.09	3.94	5.02	0.66 7	1.36	2.08	2.87	3.12	3.96	4.96	6.39	0.91	1.86	2.79	3.69	4.00	5.09	6.17	7.91	4.25	5.96	9.26	4.36	6.42	10.28
	24	0.00 6	0.40 6	0.94 7	1.66 7	1.90	2.56	3.33	4.50	0.09 6	0.76 6	1.43 7	2.30 7	2.51	3.38	4.30	5.81	0.29 6	1.20 7	2.10	3.03	3.34	4.45	5.47	7.29	3.54	5.24	8.61	3.67	5.69	9.55
	12	0.42 6	0.96 7	1.51	2.06	2.38	2.91	3.89	4.92	0.67 7	1.33	2.01	2.69	2.99	3.70	4.72	5.92	0.92	1.81	2.68	3.45	3.81	4.72	5.86	7.30	4.03	5.54	8.57	4.16	6.02	9.66
9	16	0.11 6	0.61 6	1.14 7	1.74 7	2.02	2.58	3.50	4.58	0.33 6	0.96 7	1.60	2.34	2.61	3.34	4.30	5.56	0.53 6	1.40 7	2.25	3.05	3.40	4.33	5.42	6.92	3.59	5.09	8.16	3.73	5.56	9.20
	24	0.00 3	0.00 3	0.46 6	1.17 6	1.37 6	1.97 6	2.76 7	3.94 7	0.00 3	0.29 6	0.88 6	1.71 6	1.90 7	2.68 7	3.53	4.88	0.00 6	0.66 6	1.46 6	2.32 6	2.63	3.60	4.59	6.20	2.79 7	4.27	7.40	2.93	4.71	8.33
	12	0.18 6	0.66 6	1.15 7	1.67 7	1.98	2.43	3.35	4.23	0.39 6	0.99 6	1.59	2.21	2.52	3.11	4.10	5.11	0.60 6	1.40 7	2.19	2.85	3.26	4.01	5.14	6.35	3.40	4.73	7.51	3.56	5.22	8.48
10	16	0.00 3	0.29 6	0.75 6	1.33 6	1.58 6	2.07 6	2.90	3.85	0.02 3	0.59 6	1.15 6	1.84 6	2.09 7	2.72 7	3.63	4.71	0.18 6	0.96 6	1.72 7	2.42 7	2.80	3.58	4.64	5.92	2.92	4.24	7.05	3.08	4.71	7.96
	24	0.00 2	0.00 3	0.03 3	0.72 3	0.87 6	1.42 6	2.10 6	3.16 6	0.00 2	0.00 3	0.37 6	1.17 6	1.32 6	2.02 6	2.78 6	3.98 6	0.00 3	0.17 3	0.88 6	1.65 6	1.96 6	2.80 6	3.72 7	5.14 7	2.05 6	3.35 7	6.21	2.21 6	3.78 7	6.99
	12	0.00 2	0.15 3	0.52 6	0.99 6	1.22 6	1.57 6	2.29 6	2.92 6	0.00 3	0.39 3	0.84 6	1.37 6	1.63 6	2.06 6	2.89 7	3.60 7	0.05 3	0.68 6	1.30 6	1.80 6	2.21 7	2.72 7	3.74	4.55	2.19 6	3.24 7	5.48	2.48 7	3.76	6.22
12	16	0.00 2	0.00 2	0.09 3	0.64 3	0.79 3	1.19 3	1.80 6	2.53 6	0.00 2	0.00 3	0.38 3	0.99 3	1.17 6	1.65 6	2.37 6	3.18 6	0.00 2	0.22 3	0.80 6	1.37 6	1.70 6	2.27 6	3.17 7	4.09 7	1.69 6	2.72 6	4.98	1.94 6	3.18 7	5.64
	24	0.00 1	0.00 2	0.00 2	0.02 2	0.05 2	0.53 2	0.95 3	1.83 3	0.00 2	0.00 2	0.00 2	0.32 2	0.36 3	0.94 3	1.45 3	2.43 3	0.00 2	0.00 2	0.00 3	0.60 3	0.81 3	1.48 3	2.18 6	3.28 6	0.83 3	1.82 3	4.08 6	0.99 3	2.18 6	4.61 6
	12	0.00 2	0.00 2	0.05 2	0.49 2	0.61 3	0.92 3	1.42 6	1.95 6	0.00 2	0.00 2	0.28 3	0.76 3	0.91 3	1.28 3	1.88 6	2.46 6	0.00 2	0.15 3	0.62 3	1.05 3	1.35 6	1.76 6	2.54 6	3.19 6	1.31 6	2.12 6	3.91 7	1.55 6	2.50 6	4.45 7
14	16	0.00 1	0.00 2	0.00 2	0.15 2	0.20 2	0.56 2	0.94 3	1.57 3	0.00 2	0.00 2	0.00 2	0.39 2	0.46 3	0.89 3	1.37 3	2.05 3	0.00 2	0.00 2	0.12 2	0.63 2	0.84 3	1.32 3	1.97 6	2.74 6	0.83 3	1.62 3	3.41 6	1.01 3	1.94 6	3.87 6
	24	0.00 1	0.00 1	0.00 1	0.00 1	0.00 2	0.00 2	0.13 2	0.91 2	0.00 1	0.00 1	0.00 2	0.00 2	0.00 2	0.21 2	0.48 2	1.34 2	0.00 1	0.00 2	0.00 2	0.00 2	0.00 2	0.58 2	0.99 3	1.95 3	0.01 2	0.77 2	2.54 3	0.09 2	0.98 3	2.86 3
	12	0.00 1	0.00 2	0.00 2	0.14 2	0.18 2	0.47 2	0.77 3	1.26 3	0.00 1	0.00 2	0.00 2	0.34 2	0.39 2	0.73 2	1.12 3	1.66 3	0.00 2	0.00 2	0.13 2	0.53 2	0.71 3	1.09 3	1.61 3	2.21 3	0.70 3	1.33 3	2.76 6	0.84 3	1.60 3	3.15 6
16	16	0.00 1	0.00 1	0.00 1	0.00 1	0.00 2	0.13 2	0.34 2	0.91 2	0.00 1	0.00 1	0.00 2	0.00 2	0.00 2	0.37 2	0.64 2	1.27 2	0.00 1	0.00 2	0.00 2	0.14 2	0.24 2	0.68 2	1.08 3	1.79 3	0.25 2	0.87 2	2.29 3	0.34 2	1.07 3	2.60 3
	24	0.00 1	0.00 1	0.00 1	0.00 1	0.00 1	0.00 1	0.00 2	0.31 2	0.00 1	0.00 1	0.00 1	0.00 1	0.00 1	0.00 1	0.00 2	0.61 2	0.00 1	0.00 1	0.00 1	0.00 1	0.00 2	0.00 2	0.17 2	1.06 2	0.00 2	0.07 2	1.47 2	0.00 2	0.17 2	1.64 2

Wall Ht. (ft)	Spacing (in) o.c.	362S137-mils (Fy)								362S162-mils (Fy)								362S200-mils (Fy)								362S250-mils (Fy)			362S300-mils (Fy)		
		-33	-43	-54	-54	-68	-68	-97	-97	-33	-43	-54	-54	-68	-68	-97	-97	-33	-43	-54	-54	-68	-68	-97	-97	-54	-68	-97	-54	-68	-97
		(33)	(33)	(33)	(50)	(33)	(50)	(33)	(50)	(33)	(33)	(33)	(50)	(33)	(50)	(33)	(50)	(33)	(33)	(33)	(50)	(33)	(50)	(33)	(50)	(50)	(50)	(50)	(50)	(50)	(50)
	12	0.73	1.34	2.01	2.60	2.79	3.61	4.42	5.45	1.04	1.78	2.59	3.36	3.51	4.57	5.61	7.12	1.34	2.34	3.35	4.27	4.60	5.79	6.89	8.75	4.85	6.77	10.20	4.95	7.19	11.22
8	16	0.45 7	1.04	1.68	2.32	2.44	3.33	4.11	5.19	0.73	1.46	2.24	3.05	3.14	4.25	5.26	6.81	1.00	1.99	2.98	3.92	4.25	5.45	6.52	8.42	4.48	6.38	9.86	4.59	6.80	10.84
	24	0.00 6	0.49 6	1.07 7	1.81 7	1.78	2.78	3.52	4.69	0.16 6	0.86 7	1.58	2.48	2.45	3.66	4.60	6.23	0.37 6	1.33	2.28	3.26	3.59	4.79	5.83	7.80	3.77	5.65	9.20	3.90	6.07	10.11
	12	0.48 6	1.04	1.65	2.23	2.37	3.15	4.09	5.15	0.74 7	1.44	2.17	2.89	3.03	3.99	5.03	6.35	1.00	1.93	2.87	3.68	4.07	5.08	6.22	7.83	4.27	5.96	9.17	4.39	6.44	10.28
9	16	0.16 6	0.70 6	1.27 7	1.90 7	1.96	2.81	3.70	4.82	0.39 6	1.06 7	1.76	2.54	2.59	3.62	4.61	5.99	0.61 6	1.52	2.43	3.28	3.65	4.68	5.78	7.44	3.82	5.50	8.76	3.96	5.97	9.81
	24	0.00 3	0.07 6	0.58 6	1.32 6	1.21 6	2.18 6	2.98	4.19	0.00 3	0.39 6	1.02 6	1.89 6	1.80 7	2.94 7	3.83	5.30	0.00 6	0.78 6	1.64 7	2.54 7	2.88	3.93	4.95	6.71	3.01	4.65	7.98	3.16	5.11	8.93
	12	0.23 6	0.74 6	1.28 7	1.84 7	1.94	2.67	3.61	4.59	0.46 6	1.09 7	1.75	2.42	2.53	3.40	4.41	5.55	0.68 6	1.53	2.38	3.10	3.51	4.36	5.51	6.87	3.67	5.13	8.11	3.81	5.63	9.15
10	16	0.00 3	0.37 6	0.86 6	1.49 6	1.48 7	2.29 7	3.16	4.20	0.08 6	0.68 6	1.30 6	2.03 6	2.05	2.99	3.93	5.13	0.25 6	1.07 6	1.90 7	2.65 7	3.04	3.91	5.00	6.43	3.18	4.62	7.64	3.32	5.10	8.62
	24	0.00 2	0.00 3	0.12 3	0.85 3	0.67 6	1.61 6	2.35 6	3.49 6	0.00 3	0.00 3	0.50 6	1.34 6	1.18 6	2.26 6	3.07 7	4.38 7	0.00 3	0.27 6	1.03 6	1.86 6	2.19 6	3.11 6	4.07	5.62	2.28 6	3.71 7	6.77	2.44 6	4.14	7.62
	12	0.00 3	0.21 3	0.62 6	1.12 6	1.13 6	1.75 6	2.54 7	3.24 7	0.00 3	0.47 6	0.97 6	1.54 6	1.59 6	2.29 6	3.18	3.98	0.11 3	0.79 6	1.47 6	2.01 6	2.44 7	3.01 7	4.08	5.01	2.44 7	3.58	6.02	2.71 7	4.09	6.82
12	16	0.00 2	0.00 3	0.17 3	0.75 3	0.64 6	1.36 6	2.03 6	2.82 6	0.00 2	0.03 3	0.49 3	1.13 3	1.06 6	1.86 6	2.64 6	3.53 6	0.00 3	0.30 3	0.94 6	1.55 6	1.91 6	2.53 6	3.50 7	4.53 7	1.92 6	3.04 6	5.49	2.15 6	3.50 7	6.21
	24	0.00 2	0.00 2	0.00 2	0.10 2	0.00 3	0.66 3	1.15 3	2.09 3	0.00 2	0.00 2	0.00 2	0.43 2	0.15 3	1.11 3	1.69 6	2.74 6	0.00 2	0.00 2	0.03 3	0.75 3	0.99 3	1.70 3	2.47 6	3.67 6	1.00 3	2.09 6	4.55 6	1.17 3	2.46 6	5.13 7
	12	0.00 2	0.00 2	0.11 3	0.58 3	0.49 3	1.06 3	1.62 6	2.18 6	0.00 2	0.00 2	0.37 3	0.87 3	0.84 3	1.45 3	2.12 6	2.75 6	0.00 2	0.22 3	0.74 3	1.20 3	1.53 6	1.97 6	2.83 6	3.53 6	1.48 6	2.37 6	4.31 7	1.73 6	2.79 6	4.91
14	16	0.00 1	0.00 2	0.00 2	0.22 2	0.01 2	0.67 2	1.12 3	1.79 3	0.00 2	0.00 2	0.00 2	0.48 2	0.32 3	1.04 3	1.58 3	2.31 3	0.00 2	0.00 2	0.22 3	0.75 3	1.01 3	1.51 3	2.23 6	3.06 6	0.98 3	1.84 6	3.79 6	1.17 3	2.20 6	4.30 6
	24	0.00 1	0.00 1	0.00 2	0.00 2	0.00 2	0.01 2	0.26 2	1.09 2	0.00 1	0.00 1	0.00 2	0.00 2	0.00 2	0.32 2	0.65 2	1.56 2	0.00 1	0.00 2	0.00 2	0.00 2	0.10 2	0.72 2	1.21 3	2.23 3	0.11 2	0.93 3	2.88 3	0.20 2	1.18 3	3.24 6
	12	0.00 1	0.00 2	0.00 2	0.20 2	0.04 2	0.56 2	0.92 3	1.44 3	0.00 2	0.00 2	0.00 2	0.41 2	0.29 2	0.86 2	1.30 3	1.87 3	0.00 2	0.00 2	0.21 2	0.63 2	0.84 3	1.24 3	1.84 6	2.47 6	0.82 3	1.51 3	3.07 6	0.98 3	1.81 6	3.50 6
16	16	0.00 1	0.00 1	0.00 2	0.00 2	0.00 2	0.20 2	0.46 2	1.07 2	0.00 1	0.00 1	0.00 2	0.05 2	0.00 2	0.47 2	0.79 2	1.46 2	0.00 1	0.00 2	0.00 2	0.22 2	0.35 2	0.81 2	1.28 3	2.02 3	0.34 2	1.02 3	2.57 3	0.45 2	1.25 3	2.92 6
	24	0.00 1	0.00 1	0.00 1	0.00 1	0.00 1	0.00 1	0.00 2	0.43 2	0.00 1	0.00 1	0.00 1	0.00 1	0.00 1	0.00 1	0.00 2	0.77 2	0.00 1	0.00 1	0.00 1	0.00 1	0.00 2	0.08 2	0.32 2	1.25 2	0.00 2	0.17 2	1.71 2	0.00 2	0.30 2	1.91 3

Wall Ht. (ft)	Spacing (in) o.c.	400S137-mils (Fy)								400S162-mils (Fy)								400S200-mils (Fy)								400S250-mils (Fy)			400S300-mils (Fy)		
		-33	-43	-54	-54	-68	-68	-97	-97	-33	-43	-54	-54	-68	-68	-97	-97	-33	-43	-54	-54	-68	-68	-97	-97	-54	-68	-97	-54	-68	-97
		(33)	(33)	(33)	(50)	(33)	(50)	(33)	(50)	(33)	(33)	(33)	(50)	(33)	(50)	(33)	(50)	(33)	(33)	(33)	(50)	(33)	(50)	(33)	(50)	(50)	(50)	(50)	(50)	(50)	(50)
	12	0.89	1.56	2.31	2.98	3.28	4.24	4.87	5.91	1.23	2.05	2.95	3.85	4.13	5.37	6.47	8.36	1.55	2.67	3.78	4.89	5.20	6.76	7.90	10.25	5.37	7.72	11.94	5.53	8.09	12.92
8	16	0.61	1.27	2.00	2.71	2.94	3.94	4.58	5.68	0.93	1.74	2.61	3.55	3.76	5.06	6.14	8.05	1.22	2.32	3.43	4.55	4.81	6.41	7.55	9.93	5.02	7.34	11.60	5.19	7.72	12.55
	24	0.10 6	0.72 7	1.40	2.19	2.28	3.39	4.04	5.22	0.37 7	1.15	1.97	2.98	3.06	4.45	5.49	7.47	0.60 7	1.67	2.75	3.89	4.08	5.75	6.87	9.31	4.34	6.61	10.94	4.52	7.00	11.83
	12	0.64	1.27	1.98	2.63	2.90	3.84	4.58	5.66	0.94	1.72	2.56	3.41	3.66	4.84	5.93	7.64	1.23	2.28	3.34	4.34	4.66	6.10	7.27	9.38	4.89	7.06	10.95	5.02	7.47	11.96
9	16	0.32 6	0.93 7	1.60	2.31	2.48	3.49	4.22	5.35	0.59 7	1.35	2.16	3.06	3.22	4.45	5.52	7.26	0.84	1.87	2.91	3.92	4.19	5.68	6.84	8.98	4.45	6.60	10.53	4.60	7.01	11.50
	24	0.00 6	0.29 6	0.90 6	1.70 6	1.71 7	2.82 7	3.54	4.78	0.00 6	0.66 6	1.41 7	2.39 7	2.39	3.73	4.74	6.56	0.14 6	1.12 7	2.11	3.16	3.32	4.89	6.01	8.23	3.64	5.72	9.73	3.80	6.13	10.62
	12	0.39 6	0.97 7	1.62	2.26	2.46	3.36	4.25	5.35	0.65 7	1.38	2.15	2.95	3.16	4.26	5.34	6.84	0.90	1.87	2.86	3.75	4.08	5.39	6.58	8.42	4.32	6.31	9.88	4.46	6.79	10.95
10	16	0.03 6	0.59 6	1.19 7	1.89 7	1.99	2.95	3.81	4.97	0.26 6	0.96 7	1.69	2.54	2.65	3.82	4.85	6.41	0.47 6	1.41 7	2.37	3.29	3.54	4.91	6.07	7.96	3.82	5.76	9.39	3.97	6.24	10.39
	24	0.00 3	0.00 3	0.41 6	1.22 6	1.12 6	2.21 6	3.00 7	4.27 7	0.00 3	0.20 6	0.86 6	1.81 6	1.73 7	3.01 7	3.95	5.60	0.00 6	0.58 6	1.48 6	2.45 6	2.57 7	4.03 7	5.12	7.10	2.90 7	4.77	8.47	3.06	5.22	9.36
	12	0.00 3	0.41 6	0.93 6	1.51 6	1.59 7	2.37 7	3.30	4.26	0.13 6	0.72 6	1.35 6	2.03 6	2.15 7	3.06 7	4.07	5.19	0.30 6	1.10 6	1.93 7	2.62 7	2.92	3.95	5.13	6.47	3.16	4.66	7.69	3.32	5.18	8.70
12	16	0.00 2	0.00 3	0.44 6	1.09 6	1.05 6	1.91 6	2.75 7	3.79 7	0.00 3	0.25 3	0.82 6	1.58 6	1.57 6	2.56 6	3.49 7	4.69 7	0.00 3	0.58 6	1.36 6	2.11 6	2.29 7	3.41 7	4.50	5.93	2.57 6	4.05	7.10	2.74 7	4.53	8.02
	24	0.00 2	0.00 2	0.00 3	0.37 3	0.10 3	1.11 3	1.79 6	2.96 6	0.00 2	0.00 2	0.00 3	0.78 3	0.55 3	1.70 3	2.46 6	3.79 6	0.00 2	0.00 3	0.37 3	1.20 3	1.20 6	2.45 6	3.39 6	4.96 6	1.54 6	2.95 6	6.04 7	1.69 6	3.36 6	6.79
	12	0.00 2	0.00 3	0.34 3	0.87 3	0.85 6	1.52 6	2.27 6	2.99 6	0.00 2	0.18 3	0.66 6	1.26 6	1.28 6	2.02 6	2.89 6	3.71 6	0.00 3	0.46 3	1.11 6	1.67 6	1.89 6	2.69 6	3.75 7	4.70 7	2.05 6	3.21 7	5.68	2.31 6	3.71 7	6.44
14	16	0.00 2	0.00 2	0.00 2	0.46 2	0.29 3	1.06 3	1.70 6	2.53 6	0.00 2	0.00 2	0.12 3	0.81 3	0.69 3	1.54 3	2.28 6	3.20 6	0.00 2	0.00 3	0.53 3	1.16 3	1.25 6	2.15 6	3.09 6	4.15 6	1.47 6	2.60 6	5.07 7	1.68 6	3.03 6	5.74 7
	24	0.00 1	0.00 2	0.00 2	0.00 2	0.00 2	0.28 2	0.72 3	1.72 3	0.00 1	0.00 2	0.00 2	0.03 2	0.00 2	0.70 2	1.22 3	2.33 3	0.00 2	0.00 2	0.00 2	0.28 2	0.15 3	1.23 3	1.93 3	3.20 3	0.46 3	1.53 3	4.01 6	0.59 3	1.86 3	4.51 6
	12	0.00 2	0.00 2	0.00 2	0.40 2	0.28 3	0.89 3	1.43 3	2.05 3	0.00 2	0.00 2	0.14 3	0.68 3	0.60 3	1.27 3	1.91 6	2.59 6	0.00 2	0.00 2	0.48 3	0.97 3	1.07 3	1.76 3	2.60 6	3.36 6	1.23 3	2.13 6	4.12 6	1.45 3	2.51 6	4.68 7
16	16	0.00 1	0.00 2	0.00 2	0.00 2	0.00 2	0.46 2	0.89 3	1.61 3	0.00 1	0.00 2	0.00 2	0.25 2	0.03 2	0.81 2	1.32 3	2.12 3	0.00 2	0.00 2	0.00 2	0.49 2	0.45 3	1.26 3	1.95 3	2.84 3	0.67 3	1.54 3	3.54 6	0.83 3	1.86 3	4.00 6
	24	0.00 1	0.00 1	0.00 1	0.00 1	0.00 2	0.00 2	0.00 2	0.85 2	0.00 1	0.00 1	0.00 2	0.00 2	0.00 2	0.02 2	0.31 2	1.30 2	0.00 1	0.00 1	0.00 2	0.00 2	0.00 2	0.39 2	0.83 2	1.93 2	0.00 2	0.55 2	2.53 3	0.00 2	0.74 2	2.83 3

Wall Ht. (ft)	Spacing (in) o.c.	550S137-mils (Fy)								550S162-mils (Fy)								550S200-mils (Fy)								550S250-mils (Fy)			550S300-mils (Fy)		
		-33	-43	-54	-54	-68	-68	-97	-97	-33	-43	-54	-54	-68	-68	-97	-97	-33	-43	-54	-54	-68	-68	-97	-97	-54	-68	-97	-54	-68	-97
		(33)	(33)	(33)	(50)	(33)	(50)	(33)	(50)	(33)	(33)	(33)	(50)	(33)	(50)	(33)	(50)	(33)	(33)	(33)	(50)	(33)	(50)	(33)	(50)	(50)	(50)	(50)	(50)	(50)	(50)
	12	1.26	2.06	2.92	3.46	4.06	4.72	6.32	7.16	1.79	2.82	3.97	5.09	5.47	6.93	8.64	10.80	2.17	3.54	4.97	6.54	6.86	9.00	10.96	14.40	6.78	9.97	16.79	7.07	10.16	17.90
8	16	1.05	1.87	2.74	3.30	3.87	4.56	6.12	7.01	1.54	2.59	3.74	4.87	5.25	6.72	8.39	10.58	1.92	3.27	4.72	6.27	6.61	8.75	10.68	14.15	6.52	9.69	16.51	6.81	9.89	17.60
	24	0.65	1.49	2.37	2.97	3.50	4.24	5.72	6.70	1.07	2.14	3.30	4.44	4.79	6.30	7.90	10.16	1.43	2.75	4.23	5.75	6.12	8.25	10.13	13.65	6.01	9.14	15.95	6.30	9.36	16.99
	12	1.08	1.89	2.76	3.31	3.89	4.57	6.13	7.02	1.56	2.59	3.75	4.86	5.26	6.73	8.40	10.59	1.94	3.26	4.69	6.18	6.55	8.60	10.56	13.88	6.44	9.53	16.15	6.72	9.74	17.22
9	16	0.83	1.65	2.52	3.10	3.65	4.37	5.87	6.82	1.26	2.31	3.46	4.58	4.97	6.45	8.08	10.31	1.63	2.93	4.37	5.84	6.23	8.28	10.20	13.55	6.11	9.17	15.79	6.40	9.40	16.83
	24	0.33	1.18	2.06	2.69	3.18	3.97	5.36	6.43	0.69	1.76	2.91	4.04	4.40	5.91	7.45	9.76	1.03	2.28	3.76	5.18	5.61	7.65	9.50	12.91	5.47	8.47	15.08	5.76	8.72	16.06
	12	0.89	1.70	2.57	3.14	3.69	4.40	5.92	6.85	1.32	2.34	3.48	4.55	5.01	6.47	8.12	10.33	1.68	2.95	4.37	5.75	6.19	8.13	10.09	13.26	6.05	9.02	15.40	6.33	9.29	16.44
10	16	0.58	1.41	2.28	2.88	3.39	4.15	5.59	6.59	0.96	2.00	3.13	4.21	4.65	6.13	7.72	9.97	1.31	2.55	3.98	5.34	5.80	7.73	9.65	12.85	5.65	8.58	14.95	5.94	8.86	15.95
	24	0.00 6	0.85	1.72	2.38	2.82	3.65	4.96	6.10	0.29 7	1.35	2.47	3.56	3.95	5.46	6.93	9.28	0.61	1.79	3.24	4.56	5.04	6.97	8.79	12.05	4.88	7.73	14.07	5.17	8.04	15.00
	12	0.46 7	1.28	2.13	2.73	3.22	3.98	5.38	6.41	0.79	1.78	2.86	3.82	4.29	5.61	7.41	9.62	1.12	2.26	3.62	4.78	5.34	7.00	8.94	11.72	5.15	7.84	13.60	5.44	8.21	14.61
12	16	0.06 6	0.88 7	1.72	2.36	2.80	3.61	4.91	6.03	0.34 6	1.33	2.39	3.36	3.79	5.13	6.82	9.08	0.64 7	1.74	3.10	4.24	4.80	6.47	8.32	11.14	4.61	7.23	12.97	4.89	7.62	13.92
	24	0.00 3	0.15 6	0.97 6	1.67 6	2.01 7	2.92 7	4.02	5.32	0.00 6	0.50 6	1.52 7	2.51 7	2.86	4.24	5.70	8.07	0.00 6	0.78 6	2.14 7	3.24 7	3.79	5.46	7.15	10.05	3.59	6.10	11.77	3.87	6.49	12.62
	12	0.03 6	0.81 6	1.62 7	2.24 7	2.66	3.46	4.71	5.83	0.28 6	1.19 7	2.16	2.99	3.46	4.60	6.23	8.13	0.55 6	1.54 7	2.80	3.74	4.37	5.74	7.59	9.92	4.21	6.53	11.54	4.44	6.98	12.54
14	16	0.00 3	0.33 6	1.12 6	1.77 6	2.12 7	2.98 7	4.09	5.32	0.00 3	0.66 6	1.60 6	2.45 6	2.85 7	4.02 7	5.49	7.46	0.00 6	0.93 6	2.18 7	3.10 7	3.71	5.09	6.81	9.20	3.55	5.78	10.76	3.78	6.24	11.68
	24	0.00 2	0.00 3	0.21 3	0.93 3	1.15 6	2.10 6	2.97 6	4.39 6	0.00 2	0.00 3	0.59 6	1.49 6	1.75 6	2.98 6	4.16 7	6.26 7	0.00 3	0.00 3	1.07 6	1.97 6	2.52 6	3.93 6	5.40	7.90	2.35 6	4.45 7	9.32	2.57 6	4.88 7	10.08
	12	0.00 3	0.33 6	1.07 6	1.65 6	2.04 6	2.83 6	3.95	5.12	0.00 3	0.63 6	1.48 6	2.19 6	2.61 7	3.56 7	4.99	6.56	0.04 6	0.88 6	2.00 6	2.75 6	3.39	4.49	6.18	8.06	3.24 7	5.18	9.44	3.44	5.70	10.45
16	16	0.00 2	0.00 3	0.50 3	1.13 3	1.41 6	2.27 6	3.20 6	4.50 6	0.00 3	0.06 3	0.87 6	1.61 6	1.94 6	2.94 6	4.16 7	5.82 7	0.00 3	0.22 6	1.33 6	2.07 6	2.65 6	3.79 6	5.30	7.27	2.50 6	4.36 7	8.57	2.70 6	4.85 7	9.46
	24	0.00 2	0.00 2	0.00 2	0.22 2	0.32 3	1.27 3	1.90 6	3.39 6	0.00 2	0.00 2	0.00 3	0.60 3	0.74 3	1.84 3	2.71 6	4.55 6	0.00 2	0.00 3	0.13 3	0.90 3	1.36 6	2.57 6	3.75 6	5.88 6	1.21 3	2.93 6	7.02 6	1.39 6	3.35 6	7.71 7

Wall Ht. (ft)	Spacing (in) o.c.	600S137-mils (Fy)								600S162-mils (Fy)								600S200-mils (Fy)								600S250-mils (Fy)			600S300-mils (Fy)		
		-33	-43	-54	-54	-68	-68	-97	-97	-33	-43	-54	-54	-68	-68	-97	-97	-33	-43	-54	-54	-68	-68	-97	-97	-54	-68	-97	-54	-68	-97
		(33)	(33)	(33)	(50)	(33)	(50)	(33)	(50)	(33)	(33)	(33)	(50)	(33)	(50)	(33)	(50)	(33)	(33)	(33)	(50)	(33)	(50)	(33)	(50)	(50)	(50)	(50)	(50)	(50)	(50)
	12	1.31	2.06	2.92	3.43	4.13	4.68	6.48	7.22	1.87	2.89	4.04	5.14	5.58	6.99	8.86	10.94	2.29	3.71	5.18	6.86	7.14	9.41	11.46	15.09	7.06	10.43	17.65	7.36	10.59	18.82
8	16	1.12	1.87	2.74	3.27	3.96	4.52	6.30	7.09	1.64	2.69	3.84	4.94	5.38	6.80	8.64	10.76	2.06	3.46	4.95	6.61	6.91	9.18	11.21	14.86	6.82	10.17	17.39	7.12	10.34	18.54
	24	0.75	1.51	2.37	2.96	3.64	4.22	5.95	6.83	1.21	2.28	3.44	4.56	4.99	6.43	8.21	10.39	1.60	2.98	4.50	6.12	6.46	8.72	10.71	14.40	6.35	9.65	16.88	6.65	9.84	17.98
	12	1.15	1.90	2.76	3.29	3.98	4.54	6.32	7.10	1.68	2.71	3.86	4.96	5.40	6.81	8.66	10.77	2.08	3.46	4.93	6.54	6.87	9.07	11.13	14.66	6.76	10.04	17.11	7.06	10.22	18.23
9	16	0.91	1.67	2.53	3.09	3.77	4.34	6.09	6.93	1.40	2.45	3.61	4.71	5.15	6.57	8.38	10.53	1.79	3.15	4.64	6.23	6.58	8.77	10.81	14.36	6.46	9.71	16.78	6.76	9.90	17.87
	24	0.46	1.21	2.07	2.70	3.36	3.95	5.64	6.59	0.86	1.95	3.10	4.22	4.64	6.09	7.82	10.05	1.23	2.55	4.07	5.61	6.01	8.19	10.17	13.77	5.87	9.06	16.12	6.16	9.28	17.16
	12	0.97	1.72	2.58	3.13	3.82	4.38	6.13	6.96	1.46	2.51	3.66	4.75	5.19	6.61	8.42	10.56	1.84	3.18	4.65	6.17	6.56	8.67	10.73	14.14	6.42	9.59	16.47	6.71	9.80	17.55
10	16	0.69	1.44	2.29	2.88	3.56	4.13	5.85	6.75	1.13	2.19	3.34	4.44	4.87	6.30	8.07	10.25	1.49	2.81	4.29	5.79	6.20	8.30	10.33	13.76	6.05	9.18	16.05	6.34	9.41	17.10
	24	0.14 7	0.89	1.74	2.40	3.05	3.65	5.29	6.32	0.48	1.58	2.72	3.84	4.25	5.71	7.37	9.65	0.82	2.08	3.60	5.05	5.50	7.59	9.54	13.03	5.32	8.39	15.24	5.61	8.64	16.21
	12	0.58	1.32	2.16	2.75	3.42	3.99	5.68	6.61	0.97	2.01	3.15	4.20	4.69	6.09	7.83	10.01	1.31	2.55	3.98	5.30	5.81	7.68	9.74	12.83	5.61	8.53	14.89	5.90	8.82	15.91
12	16	0.20 7	0.93	1.75	2.40	3.04	3.63	5.27	6.28	0.53 7	1.58	2.70	3.77	4.23	5.64	7.31	9.54	0.85	2.04	3.49	4.78	5.30	7.17	9.17	12.28	5.09	7.95	14.29	5.38	8.27	15.26
	24	0.00 6	0.20 6	1.00 7	1.73 7	2.33	2.95	4.47	5.66	0.00 6	0.76 7	1.86	2.94	3.35	4.79	6.30	8.66	0.00 6	1.10 7	2.56	3.79	4.34	6.20	8.07	11.25	4.11	6.86	13.15	4.40	7.20	14.01
	12	0.16 6	0.86 7	1.67	2.30	2.93	3.51	5.11	6.14	0.45 6	1.44	2.50	3.44	3.96	5.21	7.05	9.22	0.76 7	1.85	3.21	4.31	4.92	6.51	8.53	11.20	4.69	7.30	13.00	4.97	7.70	13.99
14	16	0.00 6	0.38 6	1.16 7	1.84 7	2.44	3.04	4.55	5.70	0.00 6	0.91 6	1.95 7	2.90 7	3.37	4.64	6.34	8.58	0.21 6	1.25 7	2.60	3.67	4.28	5.87	7.79	10.50	4.05	6.57	12.23	4.32	6.98	13.14
	24	0.00 3	0.00 3	0.22 6	1.00 6	1.53 6	2.16 6	3.51 7	4.86 7	0.00 3	0.00 6	0.94 6	1.92 6	2.29 6	3.60 6	5.04	7.39	0.00 3	0.14 6	1.49 6	2.52 6	3.10 7	4.70 7	6.40	9.21	2.86 7	5.24	10.80	3.12 7	5.64	11.57
	12	0.00 3	0.39 6	1.14 6	1.80 6	2.39 7	2.96 7	4.44	5.56	0.00 6	0.87 6	1.83 7	2.64 7	3.14	4.22	5.88	7.74	0.23 6	1.18 6	2.42	3.31	3.97	5.28	7.19	9.42	3.78	6.02	10.97	4.00	6.48	11.94
16	16	0.00 3	0.00 3	0.54 6	1.25 6	1.79 6	2.38 6	3.74 7	4.99 7	0.00 3	0.28 6	1.20 6	2.04 6	2.47 6	3.57 6	5.05	6.99	0.00 3	0.50 6	1.73 6	2.61 6	3.23 7	4.56 7	6.32	8.61	3.03 7	5.18	10.08	3.25 7	5.63	10.95
	24	0.00 2	0.00 2	0.00 3	0.28 3	0.73 3	1.35 3	2.49 6	3.95 6	0.00 2	0.00 3	0.09 3	0.98 3	1.26 6	2.42 6	3.57 6	5.67 6	0.00 2	0.00 3	0.50 6	1.37 6	1.91 6	3.28 6	4.74 7	7.16 7	1.70 6	3.70 6	8.47 7	1.90 6	4.10 6	9.16

Wall Ht. (ft)	Spacing (in) o.c.	800S137-mils (Fy)								800S162-mils (Fy)								800S200-mils (Fy)								800S250-mils (Fy)			800S300-mils (Fy)		
		-33	-43	-54	-54	-68	-68	-97	-97	-33	-43	-54	-54	-68	-68	-97	-97	-33	-43	-54	-54	-68	-68	-97	-97	-54	-68	-97	-54	-68	-97
		(33)	(33)	(33)	(50)	(33)	(50)	(33)	(50)	(33)	(33)	(33)	(50)	(33)	(50)	(33)	(50)	(33)	(33)	(33)	(50)	(33)	(50)	(33)	(50)	(50)	(50)	(50)	(50)	(50)	(50)
	12	1.38	2.11	2.96	3.31	4.11	4.50	6.65	6.98	2.00	2.98	4.12	5.09	5.68	6.92	9.23	10.93	2.55	4.03	5.54	7.31	7.56	9.89	12.12	15.60	7.74	11.34	19.32	8.08	11.62	21.04
8	16	1.25	1.98	2.84	3.21	3.99	4.40	6.54	6.89	1.84	2.82	3.97	4.95	5.53	6.78	9.09	10.80	2.37	3.85	5.38	7.14	7.40	9.73	11.95	15.45	7.56	11.15	19.14	7.90	11.43	20.84
	24	0.98	1.72	2.58	3.00	3.74	4.20	6.32	6.70	1.52	2.52	3.67	4.67	5.23	6.51	8.81	10.53	2.03	3.49	5.04	6.78	7.08	9.41	11.62	15.14	7.20	10.78	18.77	7.54	11.06	20.42
	12	1.27	2.01	2.86	3.22	4.01	4.42	6.56	6.90	1.87	2.85	3.99	4.97	5.55	6.8	9.11	10.82	2.40	3.88	5.40	7.16	7.43	9.75	11.97	15.47	7.55	11.14	19.08	7.88	11.39	20.71
9	16	1.10	1.84	2.70	3.09	3.85	4.29	6.42	6.78	1.66	2.65	3.80	4.79	5.36	6.62	8.93	10.64	2.18	3.65	5.19	6.93	7.22	9.54	11.76	15.27	7.33	10.89	18.84	7.65	11.15	20.44
	24	0.76	1.51	2.38	2.82	3.54	4.03	6.14	6.54	1.26	2.26	3.42	4.44	4.98	6.27	8.58	10.30	1.75	3.20	4.77	6.48	6.81	9.13	11.34	14.87	6.87	10.41	18.36	7.19	10.68	19.90
	12	1.15	1.88	2.74	3.12	3.89	4.32	6.45	6.81	1.72	2.70	3.85	4.84	5.41	6.66	8.98	10.68	2.24	3.71	5.24	6.98	7.27	9.59	11.81	15.31	7.34	10.90	18.78	7.65	11.13	20.30
10	16	0.93	1.68	2.54	2.96	3.69	4.16	6.28	6.66	1.47	2.46	3.61	4.61	5.17	6.44	8.75	10.46	1.97	3.42	4.98	6.70	7.01	9.33	11.54	15.05	7.05	10.59	18.48	7.37	10.83	19.97
	24	0.52	1.28	2.15	2.63	3.30	3.84	5.93	6.36	0.97	1.98	3.13	4.17	4.69	6.01	8.31	10.03	1.43	2.86	4.46	6.13	6.50	8.81	11.02	14.55	6.49	9.99	17.89	6.81	10.24	19.30
	12	0.86	1.60	2.46	2.89	3.61	4.09	6.20	6.59	1.37	2.36	3.51	4.51	5.06	6.34	8.64	10.35	1.86	3.30	4.86	6.55	6.88	9.18	11.41	14.91	6.81	10.30	18.03	7.11	10.48	19.29
12	16	0.56	1.31	2.17	2.65	3.33	3.86	5.94	6.37	1.02	2.01	3.16	4.18	4.71	6.02	8.31	10.03	1.48	2.89	4.47	6.13	6.51	8.80	11.02	14.53	6.40	9.85	17.58	6.70	10.05	18.80
	24	0.00	0.75	1.61	2.17	2.76	3.40	5.43	5.92	0.33	1.34	2.48	3.55	4.03	5.38	7.66	9.39	0.73	2.10	3.73	5.32	5.76	8.04	10.24	13.78	5.60	8.99	16.70	5.90	9.21	17.83
	12	0.53	1.27	2.13	2.60	3.27	3.81	5.88	6.31	0.97	1.96	3.09	4.11	4.63	5.93	8.22	9.93	1.40	2.78	4.35	5.93	6.38	8.61	10.90	14.38	6.15	9.48	16.94	6.44	9.67	17.99
14	16	0.14	0.89	1.74	2.28	2.88	3.49	5.53	6.00	0.51	1.49	2.63	3.66	4.16	5.49	7.77	9.48	0.91	2.24	3.84	5.37	5.87	8.08	10.35	13.83	5.61	8.89	16.32	5.89	9.09	17.32
	24	0.00 6	0.16 7	1.00	1.64	2.13	2.87	4.84	5.39	0.00 6	0.62	1.73	2.81	3.24	4.63	6.87	8.60	0.00 7	1.22	2.85	4.30	4.87	7.05	9.28	12.79	4.57	7.74	15.13	4.84	7.97	16.01
	12	0.17 7	0.90	1.74	2.27	2.87	3.47	5.50	5.97	0.53	1.50	2.62	3.63	4.13	5.44	7.71	9.40	0.91	2.18	3.72	5.12	5.68	7.71	10.09	13.34	5.39	8.48	15.47	5.67	8.73	16.45
16	16	0.00 6	0.42 7	1.26	1.85	2.38	3.06	5.04	5.56	0.00 6	0.93	2.03	3.07	3.52	4.86	7.11	8.79	0.31 7	1.53	3.08	4.43	5.03	7.04	9.38	12.64	4.71	7.73	14.69	4.99	8.00	15.59
	24	0.00 3	0.00 6	0.35 6	1.06 6	1.43 7	2.27 7	4.14	4.77	0.00 6	0.00 6	0.93 7	2.01 7	2.37	3.78	5.96	7.65	0.00 6	0.32 6	1.89	3.15	3.80	5.77	8.02	11.30	3.44	6.32	13.19	3.71	6.61	13.96

ALLOWABLE AXIAL LOAD TABLES

30 PSF LATERAL LOAD

Wall Ht. (ft)	Spacing (in) o.c.	350S137-mils (Fy)								350S162-mils (Fy)								350S200-mils (Fy)								350S250-mils (Fy)			350S300-mils (Fy)		
		-33 (33)	-43 (33)	-54 (33)	-54 (50)	-68 (33)	-68 (50)	-97 (33)	-97 (50)	-33 (33)	-43 (33)	-54 (33)	-54 (50)	-68 (33)	-68 (50)	-97 (33)	-97 (50)	-33 (33)	-43 (33)	-54 (33)	-54 (50)	-68 (33)	-68 (50)	-97 (33)	-97 (50)	-54 (50)	-68 (50)	-97 (50)	-54 (50)	-68 (50)	-97 (50)
8	12	0.50 7	1.07	1.67	2.27	2.59	3.21	4.07	5.12	0.78	1.49	2.21	2.99	3.25	4.08	5.10	6.51	1.05	2.00	2.94	3.82	4.14	5.22	6.32	8.03	4.40	6.12	9.39	4.50	6.57	10.43
	16	0.18 6	0.73 7	1.30	1.96	2.23	2.87	3.69	4.80	0.43 6	1.11 7	1.81	2.64	2.87	3.72	4.69	6.15	0.66 7	1.59	2.51	3.42	3.73	4.83	5.89	7.66	3.96	5.67	9.00	4.08	6.12	9.98
	24	0.00 3	0.10 6	0.61 6	1.37 6	1.58 7	2.25 7	2.99	4.20	0.00 6	0.42 6	1.06 6	1.99 6	2.16	3.05	3.92	5.47	0.00 6	0.83 6	1.71 7	2.67 7	2.96	4.08	5.07	6.93	3.14	4.83	8.23	3.28	5.27	9.13
9	12	0.23 6	0.75 6	1.28 7	1.86 7	2.16	2.71	3.65	4.71	0.46 6	1.11 7	1.76	2.48	2.76	3.48	4.47	5.70	0.68 7	1.56	2.41	3.20	3.56	4.48	5.59	7.07	3.77	5.27	8.32	3.90	5.74	9.38
	16	0.00 3	0.36 6	0.86 6	1.51 6	1.76 7	2.33 7	3.19	4.31	0.07 6	0.69 6	1.30 7	2.08 7	2.31	3.06	3.98	5.28	0.25 6	1.09 6	1.92	2.75	3.08	4.03	5.08	6.63	3.26	4.75	7.85	3.40	5.21	8.84
	24	0.00 2	0.00 3	0.09 3	0.86 3	1.01 6	1.63 6	2.36 6	3.58 6	0.00 3	0.00 3	0.48 6	1.37 6	1.51 6	2.31 6	3.10 7	4.50 7	0.00 3	0.26 6	1.03 6	1.92 6	2.21 7	3.19 7	4.13	5.80	2.34 6	3.81 7	6.97	2.49 7	4.24	7.83
10	12	0.00 3	0.44 6	0.91 6	1.46 6	1.74 7	2.21 7	3.07	4.00	0.17 6	0.74 6	1.32 7	1.99 7	2.26	2.88	3.81	4.87	0.34 6	1.13 6	1.90 7	2.59 7	2.98	3.75	4.84	6.09	3.11	4.43	7.23	3.27	4.91	8.17
	16	0.00 3	0.02 3	0.45 6	1.08 6	1.29 6	1.80 6	2.57 7	3.56 7	0.00 3	0.29 6	0.83 6	1.56 6	1.77 6	2.43 6	3.27	4.41	0.00 3	0.63 6	1.37 6	2.10 6	2.45 7	3.26 7	4.26	5.60	2.56 7	3.87	6.70	2.72 7	4.33	7.56
	24	0.00 2	0.00 2	0.00 3	0.40 3	0.49 3	1.07 3	1.66 6	2.78 6	0.00 2	0.00 3	0.00 3	0.81 3	0.90 6	1.63 6	2.31 6	3.58 6	0.00 2	0.00 3	0.42 3	1.24 3	1.50 6	2.37 6	3.22 6	4.70 6	1.58 6	2.87 6	5.74 7	1.73 6	3.27 6	6.45
12	12	0.00 2	0.00 3	0.26 3	0.77 3	0.96 6	1.34 6	1.99 6	2.68 6	0.00 2	0.13 3	0.56 3	1.13 3	1.35 6	1.81 6	2.57 6	3.34 6	0.00 3	0.40 3	0.99 6	1.53 6	1.90 6	2.44 6	3.39 7	4.27 7	1.89 6	2.92 6	5.18	2.15 6	3.41 7	5.87
	16	0.00 2	0.00 2	0.00 2	0.38 2	0.48 3	0.91 3	1.44 6	2.23 6	0.00 2	0.00 2	0.04 3	0.70 3	0.82 3	1.35 3	1.99 6	2.86 6	0.00 2	0.00 3	0.43 3	1.04 3	1.33 6	1.94 6	2.75 6	3.75 6	1.33 6	2.35 6	4.61 7	1.54 6	2.76 6	5.21 7
	24	0.00 1	0.00 2	0.00 2	0.00 2	0.00 2	0.18 2	0.50 3	1.45 3	0.00 1	0.00 2	0.00 2	0.00 2	0.00 2	0.56 2	0.97 3	2.03 3	0.00 2	0.00 2	0.00 2	0.20 2	0.33 3	1.06 3	1.64 3	2.84 3	0.36 3	1.34 3	3.60 6	0.49 3	1.64 3	4.05 6
14	12	0.00 2	0.00 2	0.00 2	0.28 2	0.36 2	0.70 2	1.12 3	1.71 3	0.00 2	0.00 2	0.00 2	0.53 2	0.63 3	1.04 3	1.56 6	2.21 6	0.00 2	0.00 2	0.32 3	0.79 3	1.04 3	1.49 3	2.19 6	2.91 6	1.02 3	1.82 6	3.60 6	1.22 3	2.16 6	4.10 6
	16	0.00 1	0.00 1	0.00 2	0.00 2	0.00 2	0.29 2	0.60 2	1.29 2	0.00 1	0.00 2	0.00 2	0.13 2	0.13 2	0.60 2	0.99 3	1.75 3	0.00 2	0.00 2	0.00 2	0.33 2	0.48 2	1.01 2	1.56 3	2.41 3	0.49 2	1.26 3	3.04 6	0.62 3	1.54 3	3.45 6
	24	0.00 1	0.00 1	0.00 1	0.00 1	0.00 1	0.00 1	0.00 2	0.56 2	0.00 1	0.00 1	0.00 1	0.00 1	0.00 2	0.00 2	0.01 2	0.96 2	0.00 1	0.00 1	0.00 2	0.00 2	0.00 2	0.18 2	0.48 2	1.54 2	0.00 2	0.31 2	2.08 3	0.00 2	0.47 2	2.32 3
16	12	0.00 1	0.00 1	0.00 2	0.00 2	0.00 2	0.26 2	0.50 2	1.05 2	0.00 1	0.00 2	0.00 2	0.13 2	0.13 2	0.51 2	0.82 3	1.42 3	0.00 1	0.00 2	0.00 2	0.29 2	0.42 2	0.84 2	1.28 3	1.95 3	0.42 2	1.04 3	2.47 3	0.53 2	1.28 3	2.81 6
	16	0.00 1	0.00 1	0.00 1	0.00 1	0.00 1	0.00 1	0.02 2	0.66 2	0.00 1	0.00 1	0.00 1	0.00 1	0.00 2	0.11 2	0.30 2	0.99 2	0.00 1	0.00 1	0.00 2	0.00 2	0.00 2	0.39 2	0.70 2	1.48 2	0.00 2	0.53 2	1.95 3	0.00 2	0.69 2	2.20 3
	24	0.00 1	0.00 1	0.00 1	0.00 1	0.00 1	0.00 1	0.00 1	0.00 1	0.00 1	0.00 1	0.00 1	0.00 1	0.00 1	0.00 1	0.00 2	0.27 2	0.00 1	0.00 1	0.00 1	0.00 1	0.00 1	0.00 1	0.00 2	0.67 2	0.00 1	0.00 2	1.04 2	0.00 1	0.00 2	1.14 2

Wall Ht. (ft)	Spacing (in) o.c.	362S137-mils (Fy)								362S162-mils (Fy)								362S200-mils (Fy)								362S250-mils (Fy)			362S300-mils (Fy)		
		-33 (33)	-43 (33)	-54 (33)	-54 (50)	-68 (33)	-68 (50)	-97 (33)	-97 (50)	-33 (33)	-43 (33)	-54 (33)	-54 (50)	-68 (33)	-68 (50)	-97 (33)	-97 (50)	-33 (33)	-43 (33)	-54 (33)	-54 (50)	-68 (33)	-68 (50)	-97 (33)	-97 (50)	-54 (50)	-68 (50)	-97 (50)	-54 (50)	-68 (50)	-97 (50)
8	12	0.56 7	1.16	1.81	2.43	2.57	3.44	4.23	5.30	0.85	1.59	2.37	3.17	3.29	4.38	5.40	6.93	1.13	2.13	3.12	4.06	4.39	5.58	6.67	8.55	4.62	6.53	9.99	4.73	6.96	10.99
	16	0.24 6	0.81 7	1.43	2.11	2.17	3.10	3.87	4.99	0.50 7	1.21	1.97	2.82	2.86	4.01	4.99	6.57	0.74 7	1.71	2.69	3.65	3.98	5.18	6.24	8.17	4.19	6.08	9.59	4.31	6.50	10.55
	24	0.00 3	0.18 6	0.73 6	1.52 6	1.42 7	2.47 7	3.18	4.40	0.00 6	0.52 6	1.21 7	2.16 7	2.06	3.32	4.22	5.89	0.02 6	0.95 7	1.89	2.89	3.21	4.42	5.43	7.44	3.37	5.23	8.82	3.51	5.64	9.69
9	12	0.28 6	0.83 7	1.41	2.03	2.12	2.94	3.86	4.95	0.53 6	1.21	1.92	2.68	2.76	3.77	4.78	6.13	0.77 7	1.68	2.61	3.44	3.82	4.84	5.95	7.59	4.00	5.68	8.92	4.13	6.16	9.99
	16	0.00 6	0.44 6	0.98 6	1.66 6	1.65 7	2.55 7	3.41	4.56	0.13 6	0.78 6	1.45 7	2.27 7	2.26	3.34	4.29	5.71	0.32 6	1.21 7	2.11	2.97	3.34	4.37	5.44	7.14	3.49	5.15	8.44	3.63	5.62	9.45
	24	0.00 3	0.00 3	0.20 6	0.99 6	0.80 6	1.84 6	2.57 7	3.83 7	0.00 3	0.02 6	0.61 6	1.54 6	1.36 6	2.57 6	3.40	4.91	0.00 3	0.37 6	1.20 6	2.12 6	2.45 7	3.51 7	4.48	6.29	2.56 7	4.18	7.54	2.71 7	4.62	8.42
10	12	0.02 3	0.51 6	1.03 6	1.62 6	1.66 7	2.44 7	3.34	4.35	0.23 6	0.84 6	1.47 7	2.18 7	2.23	3.15	4.12	5.30	0.42 6	1.25 7	2.09	2.83	3.23	4.09	5.20	6.60	3.37	4.82	7.82	3.51	5.31	8.83
	16	0.00 3	0.09 3	0.56 6	1.22 6	1.15 6	2.01 6	2.83 7	3.91 7	0.00 3	0.38 6	0.96 6	1.74 6	1.69 7	2.69 7	3.58	4.82	0.00 6	0.74 6	1.54 6	2.32 6	2.69 7	3.58 7	4.62	6.10	2.81 7	4.24	7.28	2.96	4.70	8.21
	24	0.00 2	0.00 2	0.00 3	0.51 3	0.23 3	1.25 3	1.90 6	3.10 6	0.00 2	0.00 3	0.06 3	0.96 3	0.71 6	1.86 6	2.59 6	3.96 6	0.00 3	0.00 3	0.56 6	1.43 6	1.72 6	2.66 6	3.56 7	5.17 7	1.80 6	3.20 6	6.28	1.95 6	3.61 7	7.06
12	12	0.00 2	0.00 3	0.35 3	0.89 3	0.83 6	1.51 6	2.22 6	2.99 6	0.00 2	0.20 3	0.67 6	1.29 6	1.27 6	2.03 6	2.85 7	3.70 7	0.00 3	0.49 6	1.14 6	1.73 6	2.12 6	2.72 6	3.72	4.72	2.12 6	3.25 7	5.69	2.37 6	3.73	6.45
	16	0.00 2	0.00 2	0.00 3	0.48 3	0.28 3	1.06 3	1.66 6	2.52 6	0.00 2	0.00 2	0.13 3	0.84 3	0.68 3	1.55 3	2.24 6	3.20 6	0.00 2	0.00 3	0.56 3	1.21 3	1.53 6	2.19 6	3.06 6	4.17 6	1.53 6	2.64 6	5.10 7	1.74 6	3.06 6	5.76
	24	0.00 1	0.00 2	0.00 2	0.00 2	0.00 2	0.29 2	0.68 3	1.70 3	0.00 1	0.00 2	0.00 2	0.05 2	0.00 2	0.71 2	1.19 3	2.32 3	0.00 2	0.00 2	0.00 2	0.31 2	0.50 3	1.26 3	1.91 6	3.21 6	0.51 3	1.57 3	4.04 6	0.65 3	1.90 6	4.54 6
14	12	0.00 2	0.00 2	0.00 2	0.35 2	0.19 3	0.82 3	1.31 3	1.94 3	0.00 2	0.00 2	0.08 2	0.64 2	0.51 3	1.19 3	1.79 6	2.48 6	0.00 2	0.00 2	0.42 3	0.92 3	1.21 3	1.69 3	2.47 6	3.24 6	1.17 3	2.05 6	3.99 6	1.39 3	2.43 6	4.54 7
	16	0.00 1	0.00 2	0.00 2	0.00 2	0.00 2	0.39 2	0.75 3	1.49 3	0.00 1	0.00 2	0.00 2	0.21 2	0.00 2	0.73 2	1.19 3	2.00 3	0.00 2	0.00 2	0.00 2	0.43 2	0.62 3	1.18 3	1.80 3	2.71 3	0.61 3	1.46 3	3.40 6	0.76 3	1.77 3	3.85 6
	24	0.00 1	0.00 1	0.00 1	0.00 1	0.00 2	0.00 2	0.00 2	0.72 2	0.00 1	0.00 1	0.00 1	0.00 1	0.00 2	0.00 2	0.15 2	1.16 2	0.00 1	0.00 1	0.00 2	0.00 2	0.00 2	0.31 2	0.67 2	1.80 2	0.00 2	0.45 2	2.38 3	0.00 2	0.64 2	2.66 3
16	12	0.00 1	0.00 1	0.00 2	0.00 2	0.00 2	0.34 2	0.64 2	1.21 2	0.00 1	0.00 2	0.00 2	0.19 2	0.00 2	0.62 2	0.99 3	1.62 3	0.00 1	0.00 2	0.00 2	0.38 2	0.54 2	0.97 2	1.49 3	2.20 3	0.53 2	1.21 3	2.77 6	0.66 3	1.47 3	3.14 6
	16	0.00 1	0.00 1	0.00 1	0.00 1	0.00 2	0.00 2	0.12 2	0.80 2	0.00 1	0.00 1	0.00 2	0.00 2	0.00 2	0.19 2	0.43 2	1.17 2	0.00 1	0.00 1	0.00 2	0.00 2	0.00 2	0.50 2	0.87 2	1.70 2	0.00 2	0.66 2	2.21 3	0.07 2	0.85 2	2.49 3
	24	0.00 1	0.00 1	0.00 1	0.00 1	0.00 1	0.00 1	0.00 1	0.09 1	0.00 1	0.00 1	0.00 1	0.00 1	0.00 1	0.00 1	0.00 2	0.40 2	0.00 1	0.00 1	0.00 1	0.00 1	0.00 1	0.00 1	0.00 2	0.85 2	0.00 1	0.00 2	1.25 2	0.00 2	0.00 2	1.38 2

Wall Ht. (ft)	Spacing (in) o.c.	400S137-mils (Fy)								400S162-mils (Fy)								400S200-mils (Fy)								400S250-mils (Fy)			400S300-mils (Fy)		
		-33 (33)	-43 (33)	-54 (33)	-54 (50)	-68 (33)	-68 (50)	-97 (33)	-97 (50)	-33 (33)	-43 (33)	-54 (33)	-54 (50)	-68 (33)	-68 (50)	-97 (33)	-97 (50)	-33 (33)	-43 (33)	-54 (33)	-54 (50)	-68 (33)	-68 (50)	-97 (33)	-97 (50)	-54 (50)	-68 (50)	-97 (50)	-54 (50)	-68 (50)	-97 (50)
8	12	0.72	1.38	2.12	2.81	3.07	4.06	4.70	5.77	1.05	1.86	2.75	3.67	3.91	5.18	6.27	8.17	1.35	2.46	3.57	4.68	4.97	6.55	7.69	10.06	5.16	7.49	11.73	5.32	7.87	12.70
	16	0.40 7	1.04	1.75	2.50	2.67	3.72	4.36	5.49	0.70	1.50	2.35	3.32	3.48	4.81	5.88	7.82	0.97	2.06	3.15	4.28	4.52	6.14	7.27	9.68	4.74	7.04	11.33	4.92	7.43	12.26
	24	0.00 6	0.41 6	1.05 7	1.90 7	1.91	3.07	3.72	4.96	0.05 6	0.81 7	1.60	2.66	2.66	4.10	5.12	7.13	0.26 6	1.30	2.36	3.52	3.66	5.37	6.47	8.95	3.95	6.19	10.55	4.14	6.58	11.41
9	12	0.44 7	1.06	1.75	2.43	2.64	3.63	4.36	5.47	0.73 7	1.49	2.32	3.20	3.39	4.61	5.68	7.41	0.99	2.03	3.08	4.09	4.38	5.84	7.01	9.14	4.62	6.78	10.70	4.76	7.19	11.68
	16	0.07 6	0.67 6	1.31	2.06	2.16	3.21	3.94	5.12	0.33 6	1.07 7	1.85	2.78	2.88	4.16	5.20	6.98	0.55 7	1.56	2.58	3.61	3.84	5.35	6.50	8.67	4.12	6.24	10.20	4.27	6.65	11.14
	24	0.00 3	0.00 6	0.51 6	1.37 6	1.27 6	2.45 6	3.15	4.45	0.00 3	0.28 6	0.99 6	2.02 6	1.93 7	3.33 7	4.29	6.16	0.00 6	0.70 6	1.66 7	2.73 7	2.84	4.45	5.54	7.80	3.18	5.22	9.27	3.34	5.63	10.11
10	12	0.17 6	0.74 6	1.36 7	2.03 7	2.17	3.11	3.98	5.12	0.41 6	1.12 7	1.87	2.70	2.85	3.99	5.04	6.58	0.64 7	1.59	2.57	3.47	3.75	5.09	6.27	8.14	4.02	5.98	9.59	4.16	6.46	10.61
	16	0.00 3	0.30 6	0.87 6	1.61 6	1.63 7	2.65 7	3.47	4.68	0.00 6	0.64 6	1.35 7	2.24 7	2.27	3.48	4.48	6.08	0.15 6	1.07 6	2.01	2.94	3.14	4.54	5.68	7.61	3.44	5.35	9.01	3.60	5.82	9.97
	24	0.00 2	0.00 3	0.00 3	0.85 3	0.65 6	1.80 6	2.55 6	3.88 6	0.00 3	0.00 3	0.40 6	1.40 6	1.23 6	2.57 6	3.45 7	5.16 7	0.00 3	0.13 6	0.99 6	1.98 6	2.03 6	3.54 6	4.58	6.62	2.39 6	4.22 7	7.94	2.56 7	4.66	8.77
12	12	0.00 3	0.14 3	0.63 6	1.25 6	1.26 6	2.09 6	2.97 7	3.98 7	0.00 3	0.43 6	1.03 6	1.75 6	1.80 6	2.76 6	3.72	4.88	0.00 3	0.78 6	1.58 6	2.31 6	2.53 7	3.62 7	4.74	6.14	2.80 7	4.29	7.33	2.96 7	4.78	8.28
	16	0.00 2	0.00 3	0.08 3	0.79 3	0.65 6	1.58 6	2.35 6	3.45 6	0.00 2	0.00 3	0.43 3	1.25 3	1.15 6	2.20 6	3.06 6	4.32 6	0.00 3	0.20 3	0.95 6	1.73 6	1.84 6	3.00 6	4.04 7	5.52 7	2.14 6	3.59 7	6.66	2.30 6	4.04 7	7.51
	24	0.00 2	0.00 2	0.00 2	0.00 2	0.00 3	0.68 3	1.27 3	2.51 3	0.00 2	0.00 2	0.00 2	0.36 2	0.01 3	1.23 3	1.90 6	3.31 6	0.00 2	0.00 2	0.00 3	0.71 3	0.62 3	1.93 3	2.78 6	4.42 6	0.99 3	2.36 6	5.46 6	1.13 3	2.74 6	6.12 7
14	12	0.00 2	0.00 2	0.03 3	0.62 3	0.50 3	1.24 3	1.92 6	2.70 6	0.00 2	0.00 3	0.33 3	0.98 3	0.92 6	1.72 6	2.52 6	3.40 6	0.00 2	0.13 3	0.76 3	1.36 3	1.49 6	2.36 6	3.34 6	4.37 6	1.69 6	2.83 6	5.31 7	1.92 6	3.29 6	6.01
	16	0.00 2	0.00 2	0.00 2	0.16 2	0.00 2	0.73 2	1.29 3	2.19 3	0.00 2	0.00 2	0.00 2	0.48 2	0.26 3	1.18 3	1.83 6	2.84 6	0.00 2	0.00 2	0.11 3	0.79 3	0.78 3	1.76 3	2.60 6	3.75 6	1.04 3	2.15 6	4.63 6	1.22 3	2.54 6	5.22 6
	24	0.00 1	0.00 1	0.00 2	0.00 2	0.00 2	0.00 2	0.21 2	1.29 2	0.00 1	0.00 2	0.00 2	0.00 2	0.00 2	0.25 2	0.66 3	1.86 3	0.00 1	0.00 2	0.00 2	0.00 2	0.00 2	0.74 2	1.32 3	2.68 3	0.00 2	0.97 3	3.44 3	0.02 2	1.23 3	3.85 6
16	12	0.00 1	0.00 2	0.00 2	0.16 2	0.00 2	0.62 2	1.10 3	1.77 3	0.00 2	0.00 2	0.00 2	0.42 2	0.25 3	0.98 3	1.55 3	2.30 3	0.00 2	0.00 2	0.14 2	0.68 2	0.69 3	1.45 3	2.20 6	3.04 6	0.89 3	1.77 3	3.76 6	1.07 3	2.11 6	4.26 6
	16	0.00 1	0.00 1	0.00 2	0.00 2	0.00 2	0.15 2	0.49 2	1.29 2	0.00 1	0.00 2	0.00 2	0.00 2	0.00 2	0.48 2	0.90 3	1.77 3	0.00 1	0.00 2	0.00 2	0.14 2	0.01 2	0.89 2	1.48 3	2.46 3	0.27 2	1.12 3	3.11 3	0.38 2	1.39 3	3.50 6
	24	0.00 1	0.00 1	0.00 1	0.00 1	0.00 1	0.00 1	0.00 2	0.46 2	0.00 1	0.00 1	0.00 1	0.00 1	0.00 2	0.00 2	0.00 2	0.86 2	0.00 1	0.00 1	0.00 1	0.00 1	0.00 2	0.00 2	0.24 2	1.46 2	0.00 2	0.02 2	1.99 2	0.00 2	0.15 2	2.20 3

Wall Ht. (ft)	Spacing (in) o.c.	550S137-mils (Fy)								550S162-mils (Fy)								550S200-mils (Fy)								550S250-mils (Fy)			550S300-mils (Fy)		
		-33 (33)	-43 (33)	-54 (33)	-54 (50)	-68 (33)	-68 (50)	-97 (33)	-97 (50)	-33 (33)	-43 (33)	-54 (33)	-54 (50)	-68 (33)	-68 (50)	-97 (33)	-97 (50)	-33 (33)	-43 (33)	-54 (33)	-54 (50)	-68 (33)	-68 (50)	-97 (33)	-97 (50)	-54 (50)	-68 (50)	-97 (50)	-54 (50)	-68 (50)	-97 (50)
8	12	1.13	1.94	2.81	3.36	3.94	4.62	6.20	7.07	1.64	2.68	3.83	4.96	5.34	6.80	8.49	10.67	2.02	3.38	4.82	6.38	6.71	8.85	10.79	14.25	6.62	9.80	16.62	6.91	10.00	17.72
	16	0.89	1.71	2.59	3.17	3.72	4.43	5.96	6.89	1.35	2.41	3.56	4.70	5.06	6.55	8.19	10.41	1.73	3.06	4.52	6.06	6.41	8.55	10.46	13.95	6.31	9.47	16.28	6.60	9.68	17.35
	24	0.41	1.27	2.15	2.78	3.28	4.06	5.48	6.52	0.79	1.88	3.04	4.19	4.53	6.05	7.60	9.91	1.15	2.44	3.94	5.44	5.82	7.96	9.80	13.35	5.71	8.81	15.62	6.00	9.04	16.63
9	12	0.93	1.75	2.62	3.19	3.74	4.45	5.98	6.90	1.38	2.42	3.58	4.69	5.09	6.56	8.21	10.42	1.75	3.06	4.50	5.97	6.36	8.40	10.34	13.68	6.24	9.32	15.93	6.53	9.53	16.99
	16	0.62	1.46	2.33	2.94	3.46	4.21	5.67	6.66	1.03	2.09	3.24	4.36	4.74	6.23	7.83	10.08	1.38	2.67	4.12	5.57	5.98	8.02	9.92	13.29	5.85	8.89	15.50	6.14	9.13	16.52
	24	0.05 7	0.91	1.79	2.45	2.90	3.73	5.06	6.19	0.35	1.44	2.58	3.72	4.06	5.59	7.07	9.43	0.68	1.91	3.40	4.80	5.25	7.28	9.09	12.53	5.10	8.06	14.66	5.39	8.33	15.61
10	12	0.70	1.53	2.39	2.98	3.51	4.25	5.72	6.69	1.10	2.14	3.27	4.34	4.79	6.26	7.88	10.11	1.46	2.71	4.13	5.51	5.96	7.89	9.82	13.01	5.80	8.76	15.13	6.09	9.03	16.15
	16	0.34	1.18	2.05	2.68	3.16	3.95	5.34	6.40	0.69	1.74	2.86	3.94	4.36	5.85	7.40	9.69	1.02	2.24	3.68	5.03	5.49	7.42	9.30	12.53	5.33	8.24	14.59	5.62	8.53	15.57
	24	0.00 6	0.53 7	1.39	2.09	2.48	3.36	4.59	5.81	0.00 6	0.97 7	2.08	3.18	3.54	5.07	6.47	8.87	0.21 7	1.35	2.82	4.11	4.61	6.53	8.29	11.59	4.43	7.24	13.56	4.72	7.56	14.45
12	12	0.22 6	1.04 7	1.88	2.51	2.97	3.76	5.10	6.18	0.52 7	1.51	2.57	3.54	3.99	5.32	7.05	9.29	0.83	1.94	3.31	4.45	5.01	6.68	8.57	11.37	4.82	7.47	13.22	5.11	7.85	14.19
	16	0.00 6	0.58 6	1.41 7	2.08 7	2.47	3.33	4.55	5.74	0.00 6	0.99 7	2.03	3.01	3.41	4.76	6.36	8.67	0.28 6	1.34 7	2.71	3.83	4.39	6.05	7.84	10.70	4.19	6.77	12.48	4.48	7.16	13.39
	24	0.00 3	0.00 3	0.55 6	1.29 6	1.56 6	2.52 6	3.52	4.91	0.00 3	0.04 6	1.03 6	2.04 6	2.33 7	3.74 7	5.08	7.50	0.00 6	0.24 6	1.60 6	2.68 6	3.23	4.90	6.48	9.44	3.03 7	5.46	11.09	3.29 7	5.86	11.87
14	12	0.00 3	0.52 6	1.31 6	1.95 6	2.34 7	3.16 7	4.34	5.52	0.00 6	0.87 6	1.82 7	2.66 7	3.09	4.24	5.78	7.72	0.21 6	1.17 6	2.43	3.35	3.97	5.35	7.12	9.48	3.81	6.07	11.06	4.04	6.53	12.02
	16	0.00 3	0.00 3	0.74 6	1.42 6	1.72 6	2.61 6	3.63 7	4.93 7	0.00 3	0.26 6	1.18 6	2.05 6	2.39 6	3.59 6	4.94	6.96	0.00 3	0.48 6	1.72 6	2.63 6	3.22 7	4.61 7	6.23	8.66	3.05 7	5.23	10.16	3.28 7	5.67	11.02
	24	0.00 2	0.00 2	0.00 3	0.47 3	0.61 3	1.62 3	2.35 6	3.87 6	0.00 2	0.00 3	0.04 3	0.96 3	1.14 6	2.41 6	3.43 6	5.60 6	0.00 2	0.00 3	0.46 6	1.36 6	1.87 6	3.30 6	4.62 7	7.19 7	1.69 6	3.71 6	8.53	1.90 6	4.12 6	9.21
16	12	0.00 2	0.01 3	0.72 6	1.33 6	1.66 6	2.49 6	3.49 7	4.74 7	0.00 3	0.28 3	1.11 6	1.83 6	2.20 6	3.18 6	4.48 7	6.10 7	0.00 3	0.48 6	1.59 6	2.33 6	2.94 7	4.06 7	5.64	7.58	2.79 6	4.68 7	8.91	2.99 7	5.18	9.85
	16	0.00 2	0.00 2	0.08 3	0.75 3	0.95 3	1.85 3	2.66 6	4.03 6	0.00 2	0.00 3	0.42 3	1.19 3	1.44 6	2.48 6	3.56 6	5.29 6	0.00 2	0.00 3	0.83 6	1.58 6	2.12 6	3.28 6	4.65 7	6.69 7	1.96 6	3.76 6	7.92	2.15 6	4.22 6	8.73
	24	0.00 1	0.00 2	0.00 2	0.00 2	0.00 2	0.74 2	1.21 3	2.79 3	0.00 2	0.00 2	0.00 2	0.07 2	0.11 3	1.26 3	1.94 3	3.86 3	0.00 2	0.00 2	0.00 3	0.28 3	0.67 3	1.91 3	2.91 6	5.14 6	0.52 3	2.16 3	6.19 6	0.68 3	2.53 6	6.76 6

Wall Ht. (ft)	Spacing (in) o.c.	600S137-mils (Fy)								600S162-mils (Fy)								600S200-mils (Fy)								600S250-mils (Fy)			600S300-mils (Fy)		
		-33 (33)	-43 (33)	-54 (33)	-54 (50)	-68 (33)	-68 (50)	-97 (33)	-97 (50)	-33 (33)	-43 (33)	-54 (33)	-54 (50)	-68 (33)	-68 (50)	-97 (33)	-97 (50)	-33 (33)	-43 (33)	-54 (33)	-54 (50)	-68 (33)	-68 (50)	-97 (33)	-97 (50)	-54 (50)	-68 (50)	-97 (50)	-54 (50)	-68 (50)	-97 (50)
8	12	1.19	1.95	2.81	3.34	4.03	4.58	6.37	7.14	1.73	2.77	3.92	5.02	5.46	6.87	8.73	10.83	2.15	3.56	5.04	6.71	7.00	9.27	11.31	14.95	6.92	10.27	17.50	7.22	10.44	18.66
	16	0.97	1.73	2.59	3.15	3.83	4.40	6.16	6.99	1.47	2.53	3.68	4.79	5.22	6.65	8.47	10.61	1.88	3.27	4.77	6.42	6.73	9.00	11.01	14.67	6.63	9.96	17.19	6.93	10.14	18.32
	24	0.53	1.30	2.16	2.78	3.45	4.04	5.74	6.67	0.95	2.05	3.21	4.33	4.75	6.21	7.95	10.17	1.34	2.69	4.23	5.84	6.19	8.45	10.42	14.12	6.07	9.35	16.58	6.37	9.55	17.65
9	12	1.01	1.76	2.62	3.17	3.86	4.42	6.18	7.00	1.51	2.56	3.71	4.81	5.25	6.67	8.49	10.62	1.90	3.27	4.76	6.35	6.70	8.89	10.93	14.48	6.58	9.84	16.91	6.88	10.03	18.02
	16	0.73	1.48	2.34	2.93	3.61	4.18	5.91	6.80	1.18	2.25	3.40	4.51	4.94	6.38	8.15	10.34	1.56	2.91	4.41	5.98	6.35	8.54	10.55	14.12	6.22	9.45	16.51	6.52	9.65	17.59
	24	0.19	0.95	1.80	2.47	3.12	3.72	5.38	6.39	0.54	1.65	2.81	3.94	4.34	5.81	7.49	9.77	0.90	2.20	3.74	5.26	5.67	7.85	9.79	13.42	5.52	8.68	15.73	5.81	8.91	16.73
10	12	0.80	1.55	2.41	2.98	3.66	4.23	5.96	6.83	1.26	2.32	3.47	4.57	5.00	6.42	8.21	10.37	1.63	2.96	4.43	5.94	6.34	8.45	10.49	13.91	6.20	9.35	16.22	6.49	9.56	17.28
	16	0.47	1.22	2.07	2.69	3.35	3.94	5.63	6.58	0.86	1.94	3.09	4.20	4.62	6.06	7.79	10.01	1.22	2.51	4.01	5.49	5.92	8.01	10.01	13.47	5.75	8.86	15.72	6.05	9.10	16.74
	24	0.00 6	0.57	1.41	2.12	2.75	3.37	4.97	6.07	0.11 7	1.22	2.37	3.49	3.89	5.36	6.96	9.30	0.44	1.67	3.20	4.62	5.09	7.18	9.08	12.60	4.90	7.92	14.76	5.19	8.19	15.69
12	12	0.35 7	1.08	1.91	2.54	3.19	3.78	5.43	6.41	0.70	1.75	2.88	3.94	4.41	5.82	7.51	9.73	1.03	2.24	3.68	4.98	5.50	7.37	9.40	12.50	5.29	8.18	14.53	5.59	8.49	15.52
	16	0.00 6	0.63 7	1.45	2.13	2.75	3.36	4.94	6.03	0.19 6	1.24	2.36	3.43	3.87	5.30	6.90	9.18	0.50 7	1.66	3.11	4.37	4.91	6.77	8.72	11.86	4.69	7.51	13.82	4.98	7.83	14.75
	24	0.00 3	0.00 6	0.57 6	1.35 6	1.92 7	2.56 7	4.01	5.30	0.00 6	0.31 6	1.39 7	2.47 7	2.85	4.31	5.73	8.14	0.00 6	0.57 6	2.03	3.23	3.79	5.65	7.43	10.65	3.56	6.24	12.49	3.83	6.59	13.30
14	12	0.00 6	0.57 6	1.36 7	2.02 7	2.63	3.22	4.77	5.87	0.14 6	1.12 7	2.17	3.11	3.60	4.87	6.62	8.83	0.42 6	1.48	2.84	3.92	4.53	6.13	8.08	10.77	4.30	6.85	12.53	4.57	7.26	13.48
	16	0.00 3	0.01 6	0.77 6	1.50 6	2.07 7	2.68 7	4.12	5.35	0.00 6	0.52 6	1.53 6	2.49 6	2.92	4.21	5.81	8.09	0.00 6	0.79 6	2.14 7	3.19 7	3.79	5.39	7.22	9.97	3.56	6.02	11.64	3.82	6.43	12.50
	24	0.00 2	0.00 3	0.00 3	0.54 3	1.03 6	1.68 6	2.93 6	4.38 6	0.00 3	0.00 3	0.38 6	1.38 6	1.69 6	3.02 6	4.32 7	6.74 7	0.00 3	0.00 6	0.87 6	1.88 6	2.45 6	4.05 6	5.63	8.48	2.21 6	4.51 7	10.00	2.45 6	4.90 7	10.69
16	12	0.00 3	0.05 6	0.78 6	1.47 6	2.02 6	2.61 6	4.01	5.21	0.00 3	0.51 6	1.45 6	2.28 6	2.73 7	3.82 7	5.37	7.28	0.00 6	0.76 6	2.00 7	2.88 7	3.52	4.84	6.66	8.92	3.32 7	5.51	10.43	3.54	5.96	11.34
	16	0.00 2	0.00 3	0.10 3	0.85 3	1.35 6	1.95 6	3.23 6	4.56 6	0.00 3	0.00 3	0.74 6	1.60 6	1.96 6	3.09 6	4.44 7	6.44 7	0.00 3	0.01 6	1.22 6	2.09 6	2.68 6	4.03 6	5.66	8.00	2.47 6	4.57 7	9.40	2.69 6	4.99 7	10.20
	24	0.00 2	0.00 2	0.00 2	0.00 2	0.15 3	0.79 3	1.81 6	3.38 6	0.00 2	0.00 2	0.00 3	0.40 3	0.60 3	1.80 3	2.78 6	4.95 6	0.00 2	0.00 3	0.00 3	0.70 3	1.19 6	2.59 6	3.88 6	6.37 6	0.98 3	2.90 6	7.59 6	1.16 6	3.27 6	8.17 7

Wall Ht. (ft)	Spacing (in) o.c.	800S137-mils (Fy)								800S162-mils (Fy)								800S200-mils (Fy)								800S250-mils (Fy)			800S300-mils (Fy)		
		-33 (33)	-43 (33)	-54 (33)	-54 (50)	-68 (33)	-68 (50)	-97 (33)	-97 (50)	-33 (33)	-43 (33)	-54 (33)	-54 (50)	-68 (33)	-68 (50)	-97 (33)	-97 (50)	-33 (33)	-43 (33)	-54 (33)	-54 (50)	-68 (33)	-68 (50)	-97 (33)	-97 (50)	-54 (50)	-68 (50)	-97 (50)	-54 (50)	-68 (50)	-97 (50)
8	12	1.30	2.03	2.89	3.25	4.04	4.44	6.58	6.93	1.90	2.89	4.03	5.01	5.59	6.83	9.15	10.85	2.44	3.93	5.44	7.21	7.47	9.80	12.02	15.51	7.63	11.23	19.21	7.97	11.50	20.92
	16	1.14	1.88	2.74	3.12	3.89	4.32	6.45	6.81	1.71	2.70	3.85	4.84	5.41	6.67	8.98	10.69	2.23	3.71	5.24	6.99	7.27	9.60	11.82	15.33	7.42	11.00	18.99	7.75	11.28	20.67
	24	0.82	1.57	2.43	2.87	3.59	4.08	6.19	6.59	1.33	2.33	3.49	4.50	5.05	6.34	8.65	10.37	1.82	3.28	4.85	6.57	6.89	9.21	11.43	14.96	6.99	10.55	18.55	7.32	10.83	20.17
9	12	1.17	1.91	2.76	3.14	3.91	4.34	6.47	6.83	1.75	2.73	3.88	4.87	5.44	6.69	9.01	10.71	2.27	3.74	5.27	7.02	7.30	9.63	11.85	15.35	7.42	10.99	18.93	7.74	11.25	20.55
	16	0.96	1.71	2.57	2.98	3.72	4.18	6.30	6.68	1.50	2.50	3.65	4.65	5.21	6.48	8.79	10.51	2.01	3.47	5.02	6.75	7.05	9.38	11.59	15.11	7.14	10.70	18.65	7.47	10.96	20.22
	24	0.56	1.32	2.19	2.66	3.35	3.88	5.97	6.39	1.02	2.03	3.19	4.22	4.75	6.07	8.37	10.09	1.49	2.92	4.52	6.21	6.56	8.88	11.09	14.63	6.60	10.12	18.08	6.92	10.39	19.58
10	12	1.02	1.76	2.62	3.02	3.77	4.22	6.35	6.72	1.57	2.56	3.70	4.70	5.26	6.53	8.84	10.55	2.07	3.54	5.08	6.81	7.11	9.43	11.65	15.16	7.17	10.71	18.60	7.48	10.95	20.10
	16	0.77	1.52	2.38	2.83	3.54	4.03	6.14	6.54	1.27	2.27	3.42	4.43	4.98	6.27	8.57	10.29	1.75	3.20	4.77	6.47	6.80	9.12	11.33	14.85	6.83	10.35	18.24	7.14	10.60	19.70
	24	0.28	1.04	1.91	2.43	3.07	3.65	5.72	6.18	0.68	1.70	2.85	3.91	4.41	5.75	8.04	9.78	1.12	2.53	4.15	5.80	6.19	8.50	10.71	14.25	6.16	9.64	17.53	6.47	9.89	18.90
12	12	0.68	1.43	2.29	2.74	3.44	3.95	6.04	6.45	1.16	2.15	3.30	4.31	4.85	6.14	8.44	10.16	1.63	3.05	4.63	6.30	6.66	8.95	11.17	14.68	6.56	10.03	17.76	6.86	10.22	18.99
	16	0.33	1.09	1.95	2.46	3.10	3.67	5.74	6.19	0.74	1.74	2.89	3.93	4.44	5.76	8.05	9.77	1.17	2.57	4.17	5.81	6.21	8.49	10.70	14.22	6.08	9.50	17.23	6.38	9.71	18.41
	24	0.00 7	0.42	1.28	1.90	2.43	3.12	5.13	5.66	0.00	0.94	2.09	3.17	3.62	5.01	7.28	9.02	0.30	1.64	3.29	4.85	5.33	7.59	9.78	13.33	5.14	8.48	16.18	5.43	8.71	17.25
14	12	0.29	1.04	1.89	2.40	3.04	3.61	5.67	6.12	0.69	1.68	2.81	3.84	4.35	5.66	7.95	9.65	1.10	2.46	4.04	5.59	6.07	8.29	10.57	14.05	5.82	9.12	16.56	6.11	9.32	17.58
	16	0.00 7	0.59	1.44	2.02	2.58	3.24	5.25	5.76	0.15 7	1.14	2.26	3.32	3.79	5.14	7.41	9.12	0.52	1.83	3.44	4.94	5.46	7.66	9.92	13.41	5.18	8.42	15.84	5.47	8.64	16.79
	24	0.00 6	0.00 6	0.58 7	1.28 7	1.70	2.50	4.43	5.04	0.00 6	0.12 7	1.22	2.33	2.71	4.14	6.35	8.08	0.00 6	0.64	2.29	3.69	4.29	6.45	8.66	12.17	3.96	7.07	14.43	4.23	7.32	15.25
16	12	0.00 6	0.61	1.45	2.02	2.57	3.22	5.22	5.73	0.19 7	1.15	2.26	3.29	3.76	5.09	7.35	9.03	0.54	1.79	3.33	4.71	5.29	7.30	9.66	12.92	4.98	8.03	15.00	5.26	8.28	15.93
	16	0.00 6	0.06 6	0.88 7	1.53 7	1.99	2.73	4.67	5.24	0.00 6	0.49 7	1.58	2.63	3.05	4.42	6.64	8.33	0.00 6	1.03	2.59	3.91	4.53	6.52	8.83	12.09	4.19	7.15	14.08	4.46	7.43	14.93
	24	0.00 3	0.00 6	0.00 6	0.61 6	0.90 6	1.81 6	3.63	4.31	0.00 3	0.00 6	0.31 6	1.41 6	1.72 7	3.16 7	5.29	6.99	0.00 6	0.00 6	1.22 7	2.43 7	3.10	5.06	7.25	10.53	2.73 7	5.52	12.33	2.97 7	5.82	13.02

TELLING

ALLOWABLE AXIAL LOAD TABLES

35 PSF LATERAL LOAD

Wall Ht. (ft)	Spacing (in) o.c.	350S137-mils (Fy)								350S162-mils (Fy)							
		-33 (33)	-43 (33)	-54 (33)	-54 (50)	-68 (33)	-68 (50)	-97 (33)	-97 (50)	-33 (33)	-43 (33)	-54 (33)	-54 (50)	-68 (33)	-68 (50)	-97 (33)	-97 (50)
8	12	0.34 6	0.90 7	1.48	2.11	2.41	3.04	3.88	4.96	0.60 7	1.30	2.01	2.81	3.06	3.90	4.89	6.33
	16	0.00 6	0.51 6	1.06 7	1.75 7	2.01	2.66	3.45	4.60	0.20 6	0.87 7	1.55	2.41	2.62	3.49	4.43	5.92
	24	0.00 3	0.00 3	0.28 6	1.10 6	1.27 6	1.96 6	2.65 7	3.91 7	0.00 3	0.11 6	0.72 6	1.68 6	1.82 7	2.73 7	3.55	5.15
9	12	0.05 6	0.55 6	1.07 7	1.68 7	1.96	2.52	3.42	4.51	0.26 6	0.89 6	1.53 7	2.28 7	2.53	3.27	4.22	5.49
	16	0.00 3	0.12 6	0.59 6	1.28 6	1.50 6	2.09 6	2.91	4.06	0.00 3	0.42 6	1.01 6	1.83 6	2.03 7	2.80 7	3.68	5.01
	24	0.00 2	0.00 3	0.00 3	0.56 3	0.67 6	1.31 6	1.97 6	3.24 6	0.00 2	0.00 3	0.10 3	1.04 3	1.13 6	1.96 6	2.69 6	4.14 6
10	12	0.00 3	0.22 6	0.67 6	1.26 6	1.51 6	2.00 6	2.82	3.78	0.00 3	0.51 6	1.07 6	1.77 6	2.01 7	2.65 7	3.54	4.63
	16	0.00 2	0.00 3	0.17 3	0.84 3	1.01 6	1.55 6	2.25 6	3.29 6	0.00 3	0.01 3	0.52 6	1.30 6	1.47 6	2.15 6	2.94 7	4.12 7
	24	0.00 2	0.00 2	0.00 2	0.09 2	0.13 3	0.74 3	1.25 6	2.43 6	0.00 2	0.00 2	0.00 3	0.47 3	0.51 3	1.27 3	1.86 6	3.20 6
12	12	0.00 2	0.00 2	0.01 3	0.57 3	0.71 3	1.12 3	1.71 6	2.45 6	0.00 2	0.00 3	0.29 3	0.91 3	1.08 6	1.58 6	2.27 6	3.10 6
	16	0.00 2	0.00 2	0.00 2	0.14 2	0.19 2	0.65 2	1.11 3	1.96 3	0.00 2	0.00 2	0.00 2	0.45 2	0.51 3	1.07 3	1.63 6	2.57 6
	24	0.00 1	0.00 1	0.00 2	0.00 2	0.00 2	0.00 2	0.08 2	1.11 2	0.00 1	0.00 2	0.00 2	0.00 2	0.00 2	0.21 2	0.51 3	1.65 3
14	12	0.00 1	0.00 2	0.00 2	0.08 2	0.12 2	0.49 2	0.85 3	1.49 3	0.00 1	0.00 2	0.00 2	0.32 2	0.37 2	0.82 2	1.27 3	1.97 3
	16	0.00 1	0.00 1	0.00 2	0.00 2	0.00 2	0.05 2	0.28 2	1.03 2	0.00 1	0.00 1	0.00 2	0.00 2	0.00 2	0.34 2	0.65 2	1.47 2
	24	0.00 1	0.00 1	0.00 1	0.00 1	0.00 1	0.00 1	0.00 2	0.24 2	0.00 1	0.00 1	0.00 1	0.00 1	0.00 1	0.00 1	0.00 2	0.61 2
16	12	0.00 1	0.00 1	0.00 1	0.00 1	0.00 2	0.07 2	0.26 2	0.85 2	0.00 1	0.00 1	0.00 2	0.00 2	0.00 2	0.30 2	0.55 2	1.20 2
	16	0.00 1	0.00 1	0.00 1	0.00 1	0.00 1	0.00 1	0.00 2	0.42 2	0.00 1	0.00 1	0.00 1	0.00 1	0.00 1	0.00 1	0.00 2	0.74 2
	24	0.00 1	0.00 1	0.00 1	0.00 1	0.00 1	0.00 1	0.00 1	0.00 1	0.00 1	0.00 1	0.00 1	0.00 1	0.00 1	0.00 1	0.00 1	0.00 1

Wall Ht. (ft)	Spacing (in) o.c.	350S200-mils (Fy)								350S250-mils (Fy)			350S300-mils (Fy)		
		-33 (33)	-43 (33)	-54 (33)	-54 (50)	-68 (33)	-68 (50)	-97 (33)	-97 (50)	-54 (50)	-68 (50)	-97 (50)	-54 (50)	-68 (50)	-97 (50)
8	12	0.85	1.79	2.72	3.62	3.93	5.02	6.10	7.84	4.17	5.89	9.19	4.29	6.34	10.20
	16	0.41 6	1.33	2.23	3.16	3.47	4.57	5.61	7.41	3.68	5.38	8.74	3.81	5.83	9.69
	24	0.00 6	0.48 6	1.34 6	2.32 6	2.60	3.73	4.68	6.59	2.76 7	4.43	7.87	2.91	4.86	8.72
9	12	0.46 6	1.32 7	2.16	2.97	3.32	4.25	5.33	6.85	3.51	5.01	8.09	3.64	5.47	9.11
	16	0.00 6	0.80 6	1.61 7	2.46 7	2.78	3.74	4.75	6.34	2.94	4.43	7.55	3.08	4.88	8.50
	24	0.00 3	0.00 3	0.62 6	1.54 6	1.80 6	2.81 6	3.69 7	5.41 7	1.92 6	3.38 7	6.55	2.07 6	3.78 7	7.35
10	12	0.10 6	0.87 6	1.63 7	2.34 7	2.71	3.50	4.54	5.84	2.83 7	4.14	6.96	2.99	4.61	7.86
	16	0.00 3	0.32 6	1.04 6	1.80 6	2.12 6	2.95 6	3.90	5.29	2.22 6	3.52 7	6.37	2.38 6	3.96	7.18
	24	0.00 2	0.00 3	0.00 3	0.85 3	1.07 6	1.97 6	2.74 6	4.29 6	1.14 3	2.41 6	5.29 7	1.28 6	2.78 6	5.94 7
12	12	0.00 2	0.13 3	0.71 3	1.28 3	1.60 6	2.18 6	3.06 6	4.01 6	1.60 6	2.63 6	4.88 7	1.84 6	3.08 6	5.53
	16	0.00 2	0.00 2	0.09 3	0.75 3	0.98 3	1.63 3	2.36 6	3.43 6	0.99 3	1.99 6	4.26 6	1.17 3	2.37 6	4.81 6
	24	0.00 1	0.00 2	0.00 2	0.00 2	0.00 2	0.66 2	1.14 3	2.42 3	0.00 2	0.89 3	3.15 3	0.02 2	1.15 3	3.52 6
14	12	0.00 2	0.00 2	0.03 2	0.55 2	0.75 3	1.24 3	1.86 6	2.65 6	0.74 3	1.53 3	3.31 6	0.91 3	1.84 6	3.76 6
	16	0.00 1	0.00 2	0.00 2	0.05 2	0.14 2	0.72 2	1.17 3	2.10 3	0.16 2	0.92 3	2.70 3	0.26 2	1.16 3	3.05 6
	24	0.00 1	0.00 1	0.00 1	0.00 1	0.00 2	0.00 2	0.00 2	1.15 2	0.00 2	0.00 2	1.64 2	0.00 2	0.00 2	1.82 3
16	12	0.00 1	0.00 2	0.00 2	0.07 2	0.15 2	0.61 2	0.98 3	1.71 3	0.17 2	0.78 2	2.20 3	0.25 2	0.98 3	2.49 3
	16	0.00 1	0.00 1	0.00 1	0.00 1	0.00 2	0.12 2	0.34 2	1.19 2	0.00 2	0.22 2	1.62 2	0.00 2	0.34 2	1.82 3
	24	0.00 1	0.00 1	0.00 1	0.00 1	0.00 1	0.00 1	0.00 2	0.32 2	0.00 1	0.00 1	0.64 2	0.00 1	0.00 2	0.67 2

Wall Ht. (ft)	Spacing (in) o.c.	362S137-mils (Fy)								362S162-mils (Fy)							
		-33 (33)	-43 (33)	-54 (33)	-54 (50)	-68 (33)	-68 (50)	-97 (33)	-97 (50)	-33 (33)	-43 (33)	-54 (33)	-54 (50)	-68 (33)	-68 (50)	-97 (33)	-97 (50)
8	12	0.40 7	0.98	1.61	2.27	2.37	3.27	4.05	5.14	0.67 7	1.40	2.17	2.99	3.07	4.19	5.19	6.75
	16	0.03 6	0.59 6	1.19 7	1.91 7	1.91	2.88	3.63	4.79	0.27 6	0.98 7	1.71	2.59	2.58	3.77	4.73	6.34
	24	0.00 3	0.00 6	0.40 6	1.24 6	1.06 6	2.17 6	2.85	4.12	0.00 3	0.20 6	0.86 6	1.85 6	1.68 7	2.99 7	3.86	5.56
9	12	0.10 6	0.63 6	1.19 7	1.84 7	1.88	2.74	3.63	4.75	0.33 6	0.99 7	1.68	2.47	2.51	3.55	4.53	5.92
	16	0.00 3	0.19 6	0.71 6	1.43 6	1.36 7	2.30 7	3.12	4.31	0.00 6	0.52 6	1.16 6	2.02 6	1.95 7	3.07 7	3.98	5.43
	24	0.00 2	0.00 3	0.00 3	0.68 3	0.41 6	1.50 6	2.19 6	3.50 6	0.00 3	0.00 3	0.22 6	1.20 6	0.94 6	2.21 6	2.98 7	4.55 7
10	12	0.00 3	0.29 6	0.78 6	1.42 6	1.40 6	2.22 6	3.08	4.13	0.01 3	0.60 6	1.21 6	1.96 6	1.95 7	2.92 7	3.84	5.05
	16	0.00 2	0.00 3	0.26 6	0.97 6	0.83 6	1.74 6	2.50 6	3.63 6	0.00 3	0.10 3	0.65 6	1.47 6	1.34 6	2.40 6	3.23 7	4.52 7
	24	0.00 2	0.00 2	0.00 3	0.19 3	0.00 3	0.90 3	1.48 6	2.73 6	0.00 2	0.00 2	0.00 3	0.61 3	0.26 3	1.48 3	2.13 6	3.57 6
12	12	0.00 2	0.00 2	0.09 3	0.68 3	0.55 3	1.28 3	1.94 6	2.74 6	0.00 2	0.00 3	0.40 3	1.06 3	0.96 6	1.78 6	2.54 6	3.45 6
	16	0.00 2	0.00 2	0.00 2	0.22 2	0.00 3	0.79 3	1.31 3	2.23 3	0.00 2	0.00 2	0.00 3	0.56 3	0.32 3	1.25 3	1.87 6	2.89 6
	24	0.00 1	0.00 1	0.00 2	0.00 2	0.00 2	0.00 2	0.24 2	1.33 2	0.00 1	0.00 2	0.00 2	0.00 2	0.00 2	0.34 2	0.71 3	1.92 3
14	12	0.00 1	0.00 2	0.00 2	0.15 2	0.00 2	0.60 2	1.02 3	1.71 3	0.00 2	0.00 2	0.00 2	0.41 2	0.22 3	0.96 3	1.48 3	2.23 3
	16	0.00 1	0.00 1	0.00 2	0.00 2	0.00 2	0.13 2	0.42 2	1.22 2	0.00 1	0.00 2	0.00 2	0.00 2	0.00 2	0.45 2	0.82 3	1.70 3
	24	0.00 1	0.00 1	0.00 1	0.00 1	0.00 1	0.00 1	0.00 2	0.38 2	0.00 1	0.00 1	0.00 1	0.00 1	0.00 2	0.00 2	0.00 2	0.79 2
16	12	0.00 1	0.00 1	0.00 1	0.00 1	0.00 2	0.14 2	0.37 2	1.00 2	0.00 1	0.00 1	0.00 2	0.00 2	0.00 2	0.39 2	0.70 2	1.39 2
	16	0.00 1	0.00 1	0.00 1	0.00 1	0.00 1	0.00 1	0.00 2	0.55 2	0.00 1	0.00 1	0.00 1	0.00 1	0.00 2	0.00 2	0.09 2	0.90 2
	24	0.00 1	0.00 1	0.00 1	0.00 1	0.00 1	0.00 1	0.00 1	0.00 1	0.00 1	0.00 1	0.00 1	0.00 1	0.00 1	0.00 1	0.00 1	0.05 1

Wall Ht. (ft)	Spacing (in) o.c.	362S200-mils (Fy)								362S250-mils (Fy)			362S300-mils (Fy)		
		-33 (33)	-43 (33)	-54 (33)	-54 (50)	-68 (33)	-68 (50)	-97 (33)	-97 (50)	-54 (50)	-68 (50)	-97 (50)	-54 (50)	-68 (50)	-97 (50)
8	12	0.93	1.92	2.90	3.85	4.19	5.38	6.45	8.36	4.40	6.31	9.79	4.52	6.73	10.77
	16	0.49 7	1.45	2.41	3.39	3.72	4.92	5.96	7.92	3.91	5.79	9.33	4.04	6.21	10.26
	24	0.00 6	0.60 6	1.51 7	2.54 7	2.85	4.06	5.04	7.09	2.99	4.82	8.45	3.13	5.23	9.28
9	12	0.54 6	1.44	2.35	3.20	3.57	4.60	5.69	7.36	3.74	5.41	8.68	3.88	5.88	9.72
	16	0.05 6	0.92 6	1.79 7	2.68 7	3.03	4.07	5.11	6.85	3.17	4.82	8.14	3.32	5.27	9.10
	24	0.00 3	0.00 6	0.78 6	1.73 6	2.04 6	3.12 6	4.04	5.90	2.13 6	3.73 7	7.11	2.28 6	4.15	7.94
10	12	0.18 6	0.99 6	1.81 7	2.57 7	2.95	3.83	4.90	6.35	3.08	4.53	7.55	3.23	5.00	8.51
	16	0.00 3	0.43 6	1.20 6	2.01 6	2.35 7	3.26 7	4.25	5.78	2.45 6	3.88 7	6.93	2.61 7	4.33	7.81
	24	0.00 2	0.00 3	0.12 3	1.02 3	1.28 6	2.24 6	3.07 6	4.75 6	1.34 6	2.72 6	5.82 7	1.48 6	3.11 6	6.53
12	12	0.00 3	0.21 3	0.84 6	1.46 6	1.81 6	2.44 6	3.39 7	4.44 7	1.82 6	2.93 6	5.39	2.05 6	3.39 7	6.10
	16	0.00 2	0.00 2	0.20 3	0.90 3	1.16 3	1.86 3	2.66 6	3.83 6	1.17 3	2.27 6	4.73 6	1.35 6	2.66 6	5.34 7
	24	0.00 2	0.00 2	0.00 2	0.00 2	0.03 2	0.85 2	1.39 3	2.78 3	0.06 2	1.10 3	3.56 6	0.15 3	1.38 3	3.99 6
14	12	0.00 2	0.00 2	0.12 3	0.67 3	0.91 3	1.43 3	2.12 6	2.97 6	0.88 3	1.75 3	3.69 6	1.07 3	2.09 6	4.18 6
	16	0.00 1	0.00 2	0.00 2	0.13 2	0.27 2	0.87 2	1.40 3	2.39 3	0.27 2	1.10 3	3.05 3	0.38 2	1.37 3	3.44 6
	24	0.00 1	0.00 1	0.00 2	0.00 2	0.00 2	0.00 2	0.16 2	1.39 2	0.00 2	0.01 2	1.93 2	0.00 2	0.14 2	2.14 3
16	12	0.00 1	0.00 2	0.00 2	0.14 2	0.26 2	0.73 2	1.17 3	1.94 3	0.26 2	0.93 2	2.48 3	0.35 2	1.15 3	2.81 6
	16	0.00 1	0.00 1	0.00 2	0.00 2	0.00 2	0.22 2	0.50 2	1.40 2	0.00 2	0.33 2	1.87 2	0.00 2	0.48 2	2.10 3
	24	0.00 1	0.00 1	0.00 1	0.00 1	0.00 1	0.00 1	0.00 2	0.47 2	0.00 1	0.00 1	0.83 2	0.00 1	0.00 2	0.88 2

Wall Ht. (ft)	Spacing (in) o.c.	400S137-mils (Fy)								400S162-mils (Fy)							
		-33 (33)	-43 (33)	-54 (33)	-54 (50)	-68 (33)	-68 (50)	-97 (33)	-97 (50)	-33 (33)	-43 (33)	-54 (33)	-54 (50)	-68 (33)	-68 (50)	-97 (33)	-97 (50)
8	12	0.56	1.21	1.93	2.66	2.87	3.89	4.53	5.63	0.87	1.68	2.55	3.49	3.69	4.99	6.07	7.99
	16	0.20 6	0.83	1.51	2.29	2.41	3.50	4.15	5.31	0.47 7	1.26	2.10	3.09	3.20	4.57	5.62	7.58
	24	0.00 6	0.11 6	0.73 6	1.62 6	1.55	2.77	3.42	4.70	0.00 6	0.49 6	1.25 7	2.34 7	2.28	3.76	4.75	6.80
9	12	0.25 6	0.86 7	1.52	2.24	2.40	3.42	4.15	5.30	0.52 7	1.28	2.08	2.99	3.13	4.38	5.44	7.19
	16	0.00 6	0.42 6	1.03 7	1.82 7	1.85	2.95	3.67	4.89	0.07 6	0.79 6	1.55	2.52	2.55	3.87	4.89	6.70
	24	0.00 3	0.00 3	0.13 6	1.05 6	0.86 6	2.09 6	2.78 7	4.13 7	0.00 3	0.00 6	0.59 6	1.66 6	1.49 6	2.94 6	3.86	5.77
10	12	0.00 6	0.51 6	1.11 7	1.82 7	1.90	2.87	3.72	4.90	0.19 6	0.88 6	1.60 7	2.47 7	2.55	3.73	4.76	6.33
	16	0.00 3	0.02 6	0.56 6	1.35 6	1.29 6	2.35 6	3.15	4.41	0.00 3	0.35 6	1.02 6	1.95 6	1.91 7	3.17 7	4.13	5.76
	24	0.00 2	0.00 3	0.00 3	0.51 3	0.21 6	1.42 6	2.11 6	3.51 6	0.00 2	0.00 3	0.00 3	1.02 3	0.75 6	2.15 6	2.98 6	4.73 6
12	12	0.00 2	0.00 3	0.34 3	1.02 3	0.95 6	1.82 6	2.65 6	3.71 6	0.00 3	0.16 3	0.72 6	1.49 6	1.46 6	2.47 6	3.38 7	4.59 7
	16	0.00 2	0.00 2	0.00 3	0.50 3	0.28 3	1.26 3	1.97 6	3.12 6	0.00 2	0.00 3	0.07 3	0.93 3	0.75 6	1.86 6	2.65 6	3.96 6
	24	0.00 1	0.00 2	0.00 2	0.00 2	0.00 2	0.28 2	0.78 3	2.09 3	0.00 2	0.00 2	0.00 2	0.00 2	0.00 3	0.79 3	1.37 3	2.85 3
14	12	0.00 2	0.00 2	0.00 2	0.38 2	0.19 3	0.98 3	1.59 6	2.44 6	0.00 2	0.00 2	0.02 3	0.72 3	0.57 3	1.44 3	2.16 6	3.11 6
	16	0.00 1	0.00 2	0.00 2	0.00 2	0.00 2	0.43 2	0.91 3	1.87 3	0.00 2	0.00 2	0.00 2	0.17 2	0.00 2	0.85 2	1.42 3	2.49 3
	24	0.00 1	0.00 1	0.00 1	0.00 1	0.00 2	0.00 2	0.00 2	0.89 2	0.00 1	0.00 1	0.00 2	0.00 2	0.00 2	0.00 2	0.14 2	1.43 2
16	12	0.00 1	0.00 2	0.00 2	0.00 2	0.00 2	0.38 2	0.79 3	1.53 3	0.00 1	0.00 2	0.00 2	0.18 2	0.00 2	0.72 2	1.21 3	2.03 3
	16	0.00 1	0.00 1	0.00 1	0.00 1	0.00 2	0.00 2	0.13 2	0.99 2	0.00 1	0.00 1	0.00 2	0.00 2	0.00 2	0.17 2	0.50 2	1.45 2
	24	0.00 1	0.00 1	0.00 1	0.00 1	0.00 1	0.00 1	0.00 2	0.09 2	0.00 1	0.00 1	0.00 1	0.00 1	0.00 1	0.00 1	0.00 2	0.46 2

Wall Ht. (ft)	Spacing (in) o.c.	400S200-mils (Fy)								400S250-mils (Fy)			400S300-mils (Fy)		
		-33 (33)	-43 (33)	-54 (33)	-54 (50)	-68 (33)	-68 (50)	-97 (33)	-97 (50)	-54 (50)	-68 (50)	-97 (50)	-54 (50)	-68 (50)	-97 (50)
8	12	1.16	2.26	3.36	4.48	4.74	6.34	7.48	9.87	4.95	7.26	11.53	5.12	7.65	12.48
	16	0.72	1.80	2.88	4.02	4.22	5.88	7.00	9.43	4.47	6.75	11.07	4.65	7.14	11.97
	24	0.00 6	0.95 7	1.98	3.15	3.25	5.00	6.08	8.60	3.57	5.78	10.18	3.76	6.18	11.00
9	12	0.77 7	1.79	2.82	3.84	4.10	5.60	6.75	8.90	4.37	6.50	10.45	4.51	6.92	11.41
	16	0.27 6	1.26 7	2.26	3.31	3.49	5.04	6.17	8.37	3.80	5.89	9.88	3.95	6.30	10.79
	24	0.00 3	0.30 6	1.24 6	2.32 6	2.37 7	4.03 7	5.08	7.38	2.74 7	4.75	8.82	2.91	5.15	9.61
10	12	0.39 6	1.33 7	2.28	3.20	3.44	4.81	5.97	7.87	3.72	5.66	9.30	3.88	6.14	10.29
	16	0.00 6	0.74 6	1.65 7	2.61 7	2.76	4.20	5.30	7.27	3.08	4.96	8.65	3.24	5.42	9.56
	24	0.00 3	0.00 3	0.53 6	1.54 6	1.52 6	3.08 6	4.07 7	6.16 7	1.91 6	3.69 6	7.44	2.07 6	4.12 7	8.21
12	12	0.00 3	0.49 6	1.26 6	2.01 6	2.18 6	3.30 6	4.38	5.82	2.46 6	3.93 7	6.99	2.62 7	4.40	7.89
	16	0.00 2	0.00 3	0.56 6	1.37 6	1.41 6	2.63 6	3.60 7	5.14 7	1.73 6	3.16 6	6.24 7	1.89 6	3.58 6	7.03
	24	0.00 2	0.00 2	0.00 3	0.26 3	0.07 3	1.45 3	2.21 6	3.93 6	0.47 3	1.81 3	4.91 6	0.60 3	2.15 6	5.49 6
14	12	0.00 2	0.00 3	0.42 3	1.07 3	1.13 6	2.05 6	2.96 6	4.05 6	1.36 3	2.48 6	4.96 6	1.56 6	2.91 6	5.61 7
	16	0.00 2	0.00 2	0.00 2	0.44 2	0.35 3	1.40 3	2.15 6	3.37 6	0.65 3	1.73 3	4.21 6	0.79 3	2.08 6	4.74 6
	24	0.00 1	0.00 2	0.00 2	0.00 2	0.00 2	0.28 2	0.75 3	2.21 3	0.00 2	0.44 2	2.91 3	0.00 2	0.65 3	3.23 3
16	12	0.00 2	0.00 2	0.00 2	0.40 2	0.34 3	1.16 3	1.82 3	2.74 3	0.57 2	1.43 3	3.43 6	0.71 3	1.74 3	3.87 6
	16	0.00 1	0.00 2	0.00 2	0.00 2	0.00 2	0.55 2	1.04 3	2.10 3	0.00 2	0.73 2	2.71 3	0.00 2	0.95 3	3.04 3
	24	0.00 1	0.00 1	0.00 1	0.00 1	0.00 2	0.00 2	0.00 2	1.01 2	0.00 1	0.00 2	1.50 2	0.00 2	0.00 2	1.63 2

Wall Ht. (ft)	Spacing (in) o.c.	550S137-mils (Fy)								550S162-mils (Fy)							
		-33 (33)	-43 (33)	-54 (33)	-54 (50)	-68 (33)	-68 (50)	-97 (33)	-97 (50)	-33 (33)	-43 (33)	-54 (33)	-54 (50)	-68 (33)	-68 (50)	-97 (33)	-97 (50)
8	12	1.01	1.83	2.70	3.26	3.83	4.53	6.08	6.98	1.49	2.54	3.70	4.83	5.20	6.68	8.34	10.54
	16	0.73	1.57	2.44	3.04	3.57	4.31	5.80	6.76	1.16	2.23	3.39	4.53	4.88	6.38	7.99	10.25
	24	0.18	1.05	1.94	2.59	3.06	3.87	5.25	6.34	0.52	1.63	2.78	3.94	4.26	5.80	7.31	9.66
9	12	0.77	1.60	2.47	3.06	3.60	4.33	5.82	6.78	1.20	2.25	3.41	4.53	4.91	6.40	8.02	10.25
	16	0.43	1.28	2.15	2.77	3.27	4.05	5.47	6.50	0.80	1.87	3.02	4.15	4.51	6.02	7.57	9.86
	24	0.00 6	0.65	1.52	2.21	2.63	3.50	4.77	5.96	0.03 7	1.13	2.27	3.41	3.73	5.28	6.71	9.11
10	12	0.52	1.35	2.22	2.83	3.33	4.10	5.53	6.54	0.89	1.93	3.07	4.14	4.58	6.06	7.64	9.90
	16	0.11 7	0.96	1.83	2.48	2.93	3.75	5.09	6.20	0.42 7	1.48	2.60	3.69	4.08	5.59	7.08	9.41
	24	0.00 6	0.22 6	1.08 7	1.80 7	2.15	3.08	4.23	5.53	0.00 6	0.61 7	1.71	2.82	3.14	4.69	6.02	8.47
12	12	0.00 6	0.81 7	1.64	2.29	2.72	3.54	4.82	5.96	0.25 6	1.24 7	2.30	3.27	3.69	5.04	6.70	8.98
	16	0.00 3	0.29 6	1.11 6	1.81 6	2.16 7	3.05 7	4.19	5.46	0.00 6	0.66 6	1.69 7	2.68 7	3.04	4.41	5.92	8.26
	24	0.00 2	0.00 3	0.14 6	0.92 6	1.13 6	2.14 6	3.03 7	4.51 7	0.00 3	0.00 3	0.57 6	1.59 6	1.83 6	3.26 6	4.48	6.95
14	12	0.00 3	0.24 6	1.02 6	1.68 6	2.02 6	2.88 6	3.98	5.22	0.00 3	0.56 6	1.50 6	2.35 6	2.73 7	3.91 7	5.35	7.33
	16	0.00 2	0.00 3	0.38 3	1.09 3	1.33 6	2.27 6	3.18 6	4.57 6	0.00 3	0.00 3	0.78 6	1.67 6	1.96 6	3.18 6	4.42 7	6.49 7
	24	0.00 2	0.00 2	0.00 2	0.04 2	0.11 3	1.17 3	1.76 6	3.38 6	0.00 2	0.00 2	0.00 3	0.47 3	0.58 3	1.88 3	2.74 6	4.98 6
16	12	0.00 2	0.00 3	0.39 3	1.03 3	1.30 6	2.16 6	3.06 6	4.38 6	0.00 2	0.00 3	0.75 6	1.50 6	1.81 6	2.82 6	4.00 7	5.69 7
	16	0.00 2	0.00 2	0.00 3	0.39 3	0.52 3	1.46 3	2.15 6	3.59 6	0.00 2	0.00 2	0.00 3	0.79 3	0.97 3	2.05 3	2.99 6	4.79 6
	24	0.00 1	0.00 2	0.00 2	0.00 2	0.00 2	0.25 2	0.55 3	2.23 3	0.00 1	0.00 2	0.00 2	0.00 2	0.00 2	0.72 2	1.22 3	3.22 3

Wall Ht. (ft)	Spacing (in) o.c.	550S200-mils (Fy)								550S250-mils (Fy)			550S300-mils (Fy)		
		-33 (33)	-43 (33)	-54 (33)	-54 (50)	-68 (33)	-68 (50)	-97 (33)	-97 (50)	-54 (50)	-68 (50)	-97 (50)	-54 (50)	-68 (50)	-97 (50)
8	12	1.87	3.22	4.67	6.22	6.56	8.70	10.62	14.10	6.47	9.64	16.45	6.76	9.84	17.54
	16	1.53	2.85	4.33	5.85	6.21	8.35	10.24	13.75	6.11	9.25	16.06	6.40	9.46	17.11
	24	0.87	2.14	3.65	5.13	5.53	7.67	9.48	13.05	5.41	8.49	15.29	5.70	8.73	16.28
9	12	1.57	2.86	4.31	5.77	6.17	8.21	10.13	13.49	6.04	9.10	15.71	6.33	9.33	16.75
	16	1.15	2.41	3.88	5.31	5.73	7.77	9.64	13.04	5.60	8.61	15.22	5.89	8.86	16.21
	24	0.35	1.54	3.05	4.43	4.89	6.92	8.68	12.15	4.73	7.66	14.24	5.02	7.93	15.16
10	12	1.24	2.47	3.91	5.26	5.72	7.65	9.56	12.77	5.57	8.50	14.86	5.86	8.78	15.86
	16	0.74	1.94	3.39	4.71	5.19	7.12	8.96	12.21	5.03	7.90	14.24	5.32	8.20	15.19
	24	0.00 6	0.93 7	2.40	3.67	4.18	6.10	7.79	11.14	4.00	6.76	13.06	4.28	7.09	13.91
12	12	0.55 7	1.64	3.00	4.13	4.70	6.36	8.20	11.03	4.50	7.11	12.84	4.79	7.50	13.79
	16	0.00 6	0.96 7	2.33	3.43	3.99	5.66	7.37	10.27	3.79	6.32	12.00	4.07	6.71	12.87
	24	0.00 3	0.00 6	1.09 6	2.15 6	2.68 7	4.36 7	5.84	8.84	2.48 6	4.85 7	10.43	2.74 7	5.24	11.16
14	12	0.00 6	0.82 6	2.07 7	2.98 7	3.59	4.97	6.66	9.06	3.42	5.64	10.60	3.65	6.09	11.51
	16	0.00 3	0.05 6	1.28 6	2.19 6	2.75 6	4.15 6	5.67	8.15	2.58 6	4.70 7	9.59	2.80 6	5.14	10.39
	24	0.00 2	0.00 3	0.00 3	0.78 3	1.25 6	2.70 6	3.88 6	6.51 6	1.08 6	3.03 6	7.78 7	1.27 6	3.41 6	8.38 7
16	12	0.00 3	0.10 3	1.20 6	1.95 6	2.52 6	3.66 6	5.13 7	7.12 7	2.36 6	4.21 7	8.40	2.56 6	4.69 7	9.27
	16	0.00 2	0.00 3	0.36 3	1.12 3	1.61 6	2.80 6	4.04 6	6.14 6	1.45 6	3.20 6	7.31 7	1.64 6	3.63 6	8.04 7
	24	0.00 2	0.00 2	0.00 2	0.00 2	0.03 3	1.31 3	2.13 3	4.44 3	0.00 3	1.45 3	5.41 6	0.02 3	1.78 3	5.88 6

Wall Ht. (ft)	Spacing (in) o.c.	600S137-mils (Fy)								600S162-mils (Fy)							
		-33 (33)	-43 (33)	-54 (33)	-54 (50)	-68 (33)	-68 (50)	-97 (33)	-97 (50)	-33 (33)	-43 (33)	-54 (33)	-54 (50)	-68 (33)	-68 (50)	-97 (33)	-97 (50)
8	12	1.08	1.84	2.70	3.24	3.93	4.49	6.26	7.06	1.60	2.65	3.80	4.90	5.34	6.76	8.60	10.72
	16	0.82	1.58	2.45	3.02	3.70	4.28	6.02	6.88	1.30	2.36	3.52	4.64	5.06	6.50	8.29	10.47
	24	0.32	1.09	1.95	2.60	3.25	3.86	5.53	6.52	0.70	1.81	2.97	4.11	4.52	5.99	7.69	9.96
9	12	0.87	1.62	2.48	3.05	3.73	4.30	6.05	6.90	1.34	2.40	3.55	4.66	5.09	6.52	8.32	10.48
	16	0.55	1.30	2.16	2.78	3.44	4.03	5.73	6.66	0.96	2.05	3.20	4.32	4.74	6.19	7.93	10.15
	24	0.00 7	0.69	1.54	2.24	2.87	3.50	5.12	6.19	0.24	1.36	2.52	3.66	4.05	5.53	7.16	9.49
10	12	0.63	1.38	2.24	2.84	3.51	4.08	5.79	6.70	1.06	2.13	3.28	4.38	4.81	6.24	8.00	10.19
	16	0.25	1.00	1.85	2.50	3.15	3.75	5.40	6.41	0.61	1.70	2.85	3.96	4.37	5.82	7.51	9.77
	24	0.00 6	0.27 7	1.10	1.84	2.45	3.09	4.64	5.82	0.00 6	0.88	2.02	3.15	3.53	5.01	6.56	8.95
12	12	0.13 6	0.85	1.68	2.33	2.97	3.56	5.18	6.22	0.44 7	1.49	2.62	3.68	4.14	5.55	7.20	9.45
	16	0.00 6	0.34 6	1.14 7	1.86 7	2.47	3.09	4.62	5.78	0.00 6	0.92 7	2.03	3.10	3.52	4.96	6.50	8.83
	24	0.00 3	0.00 6	0.16 6	0.98 6	1.52 6	2.18 6	3.56	4.95	0.00 3	0.00 6	0.93 6	2.03 6	2.37 7	3.84 7	5.17	7.65
14	12	0.00 6	0.28 6	1.06 6	1.75 6	2.35	2.95	4.44	5.61	0.00 6	0.81 6	1.84 7	2.80 7	3.25	4.53	6.21	8.45
	16	0.00 3	0.00 3	0.40 6	1.16 6	1.71 6	2.33 6	3.71	5.02	0.00 3	0.14 6	1.13 6	2.11 6	2.50 7	3.80 7	5.29	7.62
	24	0.00 2	0.00 2	0.00 3	0.10 3	0.54 6	1.21 6	2.37 6	3.93 6	0.00 2	0.00 3	0.00 3	0.86 3	1.12 6	2.47 6	3.63 6	6.11 6
16	12	0.00 3	0.00 3	0.43 6	1.15 6	1.68 6	2.27 6	3.61 7	4.88 7	0.00 3	0.17 6	1.08 6	1.93 6	2.34 6	3.45 6	4.90	6.85
	16	0.00 2	0.00 3	0.00 3	0.47 3	0.93 6	1.54 6	2.73 6	4.15 6	0.00 2	0.00 3	0.30 3	1.18 3	1.49 6	2.64 6	3.85 6	5.92 6
	24	0.00 2	0.00 2	0.00 2	0.00 2	0.00 3	0.26 3	1.18 3	2.85 3	0.00 2	0.00 2	0.00 2	0.00 2	0.00 3	1.22 3	2.02 6	4.28 6

Wall Ht. (ft)	Spacing (in) o.c.	600S200-mils (Fy)								600S250-mils (Fy)			600S300-mils (Fy)		
		-33 (33)	-43 (33)	-54 (33)	-54 (50)	-68 (33)	-68 (50)	-97 (33)	-97 (50)	-54 (50)	-68 (50)	-97 (50)	-54 (50)	-68 (50)	-97 (50)
8	12	2.01	3.41	4.91	6.56	6.87	9.13	11.16	14.81	6.78	10.12	17.34	7.07	10.29	18.49
	16	1.70	3.07	4.59	6.22	6.55	8.81	10.81	14.49	6.45	9.76	16.98	6.74	9.94	18.09
	24	1.07	2.41	3.96	5.55	5.92	8.18	10.12	13.85	5.79	9.05	16.27	6.09	9.26	17.32
9	12	1.73	3.09	4.59	6.17	6.52	8.72	10.74	14.30	6.40	9.64	16.71	6.69	9.84	17.80
	16	1.34	2.67	4.19	5.74	6.12	8.31	10.30	13.89	5.98	9.19	16.25	6.28	9.40	17.30
	24	0.58	1.85	3.41	4.90	5.34	7.52	9.42	13.07	5.17	8.30	15.35	5.46	8.54	16.31
10	12	1.42	2.73	4.22	5.71	6.13	8.23	10.25	13.69	5.97	9.10	15.97	6.27	9.33	17.01
	16	0.95	2.23	3.74	5.19	5.64	7.73	9.70	13.18	5.47	8.55	15.40	5.76	8.79	16.39
	24	0.06 7	1.26	2.80	4.19	4.69	6.77	8.63	12.18	4.49	7.47	14.28	4.77	7.74	15.18
12	12	0.76	1.94	3.39	4.67	5.20	7.07	9.06	12.18	4.99	7.84	14.17	5.28	8.16	15.13
	16	0.16 6	1.28	2.74	3.98	4.53	6.39	8.28	11.45	4.30	7.08	13.37	4.59	7.41	14.26
	24	0.00 6	0.06 6	1.52 7	2.70 7	3.26	5.11	6.82	10.08	3.02 7	5.64	11.85	3.29	5.99	12.60
14	12	0.10 6	1.13 7	2.48	3.55	4.16	5.75	7.64	10.36	3.92	6.43	12.08	4.19	6.84	12.98
	16	0.00 6	0.35 6	1.70 6	2.74 6	3.33	4.93	6.67	9.45	3.09 7	5.50	11.07	3.35 7	5.90	11.88
	24	0.00 3	0.00 3	0.29 6	1.28 6	1.82 6	3.44 6	4.90 7	7.80 7	1.58 6	3.80 6	9.24	1.81 6	4.19 7	9.86
16	12	0.00 3	0.38 6	1.60 6	2.47 6	3.09 7	4.43 7	6.15	8.45	2.89 6	5.03	9.90	3.10 7	5.47	10.76
	16	0.00 3	0.00 3	0.74 6	1.60 6	2.16 6	3.52 6	5.04 7	7.44 7	1.95 6	3.98 6	8.77	2.15 6	4.39 7	9.50
	24	0.00 2	0.00 2	0.00 3	0.08 3	0.52 3	1.94 3	3.07 6	5.64 6	0.31 3	2.14 6	6.76 6	0.47 3	2.49 6	7.25 6

Wall Ht. (ft)	Spacing (in) o.c.	800S137-mils (Fy)								800S162-mils (Fy)							
		-33 (33)	-43 (33)	-54 (33)	-54 (50)	-68 (33)	-68 (50)	-97 (33)	-97 (50)	-33 (33)	-43 (33)	-54 (33)	-54 (50)	-68 (33)	-68 (50)	-97 (33)	-97 (50)
8	12	1.22	1.96	2.81	3.19	3.96	4.38	6.52	6.87	1.81	2.79	3.94	4.92	5.50	6.75	9.06	10.77
	16	1.03	1.78	2.63	3.04	3.79	4.24	6.36	6.74	1.58	2.58	3.73	4.73	5.29	6.56	8.87	10.58
	24	0.66	1.42	2.28	2.75	3.44	3.96	6.06	6.47	1.14	2.15	3.31	4.34	4.87	6.18	8.48	10.21
9	12	1.06	1.81	2.67	3.06	3.82	4.26	6.39	6.76	1.62	2.61	3.76	4.76	5.32	6.59	8.90	10.61
	16	0.83	1.58	2.44	2.88	3.60	4.08	6.19	6.59	1.34	2.34	3.49	4.51	5.05	6.34	8.65	10.37
	24	0.36	1.13	2.00	2.51	3.16	3.73	5.80	6.25	0.78	1.80	2.96	4.01	4.52	5.86	8.15	9.89
10	12	0.89	1.64	2.50	2.92	3.66	4.13	6.24	6.63	1.42	2.41	3.56	4.57	5.12	6.4	8.71	10.42
	16	0.60	1.36	2.22	2.69	3.38	3.90	6.00	6.42	1.07	2.08	3.23	4.26	4.79	6.1	8.40	10.12
	24	0.03	0.81	1.68	2.24	2.84	3.46	5.52	6.00	0.40	1.42	2.57	3.65	4.13	5.5	7.78	9.52
12	12	0.50	1.26	2.12	2.60	3.27	3.81	5.89	6.32	0.95	1.94	3.09	4.12	4.64	5.95	8.25	9.96
	16	0.10	0.86	1.72	2.27	2.87	3.49	5.53	6.01	0.47	1.47	2.62	3.67	4.16	5.51	7.79	9.52
	24	0.00 6	0.10	0.96	1.62	2.11	2.86	4.84	5.40	0.00 7	0.56	1.70	2.81	3.23	4.65	6.90	8.65
14	12	0.07 7	0.81	1.67	2.21	2.81	3.42	5.46	5.94	0.42	1.40	2.54	3.58	4.07	5.4	7.68	9.39
	16	0.00 6	0.30 7	1.15	1.77	2.28	2.99	4.97	5.51	0.00 6	0.79	1.91	2.98	3.42	4.8	7.05	8.77
	24	0.00 3	0.00 6	0.16 6	0.92 6	1.27	2.15	4.03	4.68	0.00 6	0.00 6	0.72 7	1.85 7	2.19	3.65	5.84	7.58
16	12	0.00 6	0.33 7	1.16	1.77	2.28	2.98	4.95	5.48	0.00 6	0.81 7	1.91	2.96	3.40	4.75	6.99	8.68
	16	0.00 3	0.00 6	0.52 6	1.21 6	1.62	2.42	4.32	4.93	0.00 6	0.07 6	1.14 7	2.21 7	2.59	3.99	6.18	7.87
	24	0.00 2	0.00 3	0.00 6	0.18 6	0.38 6	1.37 6	3.13 7	3.86 7	0.00 3	0.00 3	0.00 6	0.84 6	1.09 6	2.57 6	4.65	6.36

Wall Ht. (ft)	Spacing (in) o.c.	800S200-mils (Fy)								800S250-mils (Fy)			800S300-mils (Fy)		
		-33 (33)	-43 (33)	-54 (33)	-54 (50)	-68 (33)	-68 (50)	-97 (33)	-97 (50)	-54 (50)	-68 (50)	-97 (50)	-54 (50)	-68 (50)	-97 (50)
8	12	2.34	3.82	5.34	7.10	7.37	9.70	11.92	15.42	7.53	11.12	19.10	7.86	11.39	20.79
	16	2.10	3.57	5.11	6.85	7.14	9.47	11.69	15.20	7.28	10.85	18.84	7.61	11.13	20.50
	24	1.62	3.07	4.65	6.36	6.69	9.02	11.23	14.77	6.78	10.32	18.33	7.11	10.61	19.92
9	12	2.14	3.61	5.15	6.89	7.18	9.50	11.72	15.23	7.28	10.85	18.79	7.60	11.10	20.38
	16	1.83	3.29	4.85	6.57	6.89	9.21	11.43	14.95	6.96	10.51	18.46	7.29	10.77	20.01
	24	1.23	2.66	4.27	5.94	6.32	8.63	10.84	14.39	6.34	9.84	17.79	6.65	10.11	19.26
10	12	1.91	3.37	4.92	6.64	6.96	9.27	11.49	15.00	7.00	10.53	18.42	7.31	10.77	19.90
	16	1.54	2.97	4.56	6.25	6.60	8.91	11.12	14.65	6.61	10.11	18.00	6.92	10.36	19.43
	24	0.81	2.20	3.84	5.47	5.89	8.19	10.39	13.96	5.83	9.28	17.18	6.14	9.55	18.51
12	12	1.40	2.81	4.40	6.05	6.43	8.72	10.94	14.45	6.32	9.77	17.49	6.62	9.97	18.70
	16	0.88	2.25	3.87	5.48	5.91	8.19	10.40	13.92	5.76	9.16	16.88	6.06	9.38	18.02
	24	0.00	1.18	2.86	4.38	4.90	7.15	9.33	12.90	4.68	7.98	15.67	4.96	8.22	16.69
14	12	0.81	2.14	3.74	5.26	5.76	7.97	10.24	13.73	5.50	8.77	16.20	5.79	8.98	17.19
	16	0.15 7	1.42	3.04	4.51	5.06	7.25	9.49	12.99	4.77	7.96	15.36	5.05	8.19	16.27
	24	0.00 6	0.08 7	1.73	3.10	3.73	5.87	8.05	11.58	3.38	6.42	13.75	3.64	6.69	14.51
16	12	0.19 7	1.40	2.96	4.30	4.90	6.91	9.24	12.50	4.58	7.59	14.53	4.86	7.85	15.42
	16	0.00 6	0.55 7	2.12	3.40	4.04	6.02	8.29	11.56	3.69	6.59	13.48	3.95	6.88	14.27
	24	0.00 3	0.00 6	0.57 6	1.75 6	2.42 7	4.37 7	6.49	9.79	2.04 6	4.75	11.51	2.27 7	5.05	12.11

ALLOWABLE AXIAL LOAD TABLES

40 PSF LATERAL LOAD

Wall Ht. (ft)	Spacing (in) o.c.	350S137-mils (Fy)								350S162-mils (Fy)								350S200-mils (Fy)								350S250-mils (Fy)			350S300-mils (Fy)		
		-33 (33)	-43 (33)	-54 (33)	-54 (50)	-68 (33)	-68 (50)	-97 (33)	-97 (50)	-33 (33)	-43 (33)	-54 (33)	-54 (50)	-68 (33)	-68 (50)	-97 (33)	-97 (50)	-33 (33)	-43 (33)	-54 (33)	-54 (50)	-68 (33)	-68 (50)	-97 (33)	-97 (50)	-54 (50)	-68 (50)	-97 (50)	-54 (50)	-68 (50)	-97 (50)
8	12	0.18 6	0.73 7	1.30	1.96	2.23	2.87	3.69	4.80	0.43 6	1.11 7	1.81	2.64	2.87	3.72	4.69	6.15	0.66 7	1.59	2.51	3.42	3.73	4.83	5.89	7.66	3.96	5.67	9.00	4.08	6.12	9.98
	16	0.00 6	0.30 6	0.83 6	1.56 6	1.79 7	2.45 7	3.22	4.40	0.00 6	0.65 6	1.30 7	2.20 7	2.39	3.26	4.17	5.69	0.17 6	1.08 7	1.97	2.91	3.21	4.32	5.34	7.17	3.41	5.10	8.48	3.54	5.54	9.41
	24	0.00 3	0.00 3	0.00 6	0.83 6	0.97 6	1.68 6	2.33 7	3.64 7	0.00 3	0.00 3	0.38 6	1.39 6	1.50 6	2.42 6	3.20	4.84	0.00 3	0.14 6	0.98 6	1.98 6	2.25 7	3.39 7	4.30	6.25	2.40 7	4.05	7.51	2.54 7	4.47	8.31
9	12	0.00 3	0.36 6	0.86 6	1.51 6	1.76 7	2.33 7	3.19	4.31	0.07 6	0.69 6	1.30 7	2.08 7	2.31	3.06	3.98	5.28	0.25 6	1.09 6	1.92	2.75	3.08	4.03	5.08	6.63	3.26	4.75	7.85	3.40	5.21	8.84
	16	0.00 3	0.00 3	0.34 6	1.06 6	1.25 6	1.86 6	2.63 7	3.82 7	0.00 3	0.17 6	0.74 6	1.60 6	1.77 6	2.55 6	3.38	4.75	0.00 3	0.52 6	1.32 6	2.18 6	2.49 7	3.46 7	4.44	6.06	2.64 7	4.12	7.25	2.78 7	4.55	8.16
	24	0.00 2	0.00 2	0.00 3	0.28 3	0.34 3	1.01 3	1.60 6	2.92 6	0.00 2	0.00 3	0.00 3	0.72 3	0.78 6	1.63 6	2.29 6	3.80 6	0.00 2	0.00 3	0.23 6	1.18 6	1.41 6	2.44 6	3.26 7	5.03 7	1.51 6	2.96 6	6.15	1.66 6	3.34 7	6.89
10	12	0.00 3	0.02 3	0.45 6	1.08 6	1.29 6	1.80 6	2.57 7	3.56 7	0.00 3	0.29 6	0.83 6	1.56 6	1.77 6	2.43 6	3.27	4.41	0.00 3	0.63 6	1.37 6	2.10 6	2.45 7	3.26 7	4.26	5.60	2.56 7	3.87	6.70	2.72 7	4.33	7.56
	16	0.00 2	0.00 2	0.00 3	0.61 3	0.74 3	1.30 3	1.95 6	3.03 6	0.00 2	0.00 3	0.23 3	1.05 3	1.18 6	1.89 6	2.62 6	3.84 6	0.00 3	0.03 3	0.72 6	1.51 6	1.80 6	2.65 6	3.55 7	4.99 7	1.89 6	3.19 6	6.05	2.05 6	3.61 7	6.81
	24	0.00 2	0.00 2	0.00 2	0.00 2	0.00 2	0.42 2	0.86 3	2.09 3	0.00 2	0.00 2	0.00 2	0.15 2	0.14 3	0.93 3	1.45 6	2.83 6	0.00 2	0.00 2	0.00 3	0.48 3	0.66 3	1.59 3	2.28 6	3.90 6	0.72 3	1.98 6	4.86 6	0.85 3	2.32 6	5.45 7
12	12	0.00 2	0.00 2	0.00 2	0.38 2	0.48 3	0.91 3	1.44 6	2.23 6	0.00 2	0.00 2	0.04 3	0.70 3	0.82 3	1.35 3	1.99 6	2.86 6	0.00 2	0.00 3	0.43 3	1.04 3	1.33 6	1.94 6	2.75 6	3.75 6	1.33 6	2.35 6	4.61 7	1.54 6	2.76 6	5.21 7
	16	0.00 1	0.00 2	0.00 2	0.00 2	0.00 2	0.41 2	0.80 3	1.70 3	0.00 2	0.00 2	0.00 2	0.20 2	0.21 3	0.81 3	1.29 3	2.29 3	0.00 2	0.00 2	0.00 2	0.46 2	0.65 3	1.33 3	1.99 6	3.13 6	0.67 3	1.65 3	3.92 6	0.82 3	2.00 6	4.42 6
	24	0.00 1	0.00 1	0.00 1	0.00 1	0.00 2	0.00 2	0.00 2	0.78 2	0.00 1	0.00 1	0.00 2	0.00 2	0.00 2	0.00 2	0.08 2	1.29 2	0.00 1	0.00 2	0.00 2	0.00 2	0.00 2	0.30 2	0.67 3	2.03 3	0.00 2	0.46 2	2.71 3	0.00 2	0.67 3	3.02 3
14	12	0.00 1	0.00 1	0.00 2	0.00 2	0.00 2	0.29 2	0.60 2	1.29 2	0.00 1	0.00 2	0.00 2	0.13 2	0.13 2	0.60 2	0.99 3	1.75 3	0.00 2	0.00 2	0.00 2	0.33 2	0.48 2	1.01 2	1.56 3	2.41 3	0.49 2	1.26 3	3.04 6	0.62 3	1.54 3	3.45 6
	16	0.00 1	0.00 1	0.00 1	0.00 1	0.00 2	0.00 2	0.00 2	0.79 2	0.00 1	0.00 1	0.00 2	0.00 2	0.00 2	0.09 2	0.32 2	1.21 2	0.00 1	0.00 1	0.00 2	0.00 2	0.00 2	0.45 2	0.82 3	1.81 3	0.00 2	0.61 2	2.38 3	0.00 2	0.81 2	2.68 3
	24	0.00 1	0.00 1	0.00 1	0.00 1	0.00 1	0.00 1	0.00 1	0.00 1	0.00 1	0.00 1	0.00 1	0.00 1	0.00 1	0.00 1	0.00 2	0.28 2	0.00 1	0.00 1	0.00 1	0.00 1	0.00 1	0.00 1	0.00 2	0.79 2	0.00 1	0.00 2	1.24 2	0.00 2	0.00 2	1.35 2
16	12	0.00 1	0.00 1	0.00 1	0.00 1	0.00 1	0.00 1	0.02 2	0.66 2	0.00 1	0.00 1	0.00 1	0.00 1	0.00 2	0.11 2	0.30 2	0.99 2	0.00 1	0.00 1	0.00 2	0.00 2	0.00 2	0.39 2	0.70 2	1.48 2	0.00 2	0.53 2	1.95 3	0.00 2	0.69 2	2.20 3
	16	0.00 1	0.00 1	0.00 1	0.00 1	0.00 1	0.00 1	0.00 1	0.20 1	0.00 1	0.00 1	0.00 1	0.00 1	0.00 1	0.00 1	0.00 2	0.49 2	0.00 1	0.00 1	0.00 1	0.00 1	0.00 2	0.00 2	0.01 2	0.93 2	0.00 1	0.00 2	1.32 2	0.00 2	0.01 2	1.47 2
	24	0.00 1	0.00 1	0.00 1	0.00 1	0.00 1	0.00 1	0.00 1	0.00 1	0.00 1	0.00 1	0.00 1	0.00 1	0.00 1	0.00 1	0.00 1	0.00 1	0.00 1	0.00 1	0.00 1	0.00 1	0.00 1	0.00 1	0.00 1	0.00 1	0.00 1	0.00 1	0.26 2	0.00 1	0.00 1	0.23 2

Wall Ht. (ft)	Spacing (in) o.c.	362S137-mils (Fy)								362S162-mils (Fy)								362S200-mils (Fy)								362S250-mils (Fy)			362S300-mils (Fy)		
		-33 (33)	-43 (33)	-54 (33)	-54 (50)	-68 (33)	-68 (50)	-97 (33)	-97 (50)	-33 (33)	-43 (33)	-54 (33)	-54 (50)	-68 (33)	-68 (50)	-97 (33)	-97 (50)	-33 (33)	-43 (33)	-54 (33)	-54 (50)	-68 (33)	-68 (50)	-97 (33)	-97 (50)	-54 (50)	-68 (50)	-97 (50)	-54 (50)	-68 (50)	-97 (50)
8	12	0.24 6	0.81 7	1.43	2.11	2.17	3.10	3.87	4.99	0.50 7	1.21	1.97	2.82	2.86	4.01	4.99	6.57	0.74 7	1.71	2.69	3.65	3.98	5.18	6.24	8.17	4.19	6.08	9.59	4.31	6.50	10.55
	16	0.00 6	0.38 6	0.95 7	1.71 7	1.66	2.67	3.40	4.59	0.06 6	0.75 6	1.46 7	2.37 7	2.31	3.54	4.47	6.11	0.25 6	1.20 7	2.15	3.14	3.46	4.67	5.69	7.68	3.64	5.50	9.07	3.77	5.92	9.97
	24	0.00 3	0.00 3	0.08 6	0.97 6	0.72 6	1.88 6	2.53 7	3.85 7	0.00 3	0.00 6	0.52 6	1.56 6	1.31 6	2.68 6	3.50	5.25	0.00 3	0.26 6	1.15 6	2.19 6	2.49 7	3.72 7	4.66	6.76	2.62 7	4.43	8.09	2.77	4.83	8.88
9	12	0.00 6	0.44 6	0.98 6	1.66 6	1.65 7	2.55 7	3.41	4.56	0.13 6	0.78 6	1.45 7	2.27 7	2.26	3.34	4.29	5.71	0.32 6	1.21 7	2.11	2.97	3.34	4.37	5.44	7.14	3.49	5.15	8.44	3.63	5.62	9.45
	16	0.00 3	0.00 3	0.45 6	1.21 6	1.07 6	2.07 6	2.84 7	4.07 7	0.00 3	0.26 6	0.88 6	1.77 6	1.65 7	2.82 7	3.68	5.17	0.00 6	0.64 6	1.49 6	2.40 6	2.73	3.79	4.79	6.57	2.86 7	4.49	7.83	3.01	4.94	8.76
	24	0.00 2	0.00 2	0.00 3	0.39 3	0.04 3	1.19 3	1.81 6	3.17 6	0.00 2	0.00 3	0.00 3	0.87 3	0.54 6	1.86 6	2.58 6	4.19 6	0.00 3	0.00 3	0.38 6	1.36 6	1.64 6	2.73 6	3.60 7	5.51 7	1.72 6	3.30 6	6.70	1.87 6	3.70 7	7.47
10	12	0.00 3	0.09 3	0.56 6	1.22 6	1.15 6	2.01 6	2.83 7	3.91 7	0.00 3	0.38 6	0.96 6	1.74 6	1.69 7	2.69 7	3.58	4.82	0.00 6	0.74 6	1.54 6	2.32 6	2.69 7	3.58 7	4.62	6.10	2.81 7	4.24	7.28	2.96	4.70	8.21
	16	0.00 2	0.00 3	0.00 3	0.74 3	0.52 6	1.49 6	2.19 6	3.36 6	0.00 2	0.00 3	0.35 6	1.21 6	1.02 6	2.12 6	2.90 7	4.24 7	0.00 3	0.13 3	0.87 6	1.71 6	2.03 6	2.95 6	3.90	5.47	2.12 6	3.54 7	6.60	2.27 6	3.96 7	7.43
	24	0.00 2	0.00 2	0.00 2	0.00 2	0.00 3	0.57 3	1.07 3	2.38 3	0.00 2	0.00 2	0.00 3	0.27 3	0.00 3	1.12 3	1.70 6	3.19 6	0.00 2	0.00 2	0.00 3	0.64 3	0.86 3	1.85 3	2.60 6	4.34 6	0.91 3	2.27 6	5.38 6	1.04 6	2.63 6	6.02 7
12	12	0.00 2	0.00 2	0.00 3	0.48 3	0.28 3	1.06 3	1.66 6	2.52 6	0.00 2	0.00 2	0.13 3	0.84 3	0.68 3	1.55 3	2.24 6	3.20 6	0.00 2	0.00 3	0.56 3	1.21 3	1.53 6	2.19 6	3.06 6	4.17 6	1.53 6	2.64 6	5.10 7	1.74 6	3.06 6	5.76
	16	0.00 1	0.00 2	0.00 2	0.00 2	0.00 2	0.54 2	0.99 3	1.96 3	0.00 2	0.00 2	0.00 2	0.30 2	0.00 3	0.97 3	1.52 3	2.60 3	0.00 2	0.00 2	0.00 3	0.60 3	0.82 3	1.55 3	2.28 6	3.51 6	0.83 3	1.91 6	4.38 6	0.99 3	2.27 6	4.93 6
	24	0.00 1	0.00 1	0.00 2	0.00 2	0.00 2	0.00 2	0.00 2	0.99 2	0.00 1	0.00 1	0.00 2	0.00 2	0.00 2	0.00 2	0.26 2	1.55 2	0.00 1	0.00 2	0.00 2	0.00 2	0.00 2	0.45 2	0.90 3	2.36 3	0.00 2	0.65 3	3.11 3	0.00 2	0.88 3	3.47 6
14	12	0.00 1	0.00 2	0.00 2	0.00 2	0.00 2	0.39 2	0.75 3	1.49 3	0.00 1	0.00 2	0.00 2	0.21 2	0.00 2	0.73 2	1.19 3	2.00 3	0.00 2	0.00 2	0.00 2	0.43 2	0.62 3	1.18 3	1.80 3	2.71 3	0.61 3	1.46 3	3.40 6	0.76 3	1.77 3	3.85 6
	16	0.00 1	0.00 1	0.00 1	0.00 1	0.00 2	0.00 2	0.10 2	0.96 2	0.00 1	0.00 1	0.00 2	0.00 2	0.00 2	0.19 2	0.48 2	1.43 2	0.00 1	0.00 2	0.00 2	0.00 2	0.00 2	0.58 2	1.03 3	2.08 3	0.00 2	0.77 2	2.71 3	0.03 2	1.00 3	3.04 3
	24	0.00 1	0.00 1	0.00 1	0.00 1	0.00 1	0.00 1	0.00 2	0.06 2	0.00 1	0.00 1	0.00 1	0.00 1	0.00 1	0.00 1	0.00 2	0.44 2	0.00 1	0.00 1	0.00 1	0.00 1	0.00 2	0.00 2	0.00 2	1.00 2	0.00 2	0.00 2	1.50 2	0.00 2	0.00 2	1.64 2
16	12	0.00 1	0.00 1	0.00 1	0.00 1	0.00 2	0.00 2	0.12 2	0.80 2	0.00 1	0.00 1	0.00 2	0.00 2	0.00 2	0.19 2	0.43 2	1.17 2	0.00 1	0.00 1	0.00 2	0.00 2	0.00 2	0.50 2	0.87 2	1.70 2	0.00 2	0.66 2	2.21 3	0.07 2	0.85 2	2.49 3
	16	0.00 1	0.00 1	0.00 1	0.00 1	0.00 1	0.00 1	0.00 2	0.31 2	0.00 1	0.00 1	0.00 1	0.00 1	0.00 1	0.00 1	0.00 2	0.64 2	0.00 1	0.00 1	0.00 1	0.00 1	0.00 2	0.00 2	0.14 2	1.12 2	0.00 2	0.02 2	1.55 2	0.00 2	0.13 2	1.73 2
	24	0.00 1	0.00 1	0.00 1	0.00 1	0.00 1	0.00 1	0.00 1	0.00 1	0.00 1	0.00 1	0.00 1	0.00 1	0.00 1	0.00 1	0.00 1	0.00 1	0.00 1	0.00 1	0.00 1	0.00 1	0.00 1	0.00 1	0.00 1	0.11 1	0.00 1	0.00 1	0.43 2	0.00 1	0.00 1	0.42 2

Wall Ht. (ft)	Spacing (in) o.c.	400S137-mils (Fy)								400S162-mils (Fy)								400S200-mils (Fy)								400S250-mils (Fy)			400S300-mils (Fy)		
		-33 (33)	-43 (33)	-54 (33)	-54 (50)	-68 (33)	-68 (50)	-97 (33)	-97 (50)	-33 (33)	-43 (33)	-54 (33)	-54 (50)	-68 (33)	-68 (50)	-97 (33)	-97 (50)	-33 (33)	-43 (33)	-54 (33)	-54 (50)	-68 (33)	-68 (50)	-97 (33)	-97 (50)	-54 (50)	-68 (50)	-97 (50)	-54 (50)	-68 (50)	-97 (50)
8	12	0.40 7	1.04	1.75	2.50	2.67	3.72	4.36	5.49	0.70	1.50	2.35	3.32	3.48	4.81	5.88	7.82	0.97	2.06	3.15	4.28	4.52	6.14	7.27	9.68	4.74	7.04	11.33	4.92	7.43	12.26
	16	0.00 6	0.62 7	1.28	2.10	2.16	3.28	3.93	5.13	0.26 6	1.03	1.85	2.87	2.93	4.33	5.37	7.36	0.49 7	1.55	2.62	3.76	3.94	5.62	6.73	9.19	4.21	6.47	10.81	4.39	6.86	11.69
	24	0.00 3	0.00 6	0.41 6	1.35 6	1.20 7	2.47 7	3.11	4.45	0.00 6	0.18 6	0.91 7	2.04 7	1.90	3.44	4.40	6.48	0.00 6	0.61 6	1.62 7	2.80 7	2.86	4.64	5.71	8.25	3.21	5.39	9.81	3.40	5.78	10.59
9	12	0.07 6	0.67 6	1.31	2.06	2.16	3.21	3.94	5.12	0.33 6	1.07 7	1.85	2.78	2.88	4.16	5.20	6.98	0.55 7	1.56	2.58	3.61	3.84	5.35	6.50	8.67	4.12	6.24	10.20	4.27	6.65	11.14
	16	0.00 3	0.18 6	0.76 6	1.59 6	1.56 7	2.70 7	3.41	4.67	0.00 6	0.53 6	1.27 7	2.26 7	2.24	3.60	4.59	6.42	0.00 6	0.98 7	1.96	3.01	3.16	4.74	5.85	8.08	3.48	5.55	9.57	3.64	5.96	10.45
	24	0.00 2	0.00 3	0.00 6	0.74 6	0.46 6	1.75 6	2.42 7	3.82 7	0.00 3	0.00 3	0.20 6	1.32 6	1.07 6	2.57 6	3.45 7	5.39 7	0.00 3	0.00 6	0.82 6	1.93 6	1.92 7	3.62 7	4.64	6.98	2.32 6	4.29 7	8.39	2.49 7	4.68	9.13
10	12	0.00 3	0.30 6	0.87 6	1.61 6	1.63 7	2.65 7	3.47	4.68	0.00 6	0.64 6	1.35 7	2.24 7	2.27	3.48	4.48	6.08	0.15 6	1.07 6	2.01	2.94	3.14	4.54	5.68	7.61	3.44	5.35	9.01	3.60	5.82	9.97
	16	0.00 3	0.00 3	0.27 6	1.09 6	0.96 6	2.07 6	2.84 7	4.14 7	0.00 3	0.06 6	0.70 6	1.67 6	1.56 6	2.86 6	3.79	5.45	0.00 3	0.43 6	1.32 6	2.29 6	2.39 7	3.86 7	4.93	6.94	2.73 7	4.58	8.29	2.89 7	5.03	9.16
	24	0.00 2	0.00 2	0.00 3	0.18 3	0.00 3	1.05 3	1.70 6	3.15 6	0.00 2	0.00 3	0.00 3	0.66 3	0.29 6	1.75 6	2.52 6	4.32 6	0.00 2	0.00 3	0.09 6	1.13 6	1.03 6	2.64 6	3.58 7	5.71 7	1.46 6	3.19 6	6.97 7	1.61 6	3.59 6	7.67
12	12	0.00 2	0.00 3	0.08 3	0.79 3	0.65 6	1.58 6	2.35 6	3.45 6	0.00 2	0.00 3	0.43 3	1.25 3	1.15 6	2.20 6	3.06 6	4.32 6	0.00 3	0.20 3	0.95 6	1.73 6	1.84 6	3.00 6	4.04 7	5.52 7	2.14 6	3.59 7	6.66	2.30 6	4.04 7	7.51
	16	0.00 2	0.00 2	0.00 2	0.23 2	0.00 3	0.96 3	1.61 6	2.81 6	0.00 2	0.00 2	0.00 3	0.64 3	0.37 3	1.53 3	2.26 6	3.63 6	0.00 2	0.00 3	0.19 3	1.03 3	1.00 6	2.27 6	3.18 6	4.78 6	1.35 6	2.75 6	5.84 7	1.50 6	3.15 6	6.57 7
	24	0.00 1	0.00 2	0.00 2	0.00 2	0.00 2	0.00 2	0.33 3	1.69 3	0.00 1	0.00 2	0.00 2	0.00 2	0.00 2	0.38 2	0.88 3	2.42 3	0.00 2	0.00 2	0.00 2	0.00 2	0.00 3	1.00 3	1.67 3	3.46 3	0.00 3	1.30 3	4.40 6	0.10 3	1.59 3	4.90 6
14	12	0.00 2	0.00 2	0.00 2	0.16 2	0.00 2	0.73 2	1.29 3	2.19 3	0.00 2	0.00 2	0.00 2	0.48 2	0.26 3	1.18 3	1.83 6	2.84 6	0.00 2	0.00 2	0.11 3	0.79 3	0.78 3	1.76 3	2.60 6	3.75 6	1.04 3	2.15 6	4.63 6	1.22 3	2.54 6	5.22 6
	16	0.00 1	0.00 1	0.00 2	0.00 2	0.00 2	0.14 2	0.55 2	1.57 2	0.00 1	0.00 2	0.00 2	0.00 2	0.00 2	0.55 2	1.03 3	2.17 3	0.00 2	0.00 2	0.00 2	0.12 2	0.00 3	1.06 3	1.72 3	3.02 3	0.28 2	1.33 3	3.82 6	0.40 3	1.64 3	4.28 6
	24	0.00 1	0.00 1	0.00 1	0.00 1	0.00 1	0.00 1	0.00 2	0.51 2	0.00 1	0.00 1	0.00 1	0.00 1	0.00 2	0.00 2	0.00 2	1.02 2	0.00 1	0.00 1	0.00 2	0.00 2	0.00 2	0.00 2	0.21 2	1.75 2	0.00 2	0.00 2	2.41 3	0.00 2	0.10 2	2.65 3
16	12	0.00 1	0.00 1	0.00 2	0.00 2	0.00 2	0.15 2	0.49 2	1.29 2	0.00 1	0.00 2	0.00 2	0.00 2	0.00 2	0.48 2	0.90 3	1.77 3	0.00 1	0.00 2	0.00 2	0.14 2	0.01 2	0.89 2	1.48 3	2.46 3	0.27 2	1.12 3	3.11 3	0.38 2	1.39 3	3.50 6
	16	0.00 1	0.00 1	0.00 1	0.00 1	0.00 2	0.00 2	0.00 2	0.72 2	0.00 1	0.00 1	0.00 1	0.00 1	0.00 2	0.00 2	0.13 2	1.15 2	0.00 1	0.00 1	0.00 2	0.00 2	0.00 2	0.24 2	0.63 2	1.77 2	0.00 2	0.37 2	2.35 3	0.00 2	0.54 2	2.61 3
	24	0.00 1	0.00 1	0.00 1	0.00 1	0.00 1	0.00 1	0.00 1	0.00 1	0.00 1	0.00 1	0.00 1	0.00 1	0.00 1	0.00 1	0.00 2	0.09 2	0.00 1	0.00 1	0.00 1	0.00 1	0.00 1	0.00 1	0.00 2	0.60 2	0.00 1	0.00 2	1.03 2	0.00 1	0.00 2	1.08 2

Wall Ht. (ft)	Spacing (in) o.c.	550S137-mils (Fy)								550S162-mils (Fy)								550S200-mils (Fy)								550S250-mils (Fy)			550S300-mils (Fy)		
		-33 (33)	-43 (33)	-54 (33)	-54 (50)	-68 (33)	-68 (50)	-97 (33)	-97 (50)	-33 (33)	-43 (33)	-54 (33)	-54 (50)	-68 (33)	-68 (50)	-97 (33)	-97 (50)	-33 (33)	-43 (33)	-54 (33)	-54 (50)	-68 (33)	-68 (50)	-97 (33)	-97 (50)	-54 (50)	-68 (50)	-97 (50)	-54 (50)	-68 (50)	-97 (50)
8	12	0.89	1.71	2.59	3.17	3.72	4.43	5.96	6.89	1.35	2.41	3.56	4.70	5.06	6.55	8.19	10.41	1.73	3.06	4.52	6.06	6.41	8.55	10.46	13.95	6.31	9.47	16.28	6.60	9.68	17.35
	16	0.57	1.42	2.30	2.91	3.42	4.18	5.64	6.64	0.98	2.06	3.21	4.36	4.70	6.21	7.80	10.08	1.34	2.64	4.13	5.64	6.02	8.15	10.02	13.55	5.91	9.03	15.84	6.20	9.25	16.87
	24	0.00 7	0.84	1.72	2.40	2.84	3.69	5.02	6.16	0.26	1.37	2.53	3.69	4.00	5.56	7.03	9.42	0.59	1.84	3.37	4.83	5.25	7.38	9.16	12.76	5.11	8.16	14.97	5.41	8.41	15.92
9	12	0.62	1.46	2.33	2.94	3.46	4.21	5.67	6.66	1.03	2.09	3.24	4.36	4.74	6.23	7.83	10.08	1.38	2.67	4.12	5.57	5.98	8.02	9.92	13.29	5.85	8.89	15.50	6.14	9.13	16.52
	16	0.23	1.09	1.97	2.61	3.08	3.89	5.26	6.35	0.57	1.65	2.80	3.93	4.28	5.80	7.32	9.65	0.91	2.16	3.64	5.05	5.49	7.53	9.36	12.78	5.34	8.34	14.94	5.64	8.59	15.91
	24	0.00 6	0.39 7	1.26	1.98	2.36	3.27	4.48	5.74	0.00 6	0.82	1.96	3.11	3.41	4.98	6.35	8.80	0.02 7	1.19	2.70	4.06	4.53	6.57	8.28	11.79	4.37	7.26	13.84	4.66	7.55	14.71
10	12	0.34	1.18	2.05	2.68	3.16	3.95	5.34	6.40	0.69	1.74	2.86	3.94	4.36	5.85	7.40	9.69	1.02	2.24	3.68	5.03	5.49	7.42	9.30	12.53	5.33	8.24	14.59	5.62	8.53	15.57
	16	0.00 6	0.74 7	1.61	2.28	2.70	3.55	4.84	6.01	0.16 7	1.22	2.34	3.43	3.81	5.33	6.78	9.14	0.47 7	1.64	3.10	4.41	4.90	6.82	8.62	11.90	4.73	7.57	13.90	5.02	7.87	14.82
	24	0.00 6	0.00 6	0.77 6	1.52 6	1.83 7	2.80 7	3.88	5.25	0.00 6	0.26 6	1.34 7	2.46 7	2.76	4.32	5.59	8.09	0.00 6	0.52 7	2.00	3.25	3.76	5.68	7.31	10.69	3.57	6.29	12.57	3.85	6.62	13.37
12	12	0.00 6	0.58 6	1.41 7	2.08 7	2.47	3.33	4.55	5.74	0.00 6	0.99 7	2.03	3.01	3.41	4.76	6.36	8.67	0.28 6	1.34 7	2.71	3.83	4.39	6.05	7.84	10.70	4.19	6.77	12.48	4.48	7.16	13.39
	16	0.00 3	0.02 6	0.83 6	1.54 6	1.86 7	2.78 7	3.85	5.18	0.00 3	0.34 6	1.35 6	2.35 6	2.68 7	4.07 7	5.49	7.88	0.00 6	0.59 6	1.96 7	3.05 7	3.60	5.27	6.92	9.84	3.40	5.88	11.54	3.68	6.28	12.37
	24	0.00 2	0.00 3	0.00 3	0.56 3	0.72 6	1.78 6	2.56 6	4.13 6	0.00 2	0.00 3	0.12 6	1.16 6	1.34 6	2.80 6	3.90 7	6.43 7	0.00 3	0.00 3	0.59 6	1.64 6	2.16 6	3.84 6	5.23	8.27	1.96 6	4.26 7	9.80	2.21 6	4.65 7	10.46
14	12	0.00 3	0.00 3	0.74 6	1.42 6	1.72 6	2.61 6	3.63 7	4.93 7	0.00 3	0.26 6	1.18 6	2.05 6	2.39 6	3.59 6	4.94	6.96	0.00 3	0.48 6	1.72 6	2.63 6	3.22 7	4.61 7	6.23	8.66	3.05 7	5.23	10.16	3.28 7	5.67	11.02
	16	0.00 2	0.00 3	0.04 3	0.78 3	0.96 6	1.94 6	2.76 6	4.21 6	0.00 2	0.00 3	0.41 3	1.31 3	1.54 6	2.79 6	3.91 6	6.03 6	0.00 3	0.00 3	0.86 6	1.76 6	2.30 6	3.72 6	5.13 7	7.66 7	2.12 6	4.20 6	9.05	2.34 6	4.62 7	9.78
	24	0.00 2	0.00 2	0.00 2	0.00 2	0.00 3	0.74 3	1.21 3	2.91 3	0.00 2	0.00 2	0.00 2	0.00 2	0.04 3	1.38 3	2.09 6	4.39 6	0.00 2	0.00 2	0.00 3	0.24 3	0.67 3	2.13 3	3.18 6	5.87 6	0.49 3	2.37 6	7.07 6	0.68 3	2.74 6	7.58 7
16	12	0.00 2	0.00 2	0.08 3	0.75 3	0.95 3	1.85 3	2.66 6	4.03 6	0.00 2	0.00 3	0.42 3	1.19 3	1.44 6	2.48 6	3.56 6	5.29 6	0.00 2	0.00 3	0.83 6	1.58 6	2.12 6	3.28 6	4.65 7	6.69 7	1.96 6	3.76 6	7.92	2.15 6	4.22 6	8.73
	16	0.00 2	0.00 2	0.00 2	0.05 2	0.12 3	1.09 3	1.66 3	3.18 3	0.00 2	0.00 2	0.00 2	0.42 2	0.53 3	1.64 3	2.45 6	4.31 6	0.00 2	0.00 2	0.00 3	0.69 3	1.13 3	2.34 3	3.46 6	5.63 6	0.97 3	2.67 6	6.73 6	1.15 3	3.07 6	7.38 7
	24	0.00 1	0.00 1	0.00 2	0.00 2	0.00 2	0.00 2	0.00 2	1.71 2	0.00 1	0.00 2	0.00 2	0.00 2	0.00 2	0.20 2	0.54 3	2.62 3	0.00 1	0.00 2	0.00 2	0.00 2	0.00 2	0.73 2	1.40 3	3.79 3	0.00 2	0.77 3	4.67 6	0.00 2	1.07 3	5.04 6

Wall Ht. (ft)	Spacing (in) o.c.	600S137-mils (Fy)								600S162-mils (Fy)								600S200-mils (Fy)								600S250-mils (Fy)			600S300-mils (Fy)		
		-33 (33)	-43 (33)	-54 (33)	-54 (50)	-68 (33)	-68 (50)	-97 (33)	-97 (50)	-33 (33)	-43 (33)	-54 (33)	-54 (50)	-68 (33)	-68 (50)	-97 (33)	-97 (50)	-33 (33)	-43 (33)	-54 (33)	-54 (50)	-68 (33)	-68 (50)	-97 (33)	-97 (50)	-54 (50)	-68 (50)	-97 (50)	-54 (50)	-68 (50)	-97 (50)
8	12	0.97	1.73	2.59	3.15	3.83	4.40	6.16	6.99	1.47	2.53	3.68	4.79	5.22	6.65	8.47	10.61	1.88	3.27	4.77	6.42	6.73	9.00	11.01	14.67	6.63	9.96	17.19	6.93	10.14	18.32
	16	0.68	1.44	2.30	2.90	3.57	4.16	5.88	6.78	1.12	2.20	3.36	4.48	4.91	6.35	8.12	10.32	1.52	2.88	4.41	6.03	6.37	8.63	10.61	14.30	6.26	9.55	16.78	6.56	9.75	17.87
	24	0.11	0.88	1.74	2.41	3.06	3.68	5.33	6.36	0.45	1.58	2.74	3.89	4.28	5.77	7.43	9.74	0.81	2.13	3.70	5.27	5.66	7.92	9.83	13.58	5.52	8.75	15.97	5.82	8.97	16.99
9	12	0.73	1.48	2.34	2.93	3.61	4.18	5.91	6.80	1.18	2.25	3.40	4.51	4.94	6.38	8.15	10.34	1.56	2.91	4.41	5.98	6.35	8.54	10.55	14.12	6.22	9.45	16.51	6.52	9.65	17.59
	16	0.37	1.13	1.98	2.62	3.28	3.88	5.55	6.53	0.75	1.85	3.00	4.13	4.54	6.00	7.71	9.96	1.12	2.43	3.96	5.49	5.89	8.08	10.04	13.65	5.75	8.93	15.99	6.04	9.15	17.02
	24	0.00 6	0.43	1.28	2.01	2.64	3.27	4.86	6.00	0.00 7	1.07	2.23	3.38	3.76	5.25	6.84	9.22	0.27	1.51	3.08	4.55	5.01	7.18	9.05	12.73	4.83	7.93	14.96	5.12	8.18	15.90
10	12	0.47	1.22	2.07	2.69	3.35	3.94	5.63	6.58	0.86	1.94	3.09	4.20	4.62	6.06	7.79	10.01	1.22	2.51	4.01	5.49	5.92	8.01	10.01	13.47	5.75	8.86	15.72	6.05	9.10	16.74
	16	0.04 7	0.78	1.63	2.31	2.95	3.56	5.18	6.24	0.36	1.46	2.60	3.73	4.13	5.59	7.23	9.53	0.69	1.94	3.46	4.90	5.36	7.45	9.39	12.89	5.18	8.23	15.07	5.47	8.49	16.04
	24	0.00 6	0.00 6	0.79 7	1.57 7	2.17	2.82	4.33	5.58	0.00 6	0.54 7	1.67	2.82	3.18	4.68	6.16	8.61	0.00 6	0.86	2.42	3.78	4.29	6.37	8.18	11.76	4.08	7.02	13.82	4.36	7.30	14.67
12	12	0.00 6	0.63 7	1.45	2.13	2.75	3.36	4.94	6.03	0.19 6	1.24	2.36	3.43	3.87	5.30	6.90	9.18	0.50 7	1.66	3.11	4.37	4.91	6.77	8.72	11.86	4.69	7.51	13.82	4.98	7.83	14.75
	16	0.00 6	0.06 6	0.85 7	1.60 7	2.19	2.82	4.31	5.54	0.00 6	0.61 6	1.70 7	2.78 7	3.18	4.63	6.11	8.48	0.00 6	0.92 7	2.38	3.60	4.16	6.01	7.85	11.05	3.93	6.65	12.92	4.21	6.99	13.77
	24	0.00 3	0.00 3	0.00 6	0.63 6	1.14 6	1.82 6	3.13 7	4.60 7	0.00 3	0.00 6	0.49 6	1.59 6	1.90 6	3.39 6	4.63	7.17	0.00 3	0.00 6	1.03 6	2.19 6	2.75 7	4.60 7	6.22	9.52	2.50 7	5.06	11.23	2.76 7	5.42	11.92
14	12	0.00 3	0.01 6	0.77 6	1.50 6	2.07 7	2.68 7	4.12	5.35	0.00 6	0.52 6	1.53 6	2.49 6	2.92	4.21	5.81	8.09	0.00 6	0.79 6	2.14 7	3.19 7	3.79	5.39	7.22	9.97	3.56	6.02	11.64	3.82	6.43	12.50
	16	0.00 2	0.00 3	0.05 6	0.84 6	1.36 6	2.00 6	3.31 7	4.70 7	0.00 3	0.00 3	0.75 6	1.74 6	2.09 6	3.41 6	4.80	7.17	0.00 3	0.00 6	1.28 6	2.30 6	2.88 7	4.48 7	6.14	8.96	2.64 6	4.99	10.53	2.89 7	5.39	11.28
	24	0.00 2	0.00 2	0.00 3	0.00 3	0.08 3	0.77 3	1.83 6	3.49 6	0.00 2	0.00 2	0.00 3	0.38 3	0.58 6	1.95 6	2.97 6	5.51 6	0.00 2	0.00 3	0.00 3	0.71 3	1.23 6	2.85 6	4.19 6	7.15 6	0.99 6	3.13 6	8.51 7	1.19 6	3.50 6	9.05
16	12	0.00 2	0.00 3	0.10 3	0.85 3	1.35 6	1.95 6	3.23 6	4.56 6	0.00 3	0.00 3	0.74 6	1.60 6	1.96 6	3.09 6	4.44 7	6.44 7	0.00 3	0.01 6	1.22 6	2.09 6	2.68 6	4.03 6	5.66	8.00	2.47 6	4.57 7	9.40	2.69 6	4.99 7	10.20
	16	0.00 2	0.00 2	0.00 3	0.10 3	0.53 3	1.16 3	2.26 6	3.76 6	0.00 2	0.00 2	0.00 3	0.78 3	1.03 6	2.21 6	3.30 6	5.42 6	0.00 2	0.00 3	0.28 3	1.14 3	1.67 6	3.04 6	4.44 6	6.89 6	1.46 6	3.43 6	8.17 7	1.65 6	3.82 6	8.82
	24	0.00 1	0.00 2	0.00 2	0.00 2	0.00 2	0.00 2	0.57 3	2.34 3	0.00 2	0.00 2	0.00 2	0.00 2	0.00 3	0.67 3	1.31 3	3.64 3	0.00 2	0.00 2	0.00 2	0.00 2	0.00 3	1.32 3	2.31 6	4.94 6	0.00 3	1.43 3	5.99 6	0.00 3	1.74 3	6.38 6

Wall Ht. (ft)	Spacing (in) o.c.	800S137-mils (Fy)								800S162-mils (Fy)								800S200-mils (Fy)								800S250-mils (Fy)			800S300-mils (Fy)		
		-33 (33)	-43 (33)	-54 (33)	-54 (50)	-68 (33)	-68 (50)	-97 (33)	-97 (50)	-33 (33)	-43 (33)	-54 (33)	-54 (50)	-68 (33)	-68 (50)	-97 (33)	-97 (50)	-33 (33)	-43 (33)	-54 (33)	-54 (50)	-68 (33)	-68 (50)	-97 (33)	-97 (50)	-54 (50)	-68 (50)	-97 (50)	-54 (50)	-68 (50)	-97 (50)
8	12	1.14	1.88	2.74	3.12	3.89	4.32	6.45	6.81	1.71	2.70	3.85	4.84	5.41	6.67	8.98	10.69	2.23	3.71	5.24	6.99	7.27	9.60	11.82	15.33	7.42	11.00	18.99	7.75	11.28	20.67
	16	0.92	1.67	2.53	2.95	3.69	4.16	6.28	6.66	1.46	2.45	3.61	4.62	5.17	6.45	8.76	10.48	1.96	3.42	4.98	6.71	7.01	9.34	11.56	15.08	7.13	10.70	18.69	7.46	10.98	20.33
	24	0.50	1.26	2.13	2.62	3.30	3.84	5.93	6.36	0.95	1.97	3.13	4.17	4.69	6.02	8.32	10.05	1.41	2.85	4.45	6.15	6.50	8.83	11.04	14.59	6.57	10.10	18.11	6.89	10.39	19.67
9	12	0.96	1.71	2.57	2.98	3.72	4.18	6.30	6.68	1.50	2.50	3.65	4.65	5.21	6.48	8.79	10.51	2.01	3.47	5.02	6.75	7.05	9.38	11.59	15.11	7.14	10.70	18.65	7.47	10.96	20.22
	16	0.69	1.45	2.31	2.77	3.47	3.98	6.08	6.49	1.18	2.19	3.34	4.37	4.90	6.2	8.51	10.23	1.66	3.11	4.68	6.39	6.72	9.05	11.26	14.79	6.78	10.32	18.27	7.10	10.58	19.80
	24	0.16	0.94	1.81	2.35	2.97	3.57	5.64	6.11	0.55	1.57	2.73	3.80	4.30	5.65	7.94	9.69	0.98	2.39	4.02	5.67	6.07	8.39	10.59	14.16	6.07	9.55	17.51	6.38	9.83	18.95
10	12	0.77	1.52	2.38	2.83	3.54	4.03	6.14	6.54	1.27	2.27	3.42	4.43	4.98	6.27	8.57	10.29	1.75	3.20	4.77	6.47	6.80	9.12	11.33	14.85	6.83	10.35	18.24	7.14	10.60	19.70
	16	0.44	1.20	2.07	2.56	3.23	3.78	5.86	6.30	0.88	1.89	3.04	4.08	4.60	5.92	8.22	9.95	1.33	2.75	4.35	6.02	6.39	8.70	10.91	14.45	6.38	9.87	17.77	6.69	10.13	19.17
	24	0.00	0.58	1.45	2.04	2.61	3.28	5.31	5.82	0.11	1.14	2.30	3.39	3.85	5.24	7.52	9.27	0.51	1.88	3.54	5.14	5.59	7.89	10.08	13.66	5.51	8.93	16.83	5.81	9.20	18.12
12	12	0.33	1.09	1.95	2.46	3.10	3.67	5.74	6.19	0.74	1.74	2.89	3.93	4.44	5.76	8.05	9.77	1.17	2.57	4.17	5.81	6.21	8.49	10.70	14.22	6.08	9.50	17.23	6.38	9.71	18.41
	16	0.00	0.64	1.50	2.08	2.65	3.30	5.33	5.84	0.20	1.21	2.35	3.42	3.89	5.26	7.53	9.27	0.59	1.94	3.58	5.16	5.62	7.89	10.09	13.63	5.45	8.82	16.53	5.74	9.04	17.63
	24	0.00 6	0.00 7	0.64	1.35	1.78	2.59	4.54	5.14	0.00 6	0.18	1.32	2.44	2.84	4.29	6.52	8.28	0.00 7	0.74	2.43	3.92	4.47	6.72	8.89	12.46	4.23	7.48	15.17	4.51	7.74	16.13
14	12	0.00 7	0.59	1.44	2.02	2.58	3.24	5.25	5.76	0.15 7	1.14	2.26	3.32	3.79	5.14	7.41	9.12	0.52	1.83	3.44	4.94	5.46	7.66	9.92	13.41	5.18	8.42	15.84	5.47	8.64	16.79
	16	0.00 6	0.01 7	0.86	1.52	1.99	2.74	4.70	5.27	0.00 6	0.45 7	1.56	2.65	3.06	4.47	6.70	8.42	0.00 7	1.03	2.66	4.10	4.67	6.85	9.08	12.58	4.36	7.51	14.89	4.64	7.76	15.76
	24	0.00 3	0.00 6	0.00 6	0.57 6	0.85 7	1.80 7	3.64	4.34	0.00 3	0.00 6	0.24 6	1.39 6	1.69	3.18	5.34	7.09	0.00 6	0.00 6	1.20 7	2.52 7	3.18	5.31	7.46	10.99	2.81	5.79	13.09	3.06	6.07	13.78
16	12	0.00 6	0.06 6	0.88 7	1.53 7	1.99	2.73	4.67	5.24	0.00 6	0.49 7	1.58	2.63	3.05	4.42	6.64	8.33	0.00 6	1.03	2.59	3.91	4.53	6.52	8.83	12.09	4.19	7.15	14.08	4.46	7.43	14.93
	16	0.00 3	0.00 6	0.17 6	0.91 6	1.25 7	2.11 7	3.97	4.62	0.00 3	0.00 6	0.72 6	1.81 6	2.15	3.57	5.73	7.43	0.00 6	0.09 6	1.66 7	2.91 7	3.56	5.53	7.76	11.04	3.20	6.05	12.90	3.46	6.34	13.64
	24	0.00 2	0.00 3	0.00 3	0.00 3	0.00 6	0.94 6	2.64 6	3.43 6	0.00 2	0.00 3	0.00 6	0.29 6	0.48 6	2 6	4.03 7	5.74 7	0.00 3	0.00 6	0.00 6	1.09 6	1.77 6	3.71 6	5.77	9.07	1.38 6	4.01 7	10.70	1.59 6	4.31 7	11.23

ALLOWABLE AXIAL LOAD TABLES

45 PSF LATERAL LOAD

Wall Ht. (ft)	Spacing (in) o.c.	350S137-mils (Fy) -33 (33)	-43 (33)	-54 (33)	-54 (50)	-68 (33)	-68 (50)	-97 (33)	-97 (50)	350S162-mils (Fy) -33 (33)	-43 (33)	-54 (33)	-54 (50)	-68 (33)	-68 (50)	-97 (33)	-97 (50)	350S200-mils (Fy) -33 (33)	-43 (33)	-54 (33)	-54 (50)	-68 (33)	-68 (50)	-97 (33)	-97 (50)	350S250-mils (Fy) -54 (50)	-68 (50)	-97 (50)	350S300-mils (Fy) -54 (50)	-68 (50)	-97 (50)
8	12	0.18	6	0.73	7	1.30	1.96	2.23	2.87	3.69	4.80	0.43	6	1.11	7	1.81	2.64	2.87	3.72	4.69	6.15	0.66	7	1.59	2.51	3.42	3.73	4.83	5.89	7.66	3.96	5.67	9.00	4.08	6.12	9.98
	16	0.00	6	0.30	6	0.83	6	1.56	6	1.79	7	2.45	7	3.22	4.40	0.00	6	0.65	6	1.30	7	2.20	7	2.39	3.26	4.17	5.69	0.17	6	1.08	7	1.97	2.91	3.21	4.32	5.34	7.17	3.41	5.10	8.48	3.54	5.54	9.41
	24	0.00	3	0.00	3	0.00	6	0.83	6	0.97	6	1.68	6	2.33	7	3.64	7	0.00	3	0.00	3	0.38	6	1.39	6	1.50	6	2.42	6	3.20	4.84	0.00	3	0.14	6	0.98	6	1.98	6	2.25	7	3.39	7	4.30	6.25	2.40	7	4.05	7.51	2.54	7	4.47	8.31
9	12	0.00	3	0.36	6	0.86	6	1.51	6	1.76	7	2.33	7	3.19	4.31	0.07	6	0.69	6	1.30	7	2.08	7	2.31	3.06	3.98	5.28	0.25	6	1.09	6	1.92	2.75	3.08	4.03	5.08	6.63	3.26	4.75	7.85	3.40	5.21	8.84
	16	0.00	3	0.00	3	0.34	6	1.06	6	1.25	6	1.86	6	2.63	7	3.82	7	0.00	3	0.17	6	0.74	6	1.60	6	1.77	6	2.55	6	3.38	4.75	0.00	3	0.52	6	1.32	6	2.18	6	2.49	7	3.46	7	4.44	6.06	2.64	7	4.12	7.25	2.78	7	4.55	8.16
	24	0.00	2	0.00	2	0.00	3	0.28	3	0.34	3	1.01	3	1.60	6	2.92	6	0.00	2	0.00	3	0.00	3	0.72	3	0.78	6	1.63	6	2.29	3.80	0.00	2	0.00	3	0.23	6	1.18	6	1.41	6	2.44	6	3.26	5.03	1.51	6	2.96	6.15	1.66	6	3.34	7	6.89
10	12	0.00	3	0.02	3	0.45	6	1.08	6	1.29	6	1.80	6	2.57	7	3.56	7	0.00	3	0.29	6	0.83	6	1.56	6	1.77	6	2.43	6	3.27	4.41	0.00	3	0.63	6	1.37	6	2.10	6	2.45	7	3.26	7	4.26	5.60	2.56	7	3.87	6.70	2.72	7	4.33	7.56
	16	0.00	2	0.00	2	0.00	3	0.61	3	0.74	3	1.30	3	1.95	6	3.03	6	0.00	2	0.00	3	0.23	3	1.05	3	1.18	6	1.89	6	2.62	3.84	0.00	3	0.03	3	0.72	6	1.51	6	1.80	6	2.65	6	3.55	4.99	1.89	6	3.19	6.05	2.05	6	3.61	7	6.81
	24	0.00	2	0.00	2	0.00	2	0.00	2	0.00	2	0.42	2	0.86	3	2.09	3	0.00	2	0.00	2	0.00	2	0.15	2	0.14	3	0.93	3	1.45	6	2.83	6	0.00	2	0.00	2	0.00	3	0.48	3	0.66	3	1.59	3	2.28	6	3.90	6	0.72	3	1.98	6	4.86	6	0.85	3	2.32	6	5.45	7
12	12	0.00	2	0.00	2	0.00	2	0.38	2	0.48	3	0.91	3	1.44	6	2.23	6	0.00	2	0.00	2	0.00	2	0.70	3	0.82	3	1.35	3	1.99	6	2.86	6	0.00	2	0.00	3	0.43	3	1.04	3	1.33	6	1.94	6	2.75	6	3.75	6	1.33	6	2.35	6	4.61	7	1.54	6	2.76	6	5.21	7
	16	0.00	1	0.00	2	0.00	2	0.00	2	0.00	2	0.41	2	0.80	3	1.70	3	0.00	2	0.00	2	0.00	2	0.20	2	0.21	3	0.81	3	1.29	3	2.29	3	0.00	2	0.00	2	0.00	2	0.46	2	0.65	3	1.33	3	1.99	6	3.13	6	0.67	3	1.65	3	3.92	6	0.82	3	2.00	6	4.42	6
	24	0.00	1	0.00	1	0.00	1	0.00	1	0.00	2	0.00	2	0.00	2	0.78	2	0.00	1	0.00	1	0.00	2	0.00	2	0.00	2	0.00	2	0.08	2	1.29	2	0.00	1	0.00	2	0.00	2	0.00	2	0.00	2	0.30	2	0.67	3	2.03	3	0.00	2	0.46	2	2.71	3	0.00	2	0.67	3	3.02	3
14	12	0.00	1	0.00	1	0.00	1	0.00	2	0.00	2	0.29	2	0.60	2	1.29	2	0.00	1	0.00	2	0.00	2	0.13	2	0.13	2	0.60	2	0.99	3	1.75	3	0.00	2	0.00	2	0.00	2	0.33	2	0.48	2	1.01	2	1.56	3	2.41	3	0.49	2	1.26	3	3.04	6	0.62	3	1.54	3	3.45	6
	16	0.00	1	0.00	1	0.00	1	0.00	1	0.00	2	0.00	2	0.00	2	0.79	2	0.00	1	0.00	1	0.00	2	0.00	2	0.00	2	0.09	2	0.32	2	1.21	2	0.00	1	0.00	1	0.00	2	0.00	2	0.00	2	0.45	2	0.82	3	1.81	3	0.00	2	0.61	2	2.38	3	0.00	2	0.81	2	2.68	3
	24	0.00	1	0.00	1	0.00	1	0.00	1	0.00	1	0.00	1	0.00	1	0.00	1	0.00	1	0.00	1	0.00	1	0.00	1	0.00	1	0.00	1	0.00	2	0.28	2	0.00	1	0.00	1	0.00	1	0.00	1	0.00	1	0.00	1	0.00	2	0.79	2	0.00	1	0.00	2	1.24	2	0.00	2	0.00	2	1.35	2
16	12	0.00	1	0.00	1	0.00	1	0.00	1	0.00	1	0.00	1	0.02	2	0.66	2	0.00	1	0.00	1	0.00	1	0.00	1	0.00	2	0.11	2	0.30	2	0.99	2	0.00	1	0.00	1	0.00	2	0.00	2	0.00	2	0.39	2	0.70	2	1.48	2	0.00	2	0.53	2	1.95	3	0.00	2	0.69	2	2.20	3
	16	0.00	1	0.00	1	0.00	1	0.00	1	0.00	1	0.00	1	0.00	1	0.20	1	0.00	1	0.00	1	0.00	1	0.00	1	0.00	1	0.00	1	0.00	2	0.49	2	0.00	1	0.00	1	0.00	1	0.00	1	0.00	2	0.00	2	0.01	2	0.93	2	0.00	1	0.00	2	1.32	2	0.00	2	0.01	2	1.47	2
	24	0.00	1	0.00	1	0.00	1	0.00	1	0.00	1	0.00	1	0.00	1	0.00	1	0.00	1	0.00	1	0.00	1	0.00	1	0.00	1	0.00	1	0.00	1	0.00	1	0.00	1	0.00	1	0.00	1	0.00	1	0.00	1	0.00	1	0.00	1	0.00	1	0.00	1	0.00	1	0.26	2	0.00	1	0.00	1	0.23	2

Wall Ht. (ft)	Spacing (in) o.c.	362S137-mils (Fy) -33 (33)	-43 (33)	-54 (33)	-54 (50)	-68 (33)	-68 (50)	-97 (33)	-97 (50)	362S162-mils (Fy) -33 (33)	-43 (33)	-54 (33)	-54 (50)	-68 (33)	-68 (50)	-97 (33)	-97 (50)	362S200-mils (Fy) -33 (33)	-43 (33)	-54 (33)	-54 (50)	-68 (33)	-68 (50)	-97 (33)	-97 (50)	362S250-mils (Fy) -54 (50)	-68 (50)	-97 (50)	362S300-mils (Fy) -54 (50)	-68 (50)	-97 (50)
8	12	0.24	6	0.81	7	1.43	2.11	2.17	3.10	3.87	4.99	0.50	7	1.21	1.97	2.82	2.86	4.01	4.99	6.57	0.74	7	1.71	2.69	3.65	3.98	5.18	6.24	8.17	4.19	6.08	9.59	4.31	6.50	10.55
	16	0.00	6	0.38	6	0.95	7	1.71	7	1.66	2.67	3.40	4.59	0.06	6	0.75	6	1.46	7	2.37	7	2.31	3.54	4.47	6.11	0.25	6	1.20	7	2.15	3.14	3.46	4.67	5.69	7.68	3.64	5.50	9.07	3.77	5.92	9.97
	24	0.00	3	0.00	3	0.08	6	0.97	6	0.72	6	1.88	6	2.53	7	3.85	7	0.00	3	0.00	6	0.52	6	1.56	6	1.31	6	2.68	6	3.50	5.25	0.00	3	0.26	6	1.15	6	2.19	6	2.49	7	3.72	7	4.66	6.76	2.62	7	4.43	8.09	2.77	7	4.83	8.88
9	12	0.00	6	0.44	6	0.98	6	1.66	6	1.65	7	2.55	7	3.41	4.56	0.13	6	0.78	6	1.45	7	2.27	7	2.26	3.34	4.29	5.71	0.32	6	1.21	7	2.11	2.97	3.34	4.37	5.44	7.14	3.49	5.15	8.44	3.63	5.62	9.45
	16	0.00	3	0.00	3	0.45	6	1.21	6	1.07	6	2.07	6	2.84	7	4.07	7	0.00	3	0.26	6	0.88	6	1.77	6	1.65	7	2.82	7	3.68	5.17	0.00	6	0.64	6	1.49	6	2.40	6	2.73	3.79	4.79	6.57	2.86	7	4.49	7.83	3.01	4.94	8.76
	24	0.00	2	0.00	2	0.00	3	0.39	3	0.04	3	1.19	3	1.81	6	3.17	6	0.00	2	0.00	3	0.00	3	0.87	3	0.54	6	1.86	6	2.58	4.19	0.00	3	0.00	3	0.38	6	1.36	6	1.64	6	2.73	6	3.60	5.51	1.72	6	3.30	6.70	1.87	6	3.70	7	7.47
10	12	0.00	3	0.09	3	0.56	6	1.22	6	1.15	6	2.01	6	2.83	7	3.91	7	0.00	3	0.38	6	0.96	6	1.74	6	1.69	7	2.69	7	3.58	4.82	0.00	6	0.74	6	1.54	6	2.32	6	2.69	7	3.58	7	4.62	6.10	2.81	7	4.24	7.28	2.96	7	4.70	8.21
	16	0.00	2	0.00	3	0.00	3	0.74	3	0.52	6	1.49	6	2.19	6	3.36	6	0.00	2	0.00	3	0.35	6	1.21	6	1.02	6	2.12	6	2.90	4.24	0.00	3	0.13	3	0.87	6	1.71	6	2.03	6	2.95	6	3.90	5.47	2.12	6	3.54	7	6.60	2.27	6	3.96	7	7.43
	24	0.00	2	0.00	2	0.00	2	0.00	2	0.00	3	0.57	3	1.07	3	2.38	3	0.00	2	0.00	2	0.00	3	0.27	3	0.00	3	1.12	3	1.70	6	3.19	6	0.00	2	0.00	2	0.00	3	0.64	3	0.86	3	1.85	3	2.60	6	4.34	6	0.91	3	2.27	6	5.38	6	1.04	6	2.63	6	6.02	7
12	12	0.00	2	0.00	2	0.00	3	0.48	3	0.28	3	1.06	3	1.66	6	2.52	6	0.00	2	0.00	2	0.00	2	0.13	3	0.84	3	0.68	3	1.55	3	2.24	6	3.20	6	0.00	2	0.00	3	0.56	3	1.21	3	1.53	6	2.19	6	3.06	6	4.17	6	1.53	6	2.64	6	5.10	7	1.74	6	3.06	6	5.76	7
	16	0.00	1	0.00	2	0.00	2	0.00	2	0.00	2	0.54	2	0.99	3	1.96	3	0.00	2	0.00	2	0.00	2	0.30	2	0.00	3	0.97	3	1.52	3	2.60	3	0.00	2	0.00	2	0.00	3	0.60	3	0.82	3	1.55	3	2.28	6	3.51	6	0.83	3	1.91	6	4.38	6	0.99	3	2.27	6	4.93	6
	24	0.00	1	0.00	1	0.00	2	0.00	2	0.00	2	0.00	2	0.00	2	0.99	2	0.00	1	0.00	1	0.00	2	0.00	2	0.00	2	0.26	2	1.55	2	0.00	1	0.00	2	0.00	2	0.00	2	0.00	2	0.00	2	0.45	2	0.90	3	2.36	3	0.00	2	0.65	3	3.11	3	0.00	2	0.88	3	3.47	6
14	12	0.00	1	0.00	2	0.00	2	0.00	2	0.00	2	0.39	2	0.75	3	1.49	3	0.00	1	0.00	2	0.00	2	0.21	2	0.00	2	0.73	2	1.19	3	2.00	3	0.00	2	0.00	2	0.00	2	0.43	2	0.62	3	1.18	3	1.80	3	2.71	3	0.61	3	1.46	3	3.40	6	0.76	3	1.77	3	3.85	6
	16	0.00	1	0.00	1	0.00	1	0.00	2	0.00	2	0.10	2	0.96	2	0.00	1	0.00	1	0.00	2	0.00	2	0.00	2	0.19	2	0.48	2	1.43	2	0.00	1	0.00	2	0.00	2	0.00	2	0.00	2	0.58	2	1.03	3	2.08	3	0.00	2	0.77	2	2.71	3	0.03	2	1.00	3	3.04	3
	24	0.00	1	0.00	1	0.00	1	0.00	1	0.00	1	0.00	1	0.00	2	0.06	2	0.00	1	0.00	1	0.00	1	0.00	1	0.00	1	0.00	2	0.44	2	0.00	1	0.00	1	0.00	1	0.00	2	0.00	2	0.00	2	0.00	2	0.00	2	1.00	2	0.00	2	0.00	2	1.50	2	0.00	2	0.00	2	1.64	2
16	12	0.00	1	0.00	1	0.00	1	0.00	1	0.00	2	0.00	2	0.12	2	0.80	2	0.00	1	0.00	1	0.00	2	0.00	2	0.00	2	0.19	2	0.43	2	1.17	2	0.00	1	0.00	1	0.00	2	0.00	2	0.00	2	0.50	2	0.87	2	1.70	2	0.00	2	0.66	2	2.21	3	0.07	2	0.85	2	2.49	3
	16	0.00	1	0.00	1	0.00	1	0.00	1	0.00	1	0.00	1	0.00	2	0.31	2	0.00	1	0.00	1	0.00	1	0.00	1	0.00	1	0.00	2	0.64	2	0.00	1	0.00	1	0.00	1	0.00	2	0.00	2	0.00	2	0.00	2	0.14	2	1.12	2	0.00	2	0.02	2	1.55	2	0.00	2	0.13	2	1.73	2
	24	0.00	1	0.00	1	0.00	1	0.00	1	0.00	1	0.00	1	0.00	1	0.00	1	0.00	1	0.00	1	0.00	1	0.00	1	0.00	1	0.00	1	0.00	1	0.00	1	0.00	1	0.00	1	0.00	1	0.00	1	0.00	1	0.00	1	0.00	1	0.00	1	0.00	1	0.00	1	0.43	2	0.00	1	0.00	1	0.42	2

Wall Ht. (ft)	Spacing (in) o.c.	400S137-mils (Fy) -33 (33)	-43 (33)	-54 (33)	-54 (50)	-68 (33)	-68 (50)	-97 (33)	-97 (50)	400S162-mils (Fy) -33 (33)	-43 (33)	-54 (33)	-54 (50)	-68 (33)	-68 (50)	-97 (33)	-97 (50)	400S200-mils (Fy) -33 (33)	-43 (33)	-54 (33)	-54 (50)	-68 (33)	-68 (50)	-97 (33)	-97 (50)	400S250-mils (Fy) -54 (50)	-68 (50)	-97 (50)	400S300-mils (Fy) -54 (50)	-68 (50)	-97 (50)
8	12	0.40	7	1.04	1.75	2.50	2.67	3.72	4.36	5.49	0.70	1.50	2.35	3.32	3.48	4.81	5.88	7.82	0.97	2.06	3.15	4.28	4.52	6.14	7.27	9.68	4.74	7.04	11.33	4.92	7.43	12.26
	16	0.00	6	0.62	7	1.28	2.10	2.16	3.28	3.93	5.13	0.26	6	1.03	1.85	2.87	2.93	4.33	5.37	7.36	0.49	7	1.55	2.62	3.76	3.94	5.62	6.73	9.19	4.21	6.47	10.81	4.39	6.86	11.69
	24	0.00	3	0.00	6	0.41	6	1.35	6	1.20	7	2.47	7	3.11	4.45	0.00	6	0.18	6	0.91	7	2.04	7	1.90	3.44	4.40	6.48	0.00	6	0.61	6	1.62	7	2.80	7	2.86	4.64	5.71	8.25	3.21	5.39	9.81	3.40	5.78	10.59
9	12	0.07	6	0.67	6	1.31	2.06	2.16	3.21	3.94	5.12	0.33	6	1.07	7	1.85	2.78	2.88	4.16	5.20	6.98	0.55	7	1.56	2.58	3.61	3.84	5.35	6.50	8.67	4.12	6.24	10.20	4.27	6.65	11.14
	16	0.00	3	0.18	6	0.76	6	1.59	6	1.56	7	2.70	7	3.41	4.67	0.00	6	0.53	6	1.27	7	2.26	7	2.24	3.60	4.59	6.42	0.00	6	0.98	7	1.96	3.01	3.16	4.74	5.85	8.08	3.48	5.55	9.57	3.64	5.96	10.45
	24	0.00	2	0.00	3	0.00	6	0.74	6	0.46	6	1.75	6	2.42	7	3.82	7	0.00	3	0.00	3	0.20	6	1.32	6	1.07	6	2.57	6	3.45	5.39	7	0.00	3	0.06	6	0.82	6	1.93	6	1.92	7	3.62	7	4.64	6.98	2.32	6	4.29	7	8.39	2.49	7	4.68	9.13
10	12	0.00	3	0.30	6	0.87	6	1.61	6	1.63	7	2.65	7	3.47	4.68	0.00	6	0.64	6	1.35	7	2.24	7	2.27	3.48	4.48	6.08	0.15	6	1.07	6	2.01	2.94	3.14	4.54	5.68	7.61	3.44	5.35	9.01	3.60	5.82	9.97
	16	0.00	3	0.00	3	0.27	6	1.09	6	0.96	6	2.07	6	2.84	7	4.14	7	0.00	3	0.06	6	0.70	6	1.67	6	1.56	6	2.86	6	3.79	5.45	0.00	3	0.43	6	1.32	6	2.29	6	2.39	7	3.86	7	4.93	6.94	2.73	7	4.58	8.29	2.89	7	5.03	9.16
	24	0.00	2	0.00	2	0.00	3	0.18	3	0.00	3	1.05	3	1.70	6	3.15	6	0.00	2	0.00	3	0.00	3	0.66	3	0.29	6	1.75	6	2.52	4.32	6	0.00	2	0.00	3	0.09	6	1.13	6	1.03	6	2.64	6	3.58	7	5.71	7	1.46	6	3.19	6	6.97	7	1.61	6	3.59	6	7.67	7
12	12	0.00	2	0.00	3	0.08	3	0.79	3	0.65	6	1.58	6	2.35	6	3.45	6	0.00	2	0.00	3	0.43	3	1.25	3	1.15	6	2.20	6	3.06	4.32	6	0.00	2	0.00	3	0.95	6	1.73	6	1.84	6	3.06	6	4.04	7	5.52	7	2.14	6	3.59	7	6.66	2.30	6	4.04	7	7.51	7
	16	0.00	2	0.00	2	0.00	2	0.23	2	0.00	3	0.96	3	1.61	6	2.81	6	0.00	2	0.00	2	0.00	3	0.64	3	0.37	3	1.53	3	2.26	3.63	6	0.00	2	0.00	3	0.19	3	1.03	3	1.00	6	2.27	6	3.18	6	4.78	6	1.35	6	2.75	6	5.84	7	1.50	6	3.15	6	6.57	7
	24	0.00	1	0.00	2	0.00	2	0.00	2	0.00	2	0.00	2	0.33	3	1.69	3	0.00	1	0.00	2	0.00	2	0.00	2	0.38	2	0.88	3	2.42	3	0.00	2	0.00	2	0.00	2	0.00	3	1.00	3	1.67	3	3.46	3	0.00	3	1.30	3	4.40	6	0.10	3	1.59	3	4.90	6
14	12	0.00	2	0.00	2	0.00	2	0.16	2	0.00	2	0.73	2	1.29	3	2.19	3	0.00	2	0.00	2	0.00	2	0.48	2	0.26	3	1.18	3	1.83	6	2.84	6	0.00	2	0.00	2	0.11	3	0.79	3	0.78	3	1.76	3	2.60	6	3.75	6	1.04	3	2.15	6	4.63	6	1.22	3	2.54	6	5.22	6
	16	0.00	1	0.00	1	0.00	2	0.00	2	0.00	2	0.14	2	0.55	2	1.57	2	0.00	1	0.00	2	0.00	2	0.00	2	0.55	2	1.03	3	2.17	3	0.00	2	0.00	2	0.00	2	0.12	2	0.00	3	1.06	3	1.72	3	3.02	3	0.28	2	1.33	3	3.82	6	0.40	3	1.64	3	4.28	6
	24	0.00	1	0.00	1	0.00	1	0.00	1	0.00	1	0.00	1	0.00	2	0.51	2	0.00	1	0.00	1	0.00	1	0.00	1	0.00	2	0.00	2	0.00	2	1.02	2	0.00	1	0.00	1	0.00	2	0.00	2	0.00	2	0.00	2	0.21	2	1.75	2	0.00	2	0.00	2	2.41	3	0.00	2	0.10	2	2.65	3
16	12	0.00	1	0.00	1	0.00	2	0.00	2	0.00	2	0.15	2	0.49	2	1.29	2	0.00	1	0.00	2	0.00	2	0.00	2	0.48	2	0.90	3	1.77	3	0.00	1	0.00	2	0.00	2	0.14	2	0.01	2	0.89	2	1.48	3	2.46	3	0.27	2	1.12	3	3.11	3	0.38	2	1.39	3	3.50	6
	16	0.00	1	0.00	1	0.00	1	0.00	2	0.00	2	0.00	2	0.00	2	0.72	2	0.00	1	0.00	1	0.00	1	0.00	1	0.00	2	0.00	2	0.13	2	1.15	2	0.00	1	0.00	1	0.00	2	0.00	2	0.00	2	0.24	2	0.63	2	1.77	2	0.00	2	0.37

ALLOWABLE AXIAL LOAD TABLES

50 PSF LATERAL LOAD

Wall Ht. (ft)	Spacing (in) o.c.	350S137-mils (Fy) -33 (33)	-43 (33)	-54 (33)	-54 (50)	-68 (33)	-68 (50)	-97 (33)	-97 (50)	350S162-mils (Fy) -33 (33)	-43 (33)	-54 (33)	-54 (50)	-68 (33)	-68 (50)	-97 (33)	-97 (50)	350S200-mils (Fy) -33 (33)	-43 (33)	-54 (33)	-54 (50)	-68 (33)	-68 (50)	-97 (33)	-97 (50)	350S250-mils (Fy) -54 (50)	-68 (50)	-97 (50)	350S300-mils (Fy) -54 (50)	-68 (50)	-97 (50)
8	12	0.006	0.406	0.947	1.667	1.90	2.56	3.33	4.50	0.096	0.766	1.437	2.307	2.51	3.38	4.30	5.81	0.296	1.207	2.10	3.03	3.34	4.45	5.47	7.29	3.54	5.24	8.61	3.67	5.69	9.55
	16	0.003	0.006	0.396	1.196	1.376	2.066	2.76	4.01	0.003	0.216	0.836	1.786	1.937	2.837	3.67	5.25	0.006	0.596	1.467	2.437	2.72	3.85	4.81	6.70	2.89	4.56	7.99	3.03	4.99	8.85
	24	0.002	0.003	0.003	0.333	0.406	1.146	1.726	3.106	0.002	0.003	0.003	0.833	0.886	1.846	2.526	4.246	0.003	0.003	0.306	1.346	1.586	2.756	3.587	5.617	1.706	3.327	6.82	1.846	3.717	7.54
9	12	0.003	0.003	0.466	1.176	1.376	1.976	2.767	3.947	0.003	0.296	0.886	1.716	1.907	2.687	3.53	4.88	0.006	0.666	1.466	2.326	2.63	3.60	4.59	6.20	2.797	4.27	7.40	2.93	4.71	8.33
	16	0.002	0.003	0.003	0.663	0.786	1.426	2.106	3.366	0.002	0.003	0.226	1.146	1.266	2.076	2.827	4.267	0.003	0.003	0.766	1.666	1.946	2.946	3.83	5.53	2.066	3.527	6.69	2.206	3.93	7.51
	24	0.002	0.002	0.002	0.002	0.003	0.443	0.903	2.303	0.002	0.002	0.003	0.143	0.113	1.003	1.546	3.146	0.002	0.002	0.003	0.503	0.686	1.756	2.456	4.336	0.763	2.176	5.386	0.896	2.516	6.027
10	12	0.002	0.003	0.033	0.723	0.876	1.426	2.106	3.166	0.002	0.003	0.376	1.176	1.326	2.026	2.786	3.986	0.003	0.173	0.886	1.656	1.966	2.806	3.727	5.147	2.056	3.357	6.21	2.216	3.787	6.99
	16	0.002	0.002	0.002	0.192	0.243	0.853	1.386	2.546	0.002	0.002	0.003	0.583	0.643	1.393	2.016	3.326	0.002	0.003	0.133	0.983	1.216	2.106	2.906	4.436	1.296	2.566	5.447	1.436	2.946	6.11
	24	0.001	0.002	0.002	0.002	0.002	0.002	0.123	1.463	0.001	0.002	0.002	0.002	0.002	0.292	0.663	2.163	0.002	0.002	0.002	0.002	0.003	0.883	1.433	3.163	0.003	1.173	4.066	0.053	1.453	4.526
12	12	0.001	0.002	0.002	0.022	0.052	0.532	0.953	1.833	0.002	0.002	0.002	0.322	0.363	0.943	1.453	2.433	0.002	0.002	0.003	0.603	0.813	1.483	2.186	3.286	0.833	1.823	4.086	0.993	2.186	4.616
	16	0.001	0.001	0.002	0.002	0.002	0.002	0.222	1.222	0.001	0.002	0.002	0.002	0.002	0.322	0.663	1.773	0.001	0.002	0.002	0.002	0.042	0.792	1.303	2.563	0.082	1.043	3.306	0.172	1.313	3.706
	24	0.001	0.001	0.001	0.001	0.001	0.001	0.002	0.172	0.001	0.001	0.001	0.001	0.002	0.002	0.002	0.642	0.001	0.001	0.002	0.002	0.002	0.002	0.002	1.322	0.002	0.002	1.923	0.002	0.002	2.103
14	12	0.001	0.001	0.001	0.001	0.002	0.002	0.132	0.912	0.001	0.001	0.002	0.002	0.002	0.212	0.482	1.342	0.001	0.002	0.002	0.002	0.002	0.582	0.993	1.953	0.012	0.772	2.543	0.092	0.983	2.863
	16	0.001	0.001	0.001	0.001	0.001	0.001	0.002	0.342	0.001	0.001	0.001	0.001	0.002	0.002	0.002	0.732	0.001	0.001	0.001	0.001	0.002	0.002	0.162	1.282	0.002	0.032	1.792	0.002	0.152	1.993
	24	0.001	0.001	0.001	0.001	0.001	0.001	0.001	0.001	0.001	0.001	0.001	0.001	0.001	0.001	0.001	0.001	0.001	0.001	0.001	0.001	0.001	0.001	0.002	0.122	0.001	0.001	0.492	0.001	0.002	0.482
16	12	0.001	0.001	0.001	0.001	0.001	0.001	0.002	0.312	0.001	0.001	0.001	0.001	0.001	0.001	0.002	0.612	0.001	0.001	0.001	0.001	0.002	0.002	0.172	1.062	0.002	0.072	1.472	0.002	0.172	1.642
	16	0.001	0.001	0.001	0.001	0.001	0.001	0.001	0.001	0.001	0.001	0.001	0.001	0.001	0.001	0.001	0.051	0.001	0.001	0.001	0.001	0.001	0.002	0.432	0.001	0.001	0.001	0.772	0.001	0.002	0.822
	24	0.001	0.001	0.001	0.001	0.001	0.001	0.001	0.001	0.001	0.001	0.001	0.001	0.001	0.001	0.001	0.001	0.001	0.001	0.001	0.001	0.001	0.001	0.001	0.001	0.001	0.001	0.001	0.001	0.001	0.001

Wall Ht. (ft)	Spacing (in) o.c.	362S137-mils (Fy) -33 (33)	-43 (33)	-54 (33)	-54 (50)	-68 (33)	-68 (50)	-97 (33)	-97 (50)	362S162-mils (Fy) -33 (33)	-43 (33)	-54 (33)	-54 (50)	-68 (33)	-68 (50)	-97 (33)	-97 (50)	362S200-mils (Fy) -33 (33)	-43 (33)	-54 (33)	-54 (50)	-68 (33)	-68 (50)	-97 (33)	-97 (50)	362S250-mils (Fy) -54 (50)	-68 (50)	-97 (50)	362S300-mils (Fy) -54 (50)	-68 (50)	-97 (50)
8	12	0.006	0.496	1.077	1.817	1.78	2.78	3.52	4.69	0.166	0.867	1.58	2.48	2.45	3.66	4.60	6.23	0.376	1.33	2.28	3.26	3.59	4.79	5.83	7.80	3.77	5.65	9.20	3.90	6.07	10.11
	16	0.003	0.006	0.516	1.336	1.187	2.277	2.96	4.21	0.006	0.316	0.976	1.966	1.807	3.107	3.98	5.67	0.006	0.726	1.637	2.657	2.97	4.18	5.17	7.21	3.12	4.96	8.57	3.26	5.37	9.42
	24	0.002	0.003	0.003	0.463	0.086	1.336	1.936	3.336	0.003	0.003	0.006	0.996	0.626	2.086	2.827	4.647	0.003	0.006	0.456	1.546	1.826	3.066	3.93	6.10	1.916	3.687	7.39	2.066	4.07	8.10
9	12	0.003	0.076	0.586	1.326	1.216	2.186	2.98	4.19	0.003	0.396	1.026	1.896	1.807	2.947	3.83	5.30	0.006	0.786	1.647	2.547	2.88	3.93	4.95	6.71	3.01	4.65	7.98	3.16	5.11	8.93
	16	0.002	0.003	0.003	0.783	0.546	1.616	2.316	3.616	0.003	0.003	0.356	1.316	1.076	2.326	3.127	4.677	0.003	0.116	0.926	1.866	2.176	3.256	4.18	6.03	2.276	3.887	7.26	2.427	4.30	8.10
	24	0.002	0.002	0.002	0.002	0.003	0.603	1.116	2.566	0.002	0.002	0.003	0.273	0.003	1.213	1.816	3.526	0.002	0.003	0.003	0.673	0.896	2.026	2.786	4.796	0.956	2.486	5.927	1.096	2.856	6.587
10	12	0.002	0.003	0.123	0.853	0.676	1.616	2.356	3.496	0.003	0.003	0.506	1.346	1.186	2.266	3.077	4.387	0.003	0.276	1.036	1.866	2.196	3.116	4.07	5.62	2.286	3.717	6.77	2.446	4.14	7.62
	16	0.002	0.002	0.003	0.293	0.003	1.013	1.616	2.856	0.002	0.002	0.003	0.723	0.416	1.616	2.286	3.706	0.002	0.003	0.273	1.153	1.426	2.386	3.236	4.896	1.496	2.886	5.977	1.636	3.276	6.71
	24	0.001	0.002	0.002	0.002	0.002	0.002	0.323	1.733	0.002	0.002	0.002	0.002	0.003	0.453	0.903	2.493	0.002	0.002	0.002	0.002	0.073	1.103	1.726	3.576	0.103	1.433	4.546	0.223	1.736	5.066
12	12	0.002	0.002	0.002	0.102	0.003	0.663	1.153	2.093	0.002	0.002	0.002	0.432	0.153	1.113	1.696	2.746	0.002	0.002	0.033	0.753	0.993	1.703	2.476	3.676	1.003	2.096	4.556	1.173	2.466	5.137
	16	0.001	0.002	0.002	0.002	0.002	0.062	0.383	1.453	0.001	0.002	0.002	0.002	0.002	0.462	0.873	2.053	0.002	0.002	0.002	0.052	0.183	0.983	1.563	2.923	0.202	1.253	3.726	0.313	1.543	4.176
	24	0.001	0.001	0.001	0.001	0.002	0.002	0.002	0.352	0.001	0.001	0.001	0.001	0.002	0.002	0.002	0.862	0.001	0.001	0.002	0.002	0.002	0.002	0.002	1.612	0.002	0.002	2.263	0.002	0.002	2.493
14	12	0.001	0.001	0.002	0.002	0.002	0.012	0.262	1.092	0.001	0.001	0.002	0.002	0.002	0.322	0.652	1.562	0.001	0.002	0.002	0.002	0.102	0.722	1.213	2.233	0.112	0.933	2.883	0.202	1.183	3.246
	16	0.001	0.001	0.001	0.001	0.001	0.001	0.002	0.492	0.001	0.001	0.001	0.001	0.002	0.002	0.002	0.912	0.001	0.001	0.002	0.002	0.002	0.052	0.332	1.522	0.002	0.152	2.083	0.002	0.302	2.313
	24	0.001	0.001	0.001	0.001	0.001	0.001	0.001	0.001	0.001	0.001	0.001	0.001	0.001	0.001	0.001	0.001	0.001	0.001	0.001	0.001	0.001	0.001	0.002	0.302	0.001	0.002	0.712	0.001	0.002	0.722
16	12	0.001	0.001	0.001	0.001	0.001	0.001	0.002	0.432	0.001	0.001	0.001	0.001	0.001	0.001	0.002	0.772	0.001	0.001	0.001	0.001	0.002	0.082	0.322	1.252	0.002	0.172	1.712	0.002	0.302	1.913
	16	0.001	0.001	0.001	0.001	0.001	0.001	0.001	0.001	0.001	0.001	0.001	0.001	0.001	0.001	0.001	0.171	0.001	0.001	0.001	0.001	0.001	0.001	0.002	0.592	0.001	0.002	0.972	0.001	0.002	1.042
	24	0.001	0.001	0.001	0.001	0.001	0.001	0.001	0.001	0.001	0.001	0.001	0.001	0.001	0.001	0.001	0.001	0.001	0.001	0.001	0.001	0.001	0.001	0.001	0.001	0.001	0.001	0.001	0.001	0.001	0.002

Wall Ht. (ft)	Spacing (in) o.c.	400S137-mils (Fy) -33 (33)	-43 (33)	-54 (33)	-54 (50)	-68 (33)	-68 (50)	-97 (33)	-97 (50)	400S162-mils (Fy) -33 (33)	-43 (33)	-54 (33)	-54 (50)	-68 (33)	-68 (50)	-97 (33)	-97 (50)	400S200-mils (Fy) -33 (33)	-43 (33)	-54 (33)	-54 (50)	-68 (33)	-68 (50)	-97 (33)	-97 (50)	400S250-mils (Fy) -54 (50)	-68 (50)	-97 (50)	400S300-mils (Fy) -54 (50)	-68 (50)	-97 (50)
8	12	0.106	0.727	1.40	2.19	2.28	3.39	4.04	5.22	0.377	1.15	1.97	2.98	3.06	4.45	5.49	7.47	0.607	1.67	2.75	3.89	4.08	5.75	6.87	9.31	4.34	6.61	10.94	4.52	7.00	11.83
	16	0.006	0.216	0.837	1.717	1.67	2.87	3.52	4.79	0.006	0.596	1.37	2.45	2.40	3.87	4.87	6.91	0.036	1.077	2.11	3.27	3.39	5.12	6.21	8.71	3.70	5.92	10.30	3.89	6.31	11.14
	24	0.003	0.003	0.006	0.826	0.536	1.906	2.537	3.967	0.003	0.006	0.266	1.466	1.196	2.816	3.71	5.85	0.003	0.006	0.926	2.136	2.107	3.957	4.98	7.58	2.517	4.62	9.09	2.697	5.01	9.81
9	12	0.006	0.296	0.906	1.706	1.717	2.827	3.54	4.78	0.006	0.666	1.417	2.397	2.39	3.73	4.74	6.56	0.146	1.127	2.11	3.16	3.32	4.89	6.01	8.23	3.64	5.72	9.73	3.80	6.13	10.62
	16	0.003	0.003	0.266	1.156	1.006	2.216	2.90	4.23	0.003	0.046	0.726	1.786	1.647	3.077	4.01	5.90	0.006	0.436	1.386	2.466	2.52	4.17	5.23	7.52	2.897	4.90	8.97	3.05	5.31	9.78
	24	0.002	0.002	0.003	0.153	0.003	1.103	1.736	3.236	0.002	0.003	0.003	0.683	0.276	1.876	2.666	4.686	0.003	0.003	0.056	1.196	1.066	2.846	3.797	6.217	1.526	3.426	7.55	1.686	3.797	8.21
10	12	0.003	0.003	0.416	1.226	1.126	2.216	3.007	4.277	0.003	0.206	0.866	1.816	1.737	3.017	3.95	5.60	0.006	0.586	1.486	2.456	2.577	4.037	5.12	7.10	2.907	4.77	8.47	3.06	5.22	9.36
	16	0.002	0.003	0.003	0.623	0.356	1.556	2.266	3.636	0.002	0.003	0.116	1.116	0.906	2.296	3.137	4.877	0.003	0.003	0.686	1.696	1.696	3.236	4.24	6.31	2.076	3.877	7.61	2.236	4.297	8.39
	24	0.002	0.002	0.002	0.002	0.003	0.373	0.933	2.473	0.002	0.002	0.003	0.003	0.003	1.003	1.666	3.556	0.002	0.002	0.003	0.353	0.123	1.823	2.656	4.886	0.603	2.266	6.066	0.746	2.616	6.647
12	12	0.002	0.002	0.003	0.373	0.103	1.113	1.796	2.966	0.002	0.002	0.003	0.783	0.553	1.703	2.466	3.796	0.002	0.003	0.373	1.203	1.206	2.456	3.396	4.966	1.546	2.956	6.047	1.696	3.366	6.79
	16	0.001	0.002	0.002	0.002	0.002	0.412	0.943	2.233	0.002	0.002	0.002	0.092	0.003	0.943	1.543	3.003	0.002	0.002	0.003	0.413	0.253	1.613	2.406	4.096	0.643	1.996	5.096	0.773	2.346	5.706
	24	0.001	0.001	0.002	0.002	0.002	0.002	0.002	0.962	0.001	0.001	0.002	0.002	0.002	0.002	0.002	1.632	0.001	0.002	0.002	0.002	0.002	0.162	0.673	2.583	0.002	0.333	3.433	0.002	0.563	3.786
14	12	0.001	0.002	0.002	0.002	0.002	0.282	0.723	1.723	0.001	0.002	0.002	0.032	0.002	0.702	1.223	2.333	0.002	0.002	0.002	0.282	0.153	1.233	1.933	3.203	0.463	1.533	4.016	0.593	1.863	4.516
	16	0.001	0.001	0.001	0.001	0.002	0.002	0.002	1.022	0.001	0.001	0.002	0.002	0.002	0.002	0.312	1.572	0.001	0.002	0.002	0.002	0.002	0.432	0.933	2.363	0.002	0.612	3.083	0.002	0.843	3.433
	24	0.001	0.001	0.001	0.001	0.001	0.001	0.002	0.002	0.001	0.001	0.001	0.001	0.001	0.001	0.002	0.272	0.001	0.001	0.001	0.001	0.002	0.002	0.002	0.932	0.002	0.002	1.492	0.002	0.002	1.582
16	12	0.001	0.001	0.001	0.001	0.002	0.002	0.002	0.852	0.001	0.001	0.002	0.002	0.002	0.022	0.312	1.302	0.001	0.001	0.002	0.002	0.002	0.392	0.832	1.932	0.002	0.552	2.533	0.002	0.742	2.833
	16	0.001	0.001	0.001	0.001	0.001	0.001	0.002	0.212	0.001	0.001	0.001	0.001	0.001	0.001	0.002	0.592	0.001	0.001	0.001	0.001	0.002	0.002	0.002	1.162	0.002	0.002	1.662	0.002	0.002	1.812
	24	0.001	0.001	0.001	0.001	0.001	0.001	0.001	0.001	0.001	0.001	0.001	0.001	0.001	0.001	0.001	0.001	0.001	0.001	0.001	0.001	0.001	0.001	0.001	0.001	0.001	0.001	0.172	0.001	0.001	0.092

Wall Ht. (ft)	Spacing (in) o.c.	550S137-mils (Fy) -33 (33)	-43 (33)	-54 (33)	-54 (50)	-68 (33)	-68 (50)	-97 (33)	-97 (50)	550S162-mils (Fy) -33 (33)	-43 (33)	-54 (33)	-54 (50)	-68 (33)	-68 (50)	-97 (33)	-97 (50)	550S200-mils (Fy) -33 (33)	-43 (33)	-54 (33)	-54 (50)	-68 (33)	-68 (50)	-97 (33)	-97 (50)	550S250-mils (Fy) -54 (50)	-68 (50)	-97 (50)	550S300-mils (Fy) -54 (50)	-68 (50)	-97 (50)
8	12	0.65	1.49	2.37	2.97	3.50	4.24	5.72	6.70	1.07	2.14	3.30	4.44	4.79	6.30	7.90	10.16	1.43	2.75	4.23	5.75	6.12	8.25	10.13	13.65	6.01	9.14	15.95	6.30	9.36	16.99
	16	0.26	1.13	2.01	2.65	3.13	3.94	5.33	6.40	0.61	1.71	2.87	4.02	4.35	5.88	7.41	9.74	0.96	2.24	3.75	5.24	5.63	7.76	9.58	13.15	5.51	8.59	15.40	5.80	8.83	16.40
	24	0.006	0.42	1.31	2.03	2.42	3.33	4.56	5.81	0.007	0.88	2.03	3.21	3.49	5.08	6.46	8.93	0.05	1.26	2.81	4.24	4.68	6.82	8.52	12.18	4.54	7.53	14.33	4.83	7.80	15.23
9	12	0.33	1.18	2.06	2.69	3.18	3.97	5.36	6.43	0.69	1.76	2.91	4.04	4.40	5.91	7.45	9.76	1.03	2.28	3.76	5.18	5.61	7.65	9.50	12.91	5.47	8.47	15.08	5.76	8.72	16.06
	16	0.006	0.74	1.61	2.29	2.72	3.58	4.87	6.04	0.147	1.23	2.37	3.52	3.84	5.39	6.83	9.22	0.46	1.66	3.16	4.55	5.01	7.04	8.82	12.28	4.85	7.79	14.38	5.14	8.06	15.31
	24	0.006	0.006	0.757	1.537	1.83	2.82	3.90	5.29	0.006	0.236	1.357	2.527	2.77	4.38	5.64	8.18	0.006	0.507	2.03	3.35	3.84	5.88	7.50	11.06	3.67	6.49	13.04	3.95	6.79	13.85
10	12	0.006	0.85	1.72	2.38	2.82	3.65	4.96	6.10	0.297	1.35	2.47	3.56	3.95	5.46	6.93	9.28	0.61	1.79	3.24	4.56	5.04	6.97	8.79	12.05	4.88	7.73	14.07	5.17	8.04	15.00
	16	0.006	0.326	1.187	1.907	2.26	3.17	4.35	5.62	0.006	0.737	1.83	2.94	3.27	4.82	6.17	8.61	0.006	1.07	2.54	3.82	4.32	6.24	7.96	11.29	4.14	6.92	13.23	4.43	7.24	14.09
	24	0.003	0.006	0.176	0.996	1.216	2.266	3.19	4.71	0.003	0.006	0.646	1.786	2.017	3.617	4.74	7.33	0.006	0.006	1.227	2.437	2.95	4.88	6.38	9.83	2.757	5.38	11.62	3.03	5.73	12.34
12	12	0.003	0.156	0.976	1.676	2.017	2.927	4.02	5.32	0.006	0.506	1.527	2.517	2.86	4.24	5.70	8.07	0.006	0.786	2.147	3.247	3.79	5.46	7.15	10.05	3.59	6.10	11.77	3.87	6.49	12.62
	16	0.003	0.003	0.286	1.046	1.276	2.276	3.197	4.657	0.003	0.006	0.726	1.746	1.996	3.426	4.67	7.13	0.003	0.006	1.266	2.326	2.867	4.54	6.05	9.04	2.667	5.05	10.65	2.927	5.45	11.39
	24	0.002	0.002	0.003	0.003	0.003	1.083	1.676	3.406	0.002	0.003	0.003	0.343	0.436	1.936	2.806	5.436	0.002	0.003	0.003	0.683	1.176	2.866	4.056	7.196	0.976	3.156	8.607	1.196	3.536	9.14
14	12	0.002	0.003	0.213	0.933	1.156	2.106	2.976	4.396	0.002	0.003	0.596	1.496	1.756	2.986	4.167	6.267	0.003	0.003	1.076	1.976	2.526	3.936	5.40	7.90	2.356	4.457	9.32	2.576	4.887	10.08
	16	0.002	0.002	0.003	0.183	0.273	1.323	1.956	3.546	0.002	0.002	0.003	0.633	0.763	2.063	2.976	5.186	0.002	0.003	0.083	0.973	1.456	2.896	4.126	6.746	1.286	3.256	8.037	1.486	3.656	8.65
	24	0.001	0.002	0.002	0.002	0.002	0.002	0.163	2.033	0.001	0.002	0.002	0.002	0.002	0.432	0.873	3.293	0.002	0.002	0.002	0.002	0.003	1.073	1.876	4.686	0.003	1.153	5.746	0.003	1.473	6.106
16	12	0.002	0.002	0.002	0.222	0.323	1.273	1.906	3.396	0.002	0.002	0.003	0.603	0.743	1.843	2.716	4.556	0.002	0.003	0.133	0.903	1.366	2.576	3.756	5.886	1.213	2.936	7.026	1.396	3.356	7.717
	16	0.001	0.002	0.002	0.002	0.002	0.412	0.773	2.413	0.002	0.002	0.002	0.002	0.002	0.892	1.453	3.433	0.002	0.002	0.002	0.002	0.243	1.503	2.386	4.676	0.083	1.683	5.676	0.233	2.023	6.176
	24	0.001	0.001	0.001	0.001	0.002	0.002	0.002	0.742	0.001	0.001	0.002	0.002	0.002	0.002	0.002	1.522	0.001	0.002	0.002	0.002	0.002	0.002	0.003	2.583	0.002	0.002	3.323	0.002	0.002	3.513

Wall Ht. (ft)	Spacing (in) o.c.	600S137-mils (Fy) -33 (33)	-43 (33)	-54 (33)	-54 (50)	-68 (33)	-68 (50)	-97 (33)	-97 (50)	600S162-mils (Fy) -33 (33)	-43 (33)	-54 (33)	-54 (50)	-68 (33)	-68 (50)	-97 (33)	-97 (50)	600S200-mils (Fy) -33 (33)	-43 (33)	-54 (33)	-54 (50)	-68 (33)	-68 (50)	-97 (33)	-97 (50)	600S250-mils (Fy) -54 (50)	-68 (50)	-97 (50)	600S300-mils (Fy) -54 (50)	-68 (50)	-97 (50)
8	12	0.75	1.51	2.37	2.96	3.64	4.22	5.95	6.83	1.21	2.28	3.44	4.56	4.99	6.43	8.21	10.39	1.60	2.98	4.50	6.12	6.46	8.72	10.71	14.40	6.35	9.65	16.88	6.65	9.84	17.98
	16	0.39	1.16	2.02	2.66	3.32	3.92	5.60	6.57	0.78	1.89	3.05	4.18	4.59	6.06	7.78	10.03	1.16	2.50	4.05	5.64	6.01	8.27	10.22	13.94	5.89	9.15	16.37	6.18	9.36	17.43
	24	0.007	0.46	1.32	2.06	2.69	3.32	4.92	6.05	0.00	1.12	2.29	3.45	3.83	5.34	6.93	9.31	0.30	1.58	3.18	4.71	5.13	7.39	9.25	13.05	4.98	8.16	15.37	5.27	8.39	16.34

ALLOWABLE AXIAL LOAD TABLES

Combined Axial and Lateral Load Table Notes

1. Allowable axial loads listed in kips (1 kip = 1000 lb).
2. Allowable axial loads determined in accordance with section C5 of the NASPEC, with section B2.2 used for treatment of punchouts.
3. Listed lateral pressures and axial loads have not been modified for strength checks based on wind/earthquake or multiple transient loads.
4. Allowable axial loads based on bracing KyLy = KtLt = 48 inches.
5. Distortional buckling allowable moment and allowable axial load are based on kf = 0.
6. Superscripts represent exceeded deflection: 1 = L/120 exceeded; 2 = L/240 exceeded; 3 = L/360 exceeded; 6 = L/600 exceeded; 7 = L/720 exceeded.
7. Lateral pressures > 5 psf have been multiplied by 0.7 for deflection checks per IBC Table 1604.3, footnote f.
8. Studs are assumed to be adequately braced to develop full allowable moment.
9. Check end reactions for web crippling.
10. All tables based on simple (single) span condition.

CONSTRUCTION DETAILS

Detail A

Mutiple stud and stud to track attachment (single stud to track identical)

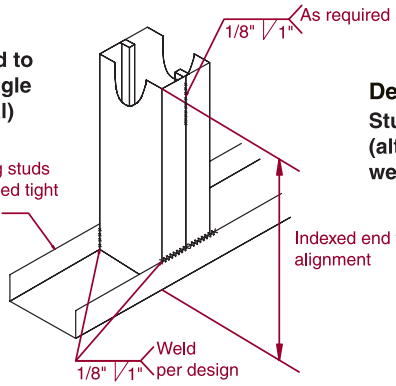

Detail B

Stud to track (alternate to welding)

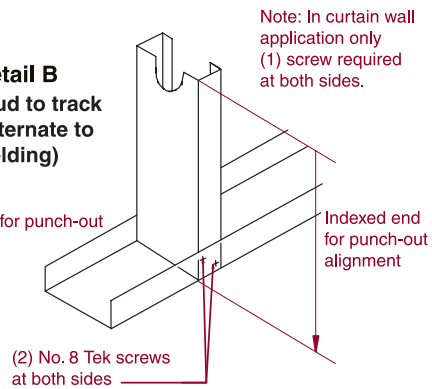

Typical load bearing wall panel

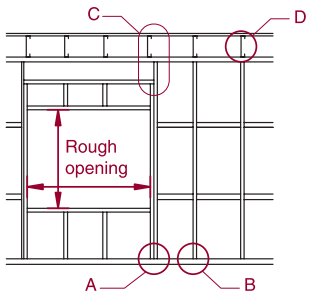

Detail C

Header detail

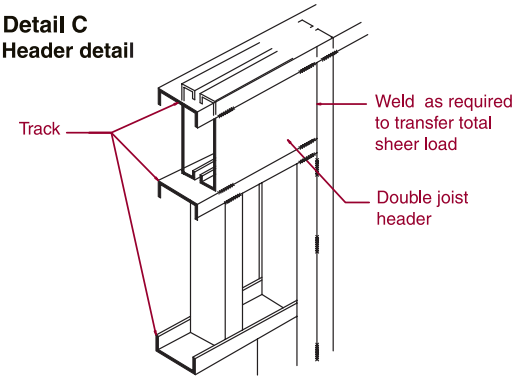

Detail D

Joist to track attachment

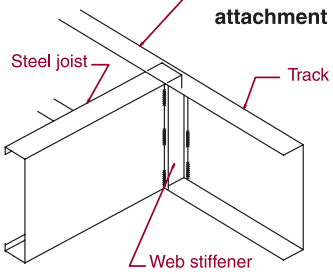

Steel bearing applications

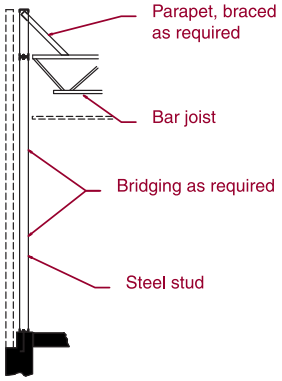

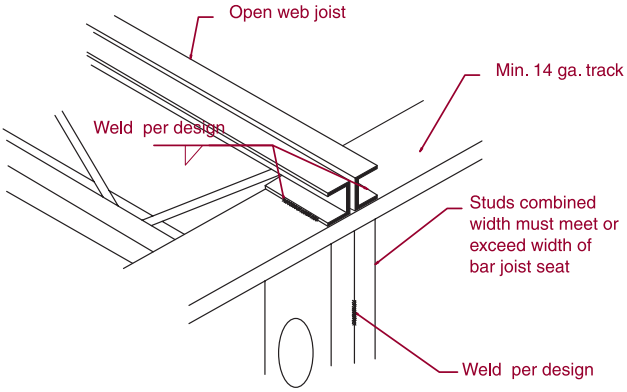

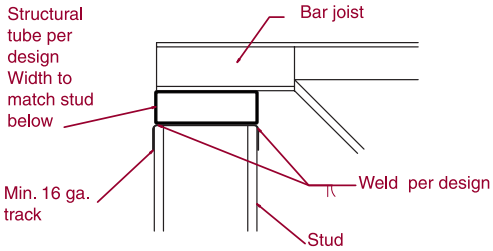

Alternative A - Bearing Wall - joist not aligned with studs

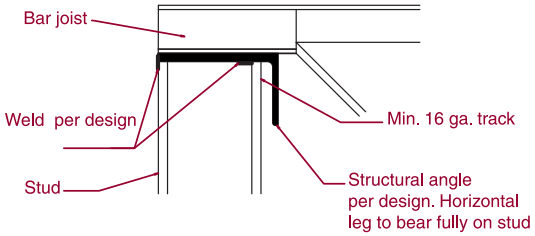

Alternative B - Bearing Wall - joist not aligned with studs

WEB CRIPPLING LOAD TABLES

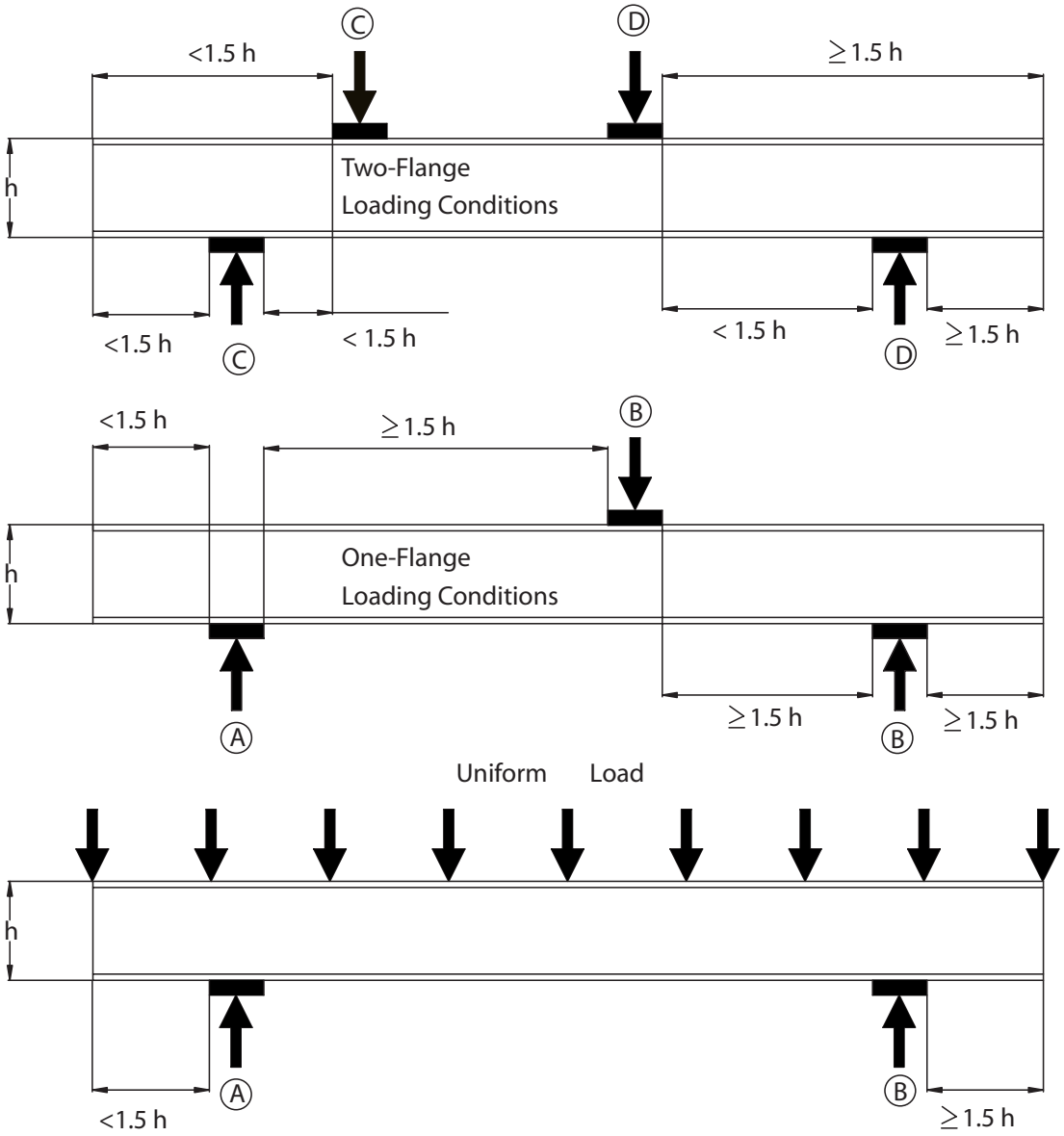

Ⓐ One-Flange End Loading

Ⓑ One-Flange Interior Loading

Ⓒ Two-Flange End Loading

Ⓓ Two-Flange Interior Loading

Ⓑ ↓ Point Load and Loading Condition

WEB CRIPPLING TABLE NOTES

1. Allowable web crippling loads are for members with stiffened flanges only (i.e. S-sections).
2. For Back-to-Back members the listed web crippling capacity is total for the two sections.
3. For Back-to-Back members the distance between web connectors and flanges should be kept to a minimum
4. Listed web crippling loads do not include the effect of punch-outs. Where punch-outs occur near bearing points web crippling capacity may be reduced. See NASPEC Section C3.4.2.
5. Listed web crippling 5. Listed allowable loads are based on members 'fastened to support', except back-to-back members under two-flange loading (Conditions 3 and 4)for which data for 'fastened to support' is unavailable in the NASPEC.do not include the effect of punch-outs.

WEB CRIPPLING LOAD TABLES- SINGLE MEMBERS

Section	Design t (in)	Fy (ksi)	Condition 1 Bearing Length (in)				Condition 2 Bearing Length (in)				Condition 3 Bearing Length (in)				Condition 4 Bearing Length (in)			
			1	3.5	4	6	1	3.5	4	6	1	3.5	4	6	1	3.5	4	6
162 S__-18	0.0188	33	55	89 1	95 12	112 12	87	125 1	131 12	151 12	45	64 1	67 12	76 12	122	161 1	166 12	186 12
162 S__-27	0.0283	33	122	194 1	205 1	242 12	218	304 1	317 1	361 12	111	151 1	157 1	178 12	290	371 1	383 1	425 12
162 S__-30	0.0312	33	148	233 1	246 1	290 1	269	373 1	388 1	442 1	137	185 1	192 1	217 1	356	452 1	466 1	516 1
162 S__-33	0.0346	33	180	282 1	297 1	350 1	336	462 1	481 1	545 1	170	229 1	237 1	267 1	441	557 1	574 1	634 1
250 S__-18	0.0188	33	52	84	89 2	106 12	85	122	128 2	147 12	37	51	54 2	61 12	109	145	150 2	168 12
250 S__-27	0.0283	33	117	186	196	231 12	213	298	310	354 12	96	130	135	153 12	268	343	354	393 12
250 S__-30	0.0312	33	141	223	235	277 1	264	365	381	433 1	119	161	167	189 1	330	420	433	479 1
250 S__-33	0.0346	33	173	271	285	336 1	330	453	472	535 1	150	201	209	235 1	411	519	535	591 1
250 S__-43	0.0451	33	287	443	466	547 1	580	780	810	913 1	267	351	364	407 1	720	892	918	1006 1
250 S__-54	0.0566	33	433	657	690	806 1	891	1178	1221	1369 1	430	556	574	639 1	1142	1392	1429	1558 1
250 S__-54	0.0566	50	656	996	1046	1222 1	1350	1785	1850	2075 1	652	842	870	968 1	1730	2109	2165	2361 1
250 S__-68	0.0713	33	654	977	1024	1191 1	1368	1778	1838	2050 1	693	880	907	1004 1	1815	2179	2233	2421 1
250 S__-68	0.0713	50	990	1480	1552	1805 1	2073	2693	2785	3106 1	1049	1333	1375	1521 1	2750	3302	3384	3669 1
350 S__-18	0.0188	33	49	80	84 2	100 2	83	119	124 2	143 2	28	40	42 2	48 2	98	130	134 2	150 2
350 S__-27	0.0283	33	112	177	187	221 2	209	292	304	347 2	81	111	115	130 2	247	316	327	362 2
350 S__-30	0.0312	33	135	214	225	266	259	359	373	425	103	139	144	163	306	389	402	445
350 S__-33	0.0346	33	166	260	274	323	324	445	463	526	131	175	182	205	384	484	499	551
350 S__-43	0.0451	33	278	428	451	528	571	768	798	900	240	315	326	365	680	842	866	949
350 S__-54	0.0566	33	420	638	670	783	879	1162	1204	1351	392	507	524	583	1086	1324	1359	1482
350 S__-54	0.0566	50	637	967	1016	1186	1331	1761	1825	2046	594	768	794	883	1645	2005	2059	2245
350 S__-68	0.0713	33	637	951	998	1160	1351	1756	1816	2025	640	813	839	928	1736	2085	2137	2317
350 S__-68	0.0713	50	965	1441	1512	1758	2047	2660	2751	3068	970	1232	1271	1406	2631	3159	3238	3510
362 S__-18	0.0188	33	49	79	84 2	99 2	82	119	124 2	143 2	27	39	40 2	46 2	97	128	132 2	149 2
362 S__-27	0.0283	33	111	177	186	220 2	209	291	303	346 2	80	108	113	127 2	245	313	324	359 2
362 S__-30	0.0312	33	135	213	224	265	258	358	373	424	101	136	141	160	304	386	398	441
362 S__-33	0.0346	33	165	259	273	322	323	444	462	525	129	173	179	202	381	480	495	547
362 S__-43	0.0451	33	277	427	449	526	570	767	796	898	236	311	322	360	675	836	860	943
362 S__-54	0.0566	33	419	636	668	780	877	1160	1202	1348	388	501	518	577	1079	1316	1351	1473
362 S__-54	0.0566	50	634	963	1012	1182	1329	1758	1822	2043	588	760	785	874	1635	1994	2047	2232
362 S__-68	0.0713	33	635	948	995	1157	1349	1753	1813	2022	635	806	831	920	1728	2074	2126	2305
362 S__-68	0.0713	50	962	1437	1507	1752	2044	2657	2747	3064	961	1221	1259	1393	2618	3143	3221	3492
362 S__-97	0.1017	33	1206	1755	1837	2120	2626	3323	3427	3787	1333	1651	1698	1862	3547	4166	4258	4578
362 S__-97	0.1017	50	1827	2659	2783	3212	3978	5035	5192	5738	2020	2501	2573	2821	5374	6313	6452	6936
400 S__-27	0.0283	33	109	174	183	217 2	207	289	301	344 2	75	102	106	120 2	238	305	315	349 2
400 S__-30	0.0312	33	133	210	221	261	257	356	370	421	95	129	134	151	296	376	388	429
400 S__-33	0.0346	33	163	256	269	317	322	442	460	522	122	164	170	192	372	469	483	534
400 S__-43	0.0451	33	274	422	444	520	567	763	792	893	227	299	309	346	662	819	843	924
400 S__-54	0.0566	33	415	629	661	772	873	1155	1197	1342	376	485	502	558	1061	1293	1328	1448
400 S__-54	0.0566	50	628	954	1002	1170	1323	1750	1813	2034	569	735	760	846	1607	1960	2012	2194
400 S__-68	0.0713	33	629	940	986	1147	1344	1746	1806	2014	617	784	809	895	1702	2044	2094	2271
400 S__-68	0.0713	50	953	1424	1494	1737	2036	2646	2736	3051	936	1188	1226	1356	2579	3096	3173	3440
400 S__-97	0.1017	33	1197	1742	1823	2105	2617	3312	3415	3774	1305	1616	1662	1822	3504	4116	4207	4523
400 S__-97	0.1017	50	1814	2640	2762	3189	3965	5018	5174	5718	1978	2448	2518	2761	5309	6236	6374	6852
550 S__-27	0.0283	33	103	164	173	205 2	202	282	294	336 2	58	79	82	93 2	214	274	283	314 2
550 S__-30	0.0312	33	126	199	210	248	251	348	362	412	76	103	106	120	268	341	351	389
550 S__-33	0.0346	33	155	243	256	302	315	432	450	511	100	134	139	157	339	428	441	487
550 S__-43	0.0451	33	262	405	426	499	556	749	778	877	195	256	265	297	614	760	782	858
550 S__-54	0.0566	33	400	607	638	745	859	1136	1177	1320	331	428	443	493	995	1213	1246	1358
550 S__-54	0.0566	50	606	920	966	1128	1302	1722	1784	2001	502	649	671	746	1508	1838	1887	2058
550 S__-68	0.0713	33	609	910	955	1111	1324	1721	1780	1985	557	707	729	807	1611	1934	1982	2149
550 S__-68	0.0713	50	923	1380	1447	1683	2007	2608	2697	3007	844	1071	1105	1223	2441	2931	3003	3256
550 S__-97	0.1017	33	1166	1697	1776	2050	2585	3272	3373	3728	1205	1492	1535	1683	3352	3937	4024	4326
550 S__-97	0.1017	50	1766	2571	2691	3106	3917	4957	5111	5648	1826	2261	2325	2550	5078	5965	6097	6555
600 S__-30	0.0312	33	124	196	206	243	249	345	359	409	70	95	98	111	260	330	340	377
600 S__-33	0.0346	33	153	240	253	297	313	430	447	507	93	125	130	146	329	416	429	473
600 S__-43	0.0451	33	259	400	420	493	553	745	773	872	185	243	252	282	600	743	764	838
600 S__-54	0.0566	33	395	600	631	736	855	1131	1172	1314	318	411	425	473	975	1189	1221	1331
600 S__-54	0.0566	50	599	909	956	1116	1295	1713	1775	1991	482	623	644	716	1478	1802	1850	2017
600 S__-68	0.0713	33	604	902	946	1100	1318	1713	1772	1976	539	684	706	781	1583	1901	1949	2113
600 S__-68	0.0713	50	914	1366	1433	1666	1998	2596	2685	2994	816	1036	1069	1183	2399	2881	2952	3201
600 S__-97	0.1017	33	1157	1684	1762	2034	2575	3260	3361	3714	1175	1455	1497	1641	3306	3884	3969	4267
600 S__-97	0.1017	50	1752	2551	2669	3081	3902	4939	5093	5628	1781	2205	2268	2487	5010	5885	6014	6466
800 S__-43	0.0451	33	247	381	401	470	542	730	757	854	150	197	204	228	548	678	698	765
800 S__-54	0.0566	33	379	576	605	706	839	1110	1150	1290	270	349	361	402	904	1102	1131	1234
800 S__-54	0.0566	50	575	872	917	1070	1272	1682	1743	1955	409	529	547	608	1370	1670	1714	1869
800 S__-68	0.0713	33	582	870	912	1061	1297	1686	1744	1944	473	600	619	685	1485	1783	1827	1981
800 S__-68	0.0713	50	882	1318	1382	1607	1966	2555	2642	2946	716	910	939	1038	2250	2701	2768	3001
800 S__-97	0.1017	33	1123	1635	1711	1975	2541	3216	3316	3665	1068	1322	1360	1491	3142	3691	3773	4056
800 S__-97	0.1017	50	1702	2477	2592	2992	3850	4873	5025	5553	1618	2003	2060	2259	4761	5593	5716	6145
1000 S__-54	0.0566	33	365	554	582	680	826	1092	1132	1269	228	295	305	339	841	1026	1053	1148
1000 S__-54	0.0566	50	553	840	882	1031	1251	1655	1715	1923	346	447	462	514	1275	1554	1595	1740
1000 S__-68	0.0713	33	563	842	883	1027	1279	1662	1719	1917	415	527	544	602	1398	1679	1721	1865
1000 S__-68	0.0713	50	854	1275	1338	1555	1938	2518	2604	2904	629	799	824	912	2119	2544	2607	2826
1000 S__-97	0.1017	33	1094	1592	1666	1923	2511	3178	3277	3622	974	1206	1240	1360	2999	3523	3601	3871
1000 S__-97	0.1017	50	1657	2412	2525	2914	3805	4815	4965	5487	1476	1827	1879	2060	4545	5338	5456	5866
1200 S__-68	0.0713	33	547	816	857	996	1262	1640	1696	1892	363	462	476	527	1320	1585	1625	1762
1200 S__-68	0.0713	50	828	1237	1298	1509	1913	2485	2570	2866	551	699	721	798	2001	2402	2462	2669
1200 S__-97	0.1017	33	1068	1554	1626	1877	2484	3144	3242	3583	889	1101	1133	1242	2871	3372	3446	3705
1200 S__-97	0.1017	50	1618	2355	2464	2844	3764	4764	4912	5428	1348	1668	1716	1882	4350	5109	5222	5614
1400 S__-68	0.0713	33	531	793	832	968	1247	1621	1676	1869	316	401	414	458	1249	1500	1537	1666
1400 S__-68	0.0713	50	805	1202	1261	1466	1889	2455	2539	2831	479	608	627	694	1892	2272	2328	2525
1400 S__-97	0.1017	33	1043	1519	1589	1835	2459	3113	3210	3547	812	1005	1034	1134	2753	3234	3305	3553
1400 S__-97	0.1017	50	1581	2301	2408	2780	3726	4716	4863	5374	1230	1523	1567	1718	4171	4900	5008	5384

1. Bearing length to web height ratio, N/h exceeds limit of 2.
2. Bearing length to thickness ratio, N/t exceeds limit of 210.

WEB CRIPPLING LOAD TABLES- BACK-TO-BACK MEMBERS

Section	Design t (in)	Fy (ksi)	Condition 1 Bearing Length (in)						Condition 2 Bearing Length (in)						Condition 3 Bearing Length (in)						Condition 4 Bearing Length (in)					
			1	3.5		4		6	1	3.5		4		6	1	3.5		4		6	1	3.5		4		6
162 S__-18	0.0188	33	247	392	1	414	12	488	12	256	316	1	325	12	356	12	151	200	1	207	12	232	12	305	403	1	418	12	468	12
162 S__-27	0.0283	33	535	826	1	869	1	1020	12	609	730	1	748	1	811	12	368	472	1	487	1	540	12	771	987	1	1020	1	1131	12
162 S__-30	0.0312	33	642	985	1	1036	1	1213	1	747	890	1	911	1	985	1	454	577	1	595	1	659	1	957	1216	1	1255	1	1389	1
162 S__-33	0.0346	33	779	1186	1	1247	1	1457	1	926	1097	1	1122	1	1211	1	565	713	1	735	1	812	1	1200	1515	1	1561	1	1724	1
250 S__-18	0.0188	33	247	391	1	413	12	487	12	255	314	1	323	12	353	12	129	171	1	177	12	198	12	261	345	1	357	12	400	12
250 S__-27	0.0283	33	534	825	1	868	1	1018	12	605	726	1	744	1	806	12	329	421	1	435	1	482	12	688	881	1	910	1	1010	12
250 S__-30	0.0312	33	641	983	1	1034	1	1211	1	742	885	1	906	1	980	1	408	519	1	535	1	593	1	861	1094	1	1129	1	1249	1
250 S__-33	0.0346	33	777	1184	1	1245	1	1454	1	921	1091	1	1116	1	1204	1	512	647	1	666	1	736	1	1088	1373	1	1415	1	1562	1
250 S__-43	0.0451	33	1273	1904	1	1998	1	2323	1	1597	1862	1	1901	1	2038	1	910	1127	1	1159	1	1271	1	1964	2432	1	2501	1	2743	1
250 S__-54	0.0566	33	1895	2787	1	2919	1	3380	1	2484	2860	1	2916	1	3109	1	1461	1781	1	1828	1	1993	1	3159	3851	1	3954	1	4311	1
250 S__-54	0.0566	50	2871	4223	1	4423	1	5121	1	3764	4333	1	4418	1	4711	1	2213	2698	1	2770	1	3020	1	4786	5835	1	5990	1	6532	1
250 S__-68	0.0713	33	2832	4094	1	4281	1	4933	1	3877	4409	1	4488	1	4763	1	2347	2819	1	2889	1	3132	1	5077	6096	1	6247	1	6773	1
250 S__-68	0.0713	50	4291	6203	1	6487	1	7474	1	5874	6680	1	6800	1	7216	1	3557	4271	1	4377	1	4745	1	7692	9236	1	9465	1	10263	1
350 S__-18	0.0188	33	246	390	1	412	12	486	12	253	312	1	320	12	351	12	109	144	1	149	12	167	12	220	291	1	301	12	338	12
350 S__-27	0.0283	33	533	823	1	866	1	1016	12	602	722	1	740	1	802	12	292	374	1	386	1	429	12	611	783	1	808	1	897	12
350 S__-30	0.0312	33	640	981	1	1032	1	1208	1	739	880	1	901	1	975	1	366	465	1	480	1	531	1	771	981	1	1012	1	1120	1
350 S__-33	0.0346	33	776	1182	1	1242	1	1452	1	917	1086	1	1111	1	1198	1	463	585	1	603	1	665	1	984	1241	1	1279	1	1412	1
350 S__-43	0.0451	33	1272	1901	1	1995	1	2320	1	1590	1854	1	1893	1	2029	1	838	1037	1	1067	1	1170	1	1808	2239	1	2303	1	2525	1
350 S__-54	0.0566	33	1892	2783	1	2916	1	3375	1	2474	2849	1	2904	1	3097	1	1361	1659	1	1703	1	1857	1	2943	3588	1	3684	1	4016	1
350 S__-54	0.0566	50	2867	4217	1	4417	1	5114	1	3749	4316	1	4400	1	4693	1	2062	2514	1	2581	1	2814	1	4459	5436	1	5581	1	6085	1
350 S__-68	0.0713	33	2829	4089	1	4276	1	4927	1	3863	4393	1	4472	1	4746	1	2208	2652	1	2717	1	2946	1	4776	5735	1	5877	1	6372	1
350 S__-68	0.0713	50	4286	6196	1	6479	1	7466	1	5853	6657	1	6776	1	7191	1	3346	4018	1	4117	1	4464	1	7236	8689	1	8904	1	9654	1
362 S__-18	0.0188	33	246	390	1	412	12	486	12	253	311	1	320	12	350	12	107	141	1	146	12	164	12	215	285	1	295	12	330	12
362 S__-27	0.0283	33	533	823	1	866	1	1015	12	602	722	1	739	1	801	12	288	369	1	381	1	422	12	603	772	1	797	1	884	12
362 S__-30	0.0312	33	640	981	1	1032	1	1208	1	738	880	1	901	1	974	1	361	459	1	474	1	524	1	761	968	1	999	1	1105	1
362 S__-33	0.0346	33	776	1182	1	1242	1	1452	1	916	1085	1	1110	1	1197	1	458	578	1	595	1	657	1	972	1226	1	1264	1	1395	1
362 S__-43	0.0451	33	1271	1901	1	1994	1	2319	1	1589	1853	1	1892	1	2028	1	830	1027	1	1057	1	1159	1	1790	2217	1	2280	1	2501	1
362 S__-54	0.0566	33	1892	2783	1	2915	1	3375	1	2473	2847	1	2903	1	3096	1	1349	1645	1	1689	1	1842	1	2918	3558	1	3653	1	3983	1
362 S__-54	0.0566	50	2867	4217	1	4417	1	5113	1	3747	4314	1	4398	1	4691	1	2045	2493	1	2559	1	2790	1	4422	5391	1	5535	1	6035	1
362 S__-68	0.0713	33	2828	4089	1	4276	1	4927	1	3861	4392	1	4470	1	4744	1	2193	2633	1	2698	1	2925	1	4742	5694	1	5835	1	6326	1
362 S__-68	0.0713	50	4285	6195	1	6479	1	7465	1	5851	6654	1	6773	1	7188	1	3322	3989	1	4088	1	4432	1	7185	8627	1	8841	1	9585	1
362 S__-97	0.1017	33	5281	7432	1	7751	1	8861	1	7683	8590	1	8725	1	9193	1	4584	5385	1	5504	1	5917	1	9915	11646	1	11903	1	12797	1
362 S__-97	0.1017	50	8002	11260	1	11743	1	13425	1	11642	13016	1	13219	1	13929	1	6946	8159	1	8339	1	8965	1	15022	17646	1	18035	1	19389	1
400 S__-27	0.0283	33	533	822		865	1	1015	12	600	720		738	1	800	12	276	353		365	1	405	12	577	739		763	1	847	12
400 S__-30	0.0312	33	639	981		1031	1	1208	1	737	878		899	1	972	1	347	441		455	1	504	1	732	931		960	1	1063	1
400 S__-33	0.0346	33	776	1181		1242	1	1451	1	915	1083		1108	1	1195	1	442	557		574	1	634	1	937	1183		1219	1	1346	1
400 S__-43	0.0451	33	1271	1900		1993	1	2318	1	1587	1850		1889	1	2025	1	806	998		1026	1	1126	1	1739	2154		2215	1	2429	1
400 S__-54	0.0566	33	1891	2782		2914	1	3373	1	2470	2844		2899	1	3092	1	1317	1605		1648	1	1797	1	2848	3472		3564	1	3886	1
400 S__-54	0.0566	50	2866	4215		4415	1	5111	1	3743	4309		4393	1	4685	1	1995	2432		2497	1	2723	1	4315	5260		5401	1	5889	1
400 S__-68	0.0713	33	2827	4087		4274	1	4925	1	3857	4387		4465	1	4739	1	2147	2578		2642	1	2865	1	4644	5576		5714	1	6195	1
400 S__-68	0.0713	50	4284	6193		6476	1	7462	1	5844	6646		6765	1	7180	1	3253	3906		4003	1	4340	1	7036	8448		8658	1	9387	1
400 S__-97	0.1017	33	5280	7429	1	7748	1	8858	1	7676	8582	1	8716	1	9184	1	4508	5295	1	5412	1	5819	1	9750	11453	1	11705	1	12584	1
400 S__-97	0.1017	50	8000	11256	1	11740	1	13421	1	11630	13003	1	13206	1	13915	1	6830	8023	1	8200	1	8816	1	14772	17352	1	17735	1	19067	1
550 S__-27	0.0283	33	531	821		863		1013	12	597	716		733		795	12	233	298		308		341	12	487	624		644		715	12
550 S__-30	0.0312	33	638	979		1029		1205	1	732	873		894		966	1	298	378		390		432	1	627	798		823		911	1
550 S__-33	0.0346	33	774	1179		1239		1448	1	909	1077		1102		1188	1	384	484		499		551	1	815	1028		1060		1170	1
550 S__-43	0.0451	33	1269	1897		1990		2314	1	1579	1841		1879		2015	1	721	893		919		1007	1	1556	1927		1982		2174	1
550 S__-54	0.0566	33	1888	2778		2909		3368	1	2459	2831		2886		3078	1	1200	1463		1502		1638	1	2595	3164		3249		3542	1
550 S__-54	0.0566	50	2861	4208		4408		5104	1	3725	4289		4372		4663	1	1818	2217		2276		2482	1	3933	4794		4922		5367	1
550 S__-68	0.0713	33	2823	4082		4268		4918	1	3841	4369		4447		4719	1	1985	2384		2443		2649	1	4294	5156		5284		5728	1
550 S__-68	0.0713	50	4278	6185		6467		7452	1	5820	6619		6738		7150	1	3008	3612		3702		4013	1	6506	7812		8005		8680	1
550 S__-97	0.1017	33	5274	7421		7739		8847	1	7649	8552		8686		9152	1	4238	4978		5088		5470	1	9166	10767		11004		11830	1
550 S__-97	0.1017	50	7990	11243		11726		13405	1	11589	12957		13160		13866	1	6421	7543		7709		8288	1	13888	16313		16673		17925	1
600 S__-30	0.0312	33	638	978		1029		1204	1	731	871		892		965	1	283	359		371		410	1	596	757		781		865	1
600 S__-33	0.0346	33	774	1178		1238		1447	1	908	1075		1100		1186	1	366	462		477		526	1	778	982		1012		1117	1
600 S__-43	0.0451	33	1268	1896		1989		2313	1	1576	1838		1876		2011	1	696	862		886		972	1	1501	1859		1912		2097	1
600 S__-54	0.0566	33	1888	2776		2908		3367	1	2455	2827		2882		3073	1	1165	1420		1458		1590	1	2520	3072		3154		3439	1
600 S__-54	0.0566	50	2860	4207		4406		5101	1	3720	4283		4366		4657	1	1765	2152		2209		2409	1	3818	4654		4778		5210	1
600 S__-68	0.0713	33	2822	4080		4267		4916	1	3836	4363		4441		4713	1	1937	2326		2383		2584	1	4189	5030		5154		5589	1
600 S__-68	0.0713	50	4276	6182		6465		7449	1	5812	6611		6729		7141	1	2935	3524		3611		3915	1	6347	7621		7810		8467	1
600 S__-97	0.1017	33	5272	7418		7737		8844	1	7641	8543		8677		9142	1	4157	4883		4991		5366	1	8991	10562		10795		11605	1
600 S__-97	0.1017	50	7988	11240		11722		13401	1	11577	12944		13146		13852	1	6299	7399		7562		8130	1	13623	16002		16355		17583	1
800 S__-43	0.0451	33	1266	1892		1985		2309		1567	1827		1866		2000		603	747		769		843		1302	1613		1659		1819	
800 S__-54	0.0566	33	1885	2772		2903		3361		2443	2812		2867		3058		1038	1266		1300		1417		2246	2738		2811		3065	
800 S__-54	0.0566	50	2855	4200		4399		5093		3702	4261		4344		4633		1573	1918		1969		2147		3402	4148		4259		4643	
800 S__-68	0.0713	33	2818	4074		4260		4909		3819	4344		4421		4692		1762	2115		2168		2350		3810	4575		4688		5083	
800 S__-68	0.0713	50	4270	6173		6455		7438		5786	6581		6699		7109		2669	3205		3284		3561		5772	6931		7103		7701	
800 S__-97	0.1017	33	5265	7409		7727		8833		7612	8510		8644		9107		3867	4542		4642		4991		8363	9823		10040		10794	
800 S__-97	0.1017	50	7978	11226		11707		13384		11533	12895		13097		13799		5859	6882		7034		7562		12671	14883		15212		16354	
1000 S__-54	0.0566	33	1882	2768		2899		3356		2432	2800		2855		3044		927	1130		1160		1265		2005	2445		2510		2737	
1000 S__-54	0.0566	50	2851	4194		4393		5086		3685	4242		4325		4613		1405	1713		1758		1917		3038	3704		3803		4146	
1000 S__-68	0.0713	33	2814	4069		4255		4902		3804	4326		4404		4674		1608	1931		1979		2145		3478	4176		4280		4640	
1000 S__-68	0.0713	50	4264	6165		6447		7428		5764	6555		6673		7081		2437	2926		2998		3251		5270	6327		6484		7030	
1000 S__-97	0.1017	33	5260	7401		7718		8824		7587	8482		8615		9077		3613	4244		4337		4663		7813	9178		9380		10085	
1000 S__-97	0.1017	50	7969	11213		11695		13369		11495	12852		13053		13753		5474	6430		6572		7065		11839	13906		14213		15280	
1200 S__-68	0.0713	33	2811	4064		4250		4897		3790	4311		4388		4657		1470	1765		1809		1961		3179	3817		3912		4241	
1200 S__-68	0.0713	50	4259	6158		6439		7419		5743	6532		6649		7056		2227	2674		2741		2971		4817	5784		5927		6426	
1200 S__-97	0.1017	33	5254	7394		7711		8815		7564	8457		8589		9050		3385	3976		4063		4368		7320	8598		8788		9448	
1200 S__-97	0.1017	50	7961	11202		11683		13356		11461	12813		13014		13712		5128	6024		6156		6619		11091	13028		13315		14315	
1400 S__-68	0.0713	33	2808	4060		4245		4892		3778	4297		4374		4642		1343	1613		1653		1792		2905	3488		3574		3875	
1400 S__-68	0.0713	50	4255	6151		6433		7411		5724	6510		6627		7033		2035	2444		2504		2715		4401	5285		5416		5872	
1400 S__-97	0.1017	33	5250	7387		7704		8807		7543	8434		8566		9025		3175	3730		3812		4098		6867	8067		8245		8864	
1400 S__-97	0.1017	50	7954	11192		11673		13344		11429	12778		12978		13674		4811	5651		5776		6210		10405	12223		12492		13430	

1. Bearing length to web height ratio, N/h exceeds limit of 2.
2. Bearing length to thickness ratio, N/t exceeds limit of 210.

FLOOR JOIST SPAN TABLES

10 PSF DEAD LOAD AND 20 PSF LIVE LOAD

		L/360 Live Load Deflection						L/480 Live Load Deflection					
Section	Fy(ksi)	Single Span Spacing (in) 16			Two Equal Spans Spacing (in)			Single Span Spacing (in)			Two Equal Spans Spacing (in)		
600S162-33	33	14'6"	12'7"e	10'3"e	14'6"i	12'7"i	10'3"i	14'4"	12'7"e	10'3"e	14'6"i	12'7"i	10'3"i
600S200-33	33	15'6"	13'5"e	10'11"e	15'6"i	13'5"i	10'11"a	15'0"	13'5"e	10'11"e	15'6"i	13'5"i	10'11"a
600S162-43	33	17'2"	15'6"	12'8"	17'11"i	15'6"i	12'8"i	15'7"	14'2"	12'5"	17'6"i	15'6"i	12'8"i
600S200-43	33	18'0"	16'0"	13'1"	18'6"i	16'0"i	13'1"i	16'5"	14'11"	13'0"	18'5"i	16'0"i	13'1"i
600S250-43	33	18'11"	16'5"	13'5"e	19'0"i	16'5"i	13'5"i	17'2"	15'7"	13'5"e	19'0"i	16'5"i	13'5"i
600S162-54	33	18'5"	16'9"	14'7"	20'8"i	18'2"i	14'10"i	16'9"	15'2"	13'3"	18'9"	17'1"i	14'10"i
600S162-54	50	18'5"	16'9"	14'7"	20'8"	18'9"	16'5"i	16'9"	15'2"	13'3"	18'9"	17'1"	14'11"
600S200-54	33	19'4"	17'7"	15'4"	21'9"i	19'2"i	15'8"i	17'7"	16'0"	14'0"	19'9"i	17'11"i	15'8"i
600S200-54	50	19'4"	17'7"	15'4"	21'9"	19'9"	17'3"i	17'7"	16'0"	14'0"	19'9"	17'11"	15'8"i
600S250-54	33	20'3"	18'5"	15'7"	22'1"i	19'1"i	15'7"i	18'5"	16'9"	14'8"	20'8"i	18'10"i	15'7"i
600S250-54	50	20'3"	18'5"	16'1"	22'9"	20'8"i	17'10"i	18'5"	16'9"	14'8"	20'8"	18'10"	16'5"i
600S300-54	50	21'2"	19'2"	16'8"	23'7"	21'3"i	18'2"i	19'2"	17'5"	15'3"	21'7"	19'6"	17'0"i
600S162-68	33	19'9"	17'11"	15'8"	22'2"	20'2"i	17'3"i	17'11"	16'4"	14'3"	20'2"	18'4"	16'0"i
600S162-68	50	19'9"	17'11"	15'8"	22'2"	20'2"	17'7"	17'11"	16'4"	14'3"	20'2"	18'4"	16'0"
600S200-68	33	20'9"	18'10"	16'6"	23'4"	21'2"i	18'3"i	18'10"	17'2"	15'0"	21'2"	19'3"	16'10"i
600S200-68	50	20'9"	18'10"	16'6"	23'4"	21'2"	18'6"	18'10"	17'2"	15'0"	21'2"	19'3"	16'10"
600S250-68	33	21'9"	19'9"	17'3"	24'5"	22'3"i	18'9"i	19'9"	18'0"	15'8"	22'3"	20'2"	17'8"i
600S250-68	50	21'9"	19'9"	17'3"	24'5"	22'3"	19'5"	19'9"	18'0"	15'8"	22'3"	20'2"	17'8"
600S300-68	50	22'8"	20'8"	18'0"	25'6"	23'1"	20'2"i	20'8"	18'9"	16'4"	23'2"	21'0"	18'5"
600S162-97	33	21'11"	19'11"	17'4"	24'7"	22'4"	19'6"	19'11"	18'1"	15'9"	22'4"	20'3"	17'9"
600S162-97	50	21'11"	19'11"	17'4"	24'7"	22'4"	19'6"	19'11"	18'1"	15'9"	22'4"	20'3"	17'9"
600S200-97	33	23'1"	20'11"	18'4"	25'11"	23'6"	20'7"	20'11"	19'0"	16'8"	23'6"	21'4"	18'8"
600S200-97	50	23'1"	20'11"	18'4"	25'11"	23'6"	20'7"	20'11"	19'0"	16'8"	23'6"	21'4"	18'8"
600S250-97	33	24'3"	22'0"	19'3"	27'2"	24'8"	21'7"	22'0"	20'0"	17'6"	24'8"	22'5"	19'7"
600S250-97	50	24'3"	22'0"	19'3"	27'2"	24'8"	21'7"	22'0"	20'0"	17'6"	24'8"	22'5"	19'7"
600S300-97	50	25'3"	22'11"	20'1"	28'4"	25'9"	22'6"	22'11"	20'10"	18'3"	25'9"	23'5"	20'5"
800S162-33	33	16'9"e	14'6"e	11'10"e	16'9"a	14'6"a	10'9"a	16'9"e	14'6"e	11'10"e	16'9"a	14'6"a	10'9"a
800S200-33	33	18'0"e	15'7"e	12'8"e	18'0"a	15'1"a	11'2"a	18'0"e	15'7"e	12'8"e	18'0"a	15'1"a	11'2"a
800S162-43	33	20'2"	17'6"	14'3"e	20'2"i	17'6"i	14'3"i	19'6"	17'6"	14'3"e	20'2"i	17'6"i	14'3"i
800S200-43	33	21'7"	18'8"	15'3"e	21'7"i	18'8"i	15'3"i	20'7"	18'8"	15'3"e	21'7"i	18'8"i	15'3"i
800S250-43	33	22'2"	19'2"e	15'8"e	22'2"i	19'2"i	15'8"i	21'5"	19'2"e	15'8"e	22'2"i	19'2"i	15'8"i
800S162-54	33	23'3"	20'5"	16'8"	23'7"i	20'5"i	16'8"i	21'1"	19'2"	16'8"	23'7"i	20'5"i	16'8"i
800S162-54	50	23'3"	21'1"	18'4"	26'0"i	23'5"i	19'1"i	21'1"	19'2"	16'9"	23'8"	21'6"i	18'9"i
800S200-54	33	24'4"	22'1"	18'4"	26'0"i	22'6"i	18'4"i	22'1"	20'1"	17'6"	24'10"i	22'6"i	18'4"i
800S200-54	50	24'4"	22'1"	19'4"	27'4"	24'10"i	20'5"i	22'1"	20'1"	17'6"	24'10"	22'6"	19'8"i
800S250-54	33	25'4"	22'5"	18'3"	25'10"i	22'5"i	18'3"i	23'1"	20'11"	18'3"	25'10"i	22'5"i	18'3"i
800S250-54	50	25'4"	23'1"	20'2"	28'6"i	25'6"i	20'10"i	23'1"	20'11"	18'3"	25'10"	23'6"i	20'6"i
800S300-54	50	26'4"	23'10"	20'8"	29'3"i	25'11"i	21'2"i	23'11"	21'9"	18'11"	26'10"	24'4"i	21'1"i
800S162-68	33	24'11"	22'8"	19'5"	27'5"i	23'9"i	19'5"i	22'8"	20'7"	18'0"	25'5"i	23'1"i	19'5"i
800S162-68	50	24'11"	22'8"	19'9"	28'0"	25'5"	22'3"i	22'8"	20'7"	18'0"	25'5"	23'1"	20'2"
800S200-68	33	26'1"	23'9"	20'9"	29'4"i	26'5"i	21'7"i	23'9"	21'7"	18'10"	26'8"	24'2"i	21'2"i
800S200-68	50	26'1"	23'9"	20'9"	29'4"	26'8"	23'3"i	23'9"	21'7"	18'10"	26'8"	24'2"	21'2"
800S250-68	33	27'3"	24'9"	21'8"	30'7"i	27'0"i	22'0"i	24'9"	22'6"	19'8"	27'10"	25'3"i	22'0"i
800S250-68	50	27'3"	24'9"	21'8"	30'7"	27'10"	24'3"i	24'9"	22'6"	19'8"	27'10"	25'3"	22'1"
800S300-68	50	28'4"	25'9"	22'5"	31'9"	28'9"	24'10"i	25'9"	23'4"	20'5"	28'11"	26'3"	22'11"i
800S162-97	33	27'8"	25'2"	22'0"	31'1"	28'3"	24'8"i	25'2"	22'10"	20'0"	28'3"	25'8"	22'5"
800S162-97	50	27'8"	25'2"	22'0"	31'1"	28'3"	24'8"	25'2"	22'10"	20'0"	28'3"	25'8"	22'5"
800S200-97	33	29'0"	26'5"	23'1"	32'7"	29'7"	25'11"i	26'5"	24'0"	20'11"	29'7"	26'11"	23'6"
800S200-97	50	29'0"	26'5"	23'1"	32'7"	29'7"	25'11"	26'5"	24'0"	20'11"	29'7"	26'11"	23'6"
800S250-97	33	30'4"	27'7"	24'1"	34'1"	30'11"	27'1"i	27'7"	25'1"	21'11"	30'11"	28'2"	24'7"
800S250-97	50	30'4"	27'7"	24'1"	34'1"	30'11"	27'1"	27'7"	25'1"	21'11"	30'11"	28'2"	24'7"
800S300-97	50	31'7"	28'8"	25'1"	35'5"	32'2"	28'1"	28'8"	26'1"	22'9"	32'2"	29'3"	25'7"
1000S162-43	33	22'4"e	19'4"e	15'10"e	22'4"a	19'4"a	15'10"a	22'4"e	19'4"e	15'10"e	22'4"a	19'4"a	15'10"a
1000S200-43	33	24'1"e	20'11"e	17'1"e	24'1"a	20'11"a	17'0"a	24'1"e	20'11"e	17'1"e	24'1"a	20'11"a	17'0"a
10005250-43	33	24'10"e	21'6"e	17'6"e	24'10"a	21'6"a	17'6"a	24'10"e	21'6"e	17'6"e	24'10"a	21'6"a	17'6"a
10005162-54	33	26'4"	22'9"	18'7"e	26'4"i	22'9"i	18'7"i	25'2"	22'9"	18'7"e	26'4"i	22'9"i	18'7"i
10005162-54	50	27'7"	25'0"	21'2"	29'11"i	25'11"i	21'2"i	25'2"	22'10"	19'11"	28'2"i	25'6"i	21'2"i
10005200-54	33	28'3"	24'5"	20'0"e	28'3"i	24'5"i	20'0"i	26'4"	23'10"	20'0"e	28'3"i	24'5"i	20'0"i
10005200-54	50	28'10"	26'2"	22'9"	32'2"i	27'10"i	22'9"i	26'4"	23'10"	20'9"	29'5"i	26'8"i	22'9"i
10005250-54	33	29'1"	25'2"	20'7"e	29'1"i	25'2"i	20'7"i	27'6"	25'0"	20'7"e	29'1"i	25'2"i	20'7"i
10005250-54	50	30'3"	27'6"	23'4"	33'1"i	28'8"i	23'4"i	27'6"	25'0"	21'10"	30'10"i	28'1"i	23'4"i
10005300-54	50	31'3"	28'4"	23'9"	33'7"i	29'1"i	23'9"i	28'6"	25'10"	22'6"	31'10"i	28'10"i	23'9"i
10005162-68	33	30'0"	26'9"	21'10"	30'11"i	26'9"i	21'10"i	27'3"	24'9"	21'7"	30'7"i	26'9"i	21'10"i
10005162-68	50	30'0"	27'2"	23'8"	33'6"	30'5"i	25'0"i	27'3"	24'9"	21'7"	30'7"	27'9"	24'2"i
10005200-68	33	31'3"	28'5"	23'4"	33'0"i	28'7"i	23'4"i	28'5"	25'10"	22'7"	31'11"i	28'7"i	23'4"i
10005200-68	50	31'3"	28'5"	24'9"	35'0"	31'9"i	26'9"i	28'5"	25'10"	22'7"	31'11"	28'11"	25'3"i
10005250-68	33	32'6"	29'7"	24'10"	35'2"i	30'5"i	24'10"i	29'7"	26'10"	23'5"	33'2"i	30'2"i	24'10"i
10005250-68	50	32'6"	29'7"	25'10"	36'6"	33'2"i	27'6"i	29'7"	26'10"	23'5"	33'2"	30'2"	26'9"i
10005300-68	50	33'8"	30'7"	26'8"	37'9"	34'3"i	28'0"i	30'7"	27'10"	24'4"	34'4"	31'3"	27'2"i
10005162-97	33	33'4"	30'4"	26'6"	37'5"	33'5"i	27'4"i	30'4"	27'6"	24'1"	34'0"	30'11"	27'0"i
10005162-97	50	33'4"	30'4"	26'6"	37'5"	34'0"	29'9"	30'4"	27'6"	24'1"	34'0"	30'11"	27'0"
10005200-97	33	34'10"	31'8"	27'8"	39'1"	35'6"i	29'2"i	31'8"	28'9"	25'1"	35'6"	32'3"	28'2"i
10005200-97	50	34'10"	31'8"	27'8"	39'1"	35'6"	31'0"	31'8"	28'9"	25'1"	35'6"	32'3"	28'2"
10005250-97	33	36'3"	32'11"	28'9"	40'9"	37'0"i	31'11"i	32'11"	29'11"	26'2"	37'0"	33'7"	29'4"i
10005250-97	50	36'3"	32'11"	28'9"	40'9"	37'0"	32'4"	32'11"	29'11"	26'2"	37'0"	33'7"	29'4"
10005300-97	50	37'7"	34'2"	29'10"	42'3"	38'4"	33'6"	34'2"	31'0"	27'1"	38'4"	34'10"	30'5"
12005162-54	33	28'5"e	24'7"e	20'1"e	28'5"a	24'7"a	20'1"a	28'5"e	24'7"e	20'1"e	28'5"a	24'7"a	20'1"a
12005162-54	50	31'9"e	27'11"e	22'10"e	32'3"a	27'11"a	22'10"a	29'0"e	26'3"e	22'10"e	32'3"a	27'11"a	22'10"a
12005200-54	33	30'9"e	26'7"e	21'9"e	30'9"a	26'7"a	21'9"a	30'3"e	26'7"e	21'9"e	30'9"a	26'7"a	21'9"a
12005200-54	50	33'2"e	30'0"e	24'8"e	34'11"a	30'2"a	24'8"a	30'3"e	27'5"e	23'10"e	33'9"a	30'2"a	24'8"a
12005250-54	33	31'9"e	27'6"e	22'6"e	31'9"a	27'6"a	22'6"a	31'5"e	27'6"e	22'6"e	31'9"a	27'6"a	22'6"a
12005250-54	50	34'6"e	31'2"e	25'6"e	36'0"a	31'2"a	25'6"a	31'5"e	28'6"e	24'10"e	35'1"a	31'2"a	25'6"a
12005300-54	50	36'1"e	31'10"e	26'0"e	36'9"a	31'10"a	26'0"a	32'11"e	29'10"e	26'0"e	36'9"a	31'10"a	26'0"a
12005162-68	33	33'8"	29'2"	23'10"	33'8"i	29'2"i	23'10"i	31'7"	28'8"	23'10"	33'8"i	29'2"i	23'10"i
12005162-68	50	34'8"	31'5"	27'1"	38'4"i	33'2"i	27'1"i	31'7"	28'8"	24'11"	35'3"	32'0"i	27'1"i
12005200-68	33	36'1"	31'4"	25'7"	36'2"i	31'4"i	25'7"i	32'11"	29'10"	25'7"	36'2"i	31'4"i	25'7"i
12005200-68	50	36'1"	32'9"	28'6"	40'4"i	35'9"i	29'2"i	32'11"	29'10"	26'0"	36'9"	33'4"i	29'0"i
12005250-68	33	37'5"	32'5"	26'5"	37'5"i	32'5"i	26'5"i	34'2"	31'0"	26'5"	37'5"i	32'5"i	26'5"i
12005250-68	50	37'6"	34'0"	29'7"	41'11"i	36'11"i	30'1"i	34'2"	31'0"	27'0"	38'2"	34'8"i	30'1"i
12005300-68	50	38'11"	35'5"	30'8"	43'5"i	37'7"i	30'8"i	35'5"	32'2"	28'1"	39'9"	36'1"i	30'8"i
12005162-97	33	38'11"	35'4"	30'6"	43'2"i	37'5"i	30'6"i	35'4"	32'1"	28'1"	39'8"	36'1"i	30'6"i
12005162-97	50	38'11"	35'4"	30'11"	43'8"	39'8"	34'8"i	35'4"	32'1"	28'1"	39'8"	36'1"	31'6"
12005200-97	33	40'6"	36'10"	32'2"	45'6"i	39'11"i	32'7"i	36'10"	33'5"	29'3"	41'4"	37'7"i	32'7"i
12005200-97	50	40'6"	36'10"	32'2"	45'6"	41'4"	36'1"i	36'10"	33'5"	29'3"	41'4"	37'7"	32'10"
12005250-97	33	42'1"	38'2"	33'4"	47'2"i	41'4"i	33'9"i	38'2"	34'8"	30'4"	42'11"	39'0"i	33'9"i
12005250-97	50	42'1"	38'2"	33'4"	47'2"	42'11"	37'6"i	38'2"	34'8"	30'4"	42'11"	39'0"	34'1"
12005300-97	50	43'6"	39'6"	34'6"	48'10"	44'4"	38'9"i	39'6"	35'11"	31'4"	44'4"	40'4"	35'2"
14005162-54	33	30'2"e	26'1"e	21'4"e	30'2"a	26'1"a	21'4"a	30'2"e	26'1"e	21'4"e	30'2"a	26'1"a	21'4"a
14005162-54	50	34'0"e	29'6"e	24'1"e	34'0"a	29'6"a	24'1"a	32'7"e	29'6"e	24'1"e	34'0"a	29'6"a	24'1"a
14005200-54	33	32'9"e	28'4"e	23'2"e	32'9"a	28'4"a	23'2"a	32'9"e	28'4"e	23'2"e	32'9"a	28'4"a	23'2"a
14005200-54	50	37'0"e	32'1"e	26'2"e	37'0"a	32'1"a	25'7"a	34'0"e	30'10"e	26'2"e	37'0"a	32'1"a	25'7"a
14005250-54	33	34'0"e	29'6"e	24'1"e	34'0"a	29'6"a	24'0"a	34'0"e	29'6"e	24'1"e	34'0"a	29'6"a	24'0"a
14005250-54	50	38'6"e	33'4"e	27'2"e	38'6"a	33'4"a	25'10"a	35'4"e	32'0"e	27'2"e	38'6"a	33'4"a	25'10"a
14005300-54	50	39'5"e	34'1"e	27'10"e	39'5"a	34'1"a	26'0"a	36'5"e	32'11"e	27'10"e	39'5"a	34'1"a	26'0"a
14005162-68	33	35'11"	31'1"	25'5"	35'11"i	31'1"i	25'5"i	35'8"	31'1"	25'5"	35'11"i	31'1"i	25'5"i
14005162-68	50	39'1"	35'3"	28'9"	40'8"i	35'3"i	28'9"i	35'8"	32'4"	28'2"	39'9"	35'3"i	28'9"i
14005200-68	33	38'9"	33'6"	27'5"e	38'9"i	33'6"i	27'5"i	37'1"	33'6"	27'5"e	38'9"i	33'6"i	27'5"i
14005200-68	50	40'8"	36'10"	31'1"	44'0"i	38'1"i	31'1"i	37'1"	33'8"	29'3"	41'5"	37'6"i	31'1"i
14005250-68	33	40'3"	34'10"	28'5"e	40'3"i	34'10"i	28'5"i	38'6"	34'10"	28'5"e	40'3"i	34'10"i	28'5"i
14005250-68	50	42'2"	38'3"	32'3"	45'8"i	39'6"i	32'3"i	38'6"	34'11"	30'5"	43'0"i	38'11"i	32'3"i
14005300-68	50	43'7"	39'5"	33'0"	46'9"i	40'6"i	33'0"i	39'9"	36'0"	31'5"	44'5"i	40'1"i	33'0"i
14005162-97	33	44'5"	40'4"	32'11"	46'7"i	40'4"i	32'11"i	40'4"	36'8"	32'0"	45'4"i	40'4"i	32'11"i
14005162-97	50	44'5"	40'4"	35'2"	49'9"	45'1"	37'8"i	40'4"	36'8"	32'0"	45'4"	41'2"	35'10"
14005200-97	33	46'1"	41'11"	35'3"	49'10"i	43'2"i	35'3"i	41'11"	38'1"	33'3"	47'0"i	42'9"i	35'3"i
14005200-97	50	46'1"	41'11"	36'6"	51'8"	46'10"	40'5"i	41'11"	38'1"	33'3"	47'0"	42'9"	37'3"
14005250-97	33	47'9"	43'4"	36'7"	51'9"i	44'10"i	36'7"i	43'4"	39'5"	34'5"	48'8"i	44'3"i	36'7"i
14005250-97	50	47'9"	43'4"	37'10"	53'6"	48'7"	41'11"i	43'4"	39'5"	34'5"	48'8"	44'3"	38'7"
14005300-97	50	49'3"	44'9"	39'1"	55'3"	50'2"	42'11"i	44'9"	40'8"	35'6"	50'3"	45'8"	39'10"i

FLOOR JOIST SPAN TABLES

10 PSF DEAD LOAD AND 30 PSF LIVE LOAD

		L/360 Live Load Deflection						L/480 Live Load Deflection					
Section	Fy(ksi)	Single Span Spacing (in) 16			Two Equal Spans Spacing (in)			Single Span Spacing (in)			Two Equal Spans Spacing (in)		
600S162-33	33	12' 7" e	10' 11" e	8' 11" e	12' 7" i	10' 11" i	8' 11" a	12' 6" e	10' 11" e	8' 11" e	12' 7" i	10' 11" i	8' 11" a
600S200-33	33	13' 5" e	11' 7" e	9' 6" e	13' 5" i	11' 7" i	9' 6" a	13' 2" e	11' 7" e	9' 6" e	13' 5" i	11' 7" i	9' 6" a
600S162-43	33	15' 0"	13' 5"	11' 0" e	15' 6" i	13' 5" i	11' 0" i	13' 8"	12' 5"	10' 10" e	15' 4" i	13' 5" i	11' 0" i
600S200-43	33	15' 9"	13' 10"	11' 4" e	16' 0" i	13' 10" i	11' 4" i	14' 4"	13' 0"	11' 4" e	16' 0" i	13' 10" i	11' 4" i
600S250-43	33	16' 5"	14' 3"	11' 7" e	16' 5" i	14' 3" i	11' 7" i	15' 0"	13' 7"	11' 7" e	16' 5" i	14' 3" i	11' 7" i
600S162-54	33	16' 1"	14' 7"	12' 9"	18' 1" i	15' 9" i	12' 10" i	14' 7"	13' 3"	11' 7"	16' 5" i	14' 11" i	12' 10" i
600S162-54	50	16' 1"	14' 7"	12' 9"	18' 1"	16' 5"	14' 4" i	14' 7"	13' 3"	11' 7"	16' 5"	14' 11"	13' 0" i
600S200-54	33	16' 11"	15' 4"	13' 5"	19' 0" i	16' 7" i	13' 7" i	15' 4"	14' 0"	12' 2"	17' 3" i	15' 8" i	13' 7" i
600S200-54	50	16' 11"	15' 4"	13' 5"	19' 0"	17' 3" i	15' 1" i	15' 4"	14' 0"	12' 2"	17' 3"	15' 8"	13' 8" i
600S250-54	33	17' 9"	16' 1"	13' 6"	19' 1" i	16' 7" i	13' 6" i	16' 1"	14' 8"	12' 9"	18' 1" i	16' 5" i	13' 6" i
600S250-54	50	17' 9"	16' 1"	14' 1"	19' 11"	18' 1" i	15' 6" i	16' 1"	14' 8"	12' 9"	18' 1"	16' 5"	14' 4" i
600S300-54	50	18' 6"	16' 9"	14' 7"	20' 7"	18' 7" i	15' 9" i	16' 9"	15' 3"	13' 4"	18' 10"	17' 1"	14' 10" i
600S162-68	33	17' 3"	15' 8"	13' 8"	19' 4" i	17' 7" i	14' 11" i	15' 8"	14' 3"	12' 5"	17' 7"	16' 0" i	14' 0" i
600S162-68	50	17' 3"	15' 8"	13' 8"	19' 4"	17' 7"	15' 4"	15' 8"	14' 3"	12' 5"	17' 7"	16' 0"	14' 0"
600S200-68	33	18' 2"	16' 6"	14' 5"	20' 4" i	18' 6" i	15' 10" i	16' 6"	15' 0"	13' 1"	18' 6"	16' 10" i	14' 8" i
600S200-68	50	18' 2"	16' 6"	14' 5"	20' 4"	18' 6"	16' 2"	16' 6"	15' 0"	13' 1"	18' 6"	16' 10"	14' 8"
600S250-68	33	19' 0"	17' 3"	15' 1"	21' 4" i	19' 5" i	16' 2" i	17' 3"	15' 8"	13' 9"	19' 5"	17' 8" i	15' 5" i
600S250-68	50	19' 0"	17' 3"	15' 1"	21' 4"	19' 5"	16' 11" i	17' 3"	15' 8"	13' 9"	19' 5"	17' 8"	15' 5"
600S300-68	50	19' 10"	18' 0"	15' 9"	22' 3"	20' 2"	17' 7" i	18' 0"	16' 4"	14' 4"	20' 3"	18' 5"	16' 1"
600S162-97	33	19' 1"	17' 4"	15' 2"	21' 6"	19' 6"	17' 0" i	17' 4"	15' 9"	13' 9"	19' 6"	17' 9"	15' 6"
600S162-97	50	19' 1"	17' 4"	15' 2"	21' 6"	19' 6"	17' 0"	17' 4"	15' 9"	13' 9"	19' 6"	17' 9"	15' 6"
600S200-97	33	20' 2"	18' 4"	16' 0"	22' 7"	20' 7"	17' 11" i	18' 4"	16' 8"	14' 6"	20' 7"	18' 8"	16' 4"
600S200-97	50	20' 2"	18' 4"	16' 0"	22' 7"	20' 7"	17' 11"	18' 4"	16' 8"	14' 6"	20' 7"	18' 8"	16' 4"
600S250-97	33	21' 2"	19' 3"	16' 9"	23' 9"	21' 7"	18' 10" i	19' 3"	17' 6"	15' 3"	21' 7"	19' 7"	17' 2"
600S250-97	50	21' 2"	19' 3"	16' 9"	23' 9"	21' 7"	18' 10"	19' 3"	17' 6"	15' 3"	21' 7"	19' 7"	17' 2"
600S300-97	50	22' 1"	20' 1"	17' 6"	24' 9"	22' 6"	19' 8"	20' 1"	18' 3"	15' 11"	22' 6"	20' 5"	17' 10"
800S162-33	33	14' 6" e	12' 7" e	10' 3" e	14' 6" a	11' 9" a	8' 8" a	14' 6" e	12' 7" e	10' 3" e	14' 6" a	11' 9" a	8' 8" a
800S200-33	33	15' 7" e	13' 6" e	11' 0" e	15' 1" a	12' 2" a	8' 11" a	15' 7" e	13' 6" e	11' 0" e	15' 1" a	12' 2" a	8' 11" a
800S162-43	33	17' 6"	15' 2" e	12' 4" e	17' 6" i	15' 2" i	12' 4" i	17' 1"	15' 2" e	12' 4" e	17' 6" i	15' 2" i	12' 4" i
800S200-43	33	18' 8"	16' 2" e	13' 3" e	18' 8" i	16' 2" i	13' 3" a	18' 0"	16' 2" e	13' 3" e	18' 8" i	16' 2" i	13' 3" a
800S250-43	33	19' 2" e	16' 7" e	13' 7" e	19' 2" i	16' 7" i	13' 7" a	18' 9"	16' 7" e	13' 7" e	19' 2" i	16' 7" i	13' 7" a
800S162-54	33	20' 3"	17' 8"	14' 5" e	20' 5" i	17' 8" i	14' 5" i	18' 5"	16' 9"	14' 5" e	20' 5" i	17' 8" i	14' 5" i
800S162-54	50	20' 3"	18' 5"	16' 0"	22' 8" i	20' 3" i	16' 6" i	18' 5"	16' 9"	14' 7"	20' 8"	18' 9" i	16' 4" i
800S200-54	33	21' 3"	19' 4"	15' 11" e	22' 6" i	19' 6" i	15' 11" i	19' 4"	17' 6"	15' 4" e	21' 8" i	19' 6" i	15' 11" i
800S200-54	50	21' 3"	19' 4"	16' 10"	23' 10" i	21' 7" i	17' 8" i	19' 4"	17' 6"	15' 4"	21' 8"	19' 8" i	17' 2" i
800S250-54	33	22' 2"	19' 5"	15' 10" e	22' 5" i	19' 5" i	15' 10" i	20' 2"	18' 3"	15' 10" e	22' 5" i	19' 5" i	15' 10" i
800S250-54	50	22' 2"	20' 2"	17' 7"	24' 11" i	22' 1" i	18' 1" i	20' 2"	18' 3"	16' 0"	22' 7"	20' 6" i	17' 11" i
800S300-54	50	23' 0"	20' 10"	18' 1"	25' 6" i	22' 5" i	18' 4" i	20' 11"	19' 0"	16' 7"	23' 5" i	21' 3" i	18' 4" i
800S162-68	33	21' 9"	19' 9"	16' 10"	23' 9" i	20' 7" i	16' 10" i	19' 9"	18' 0"	15' 8"	22' 3" i	20' 2" i	16' 10" i
800S162-68	50	21' 9"	19' 9"	17' 3"	24' 5"	22' 3"	19' 5" i	19' 9"	18' 0"	15' 8"	22' 3"	20' 2"	17' 8" i
800S200-68	33	22' 10"	20' 9"	18' 1"	25' 7" i	22' 10" i	18' 8" i	20' 9"	18' 10"	16' 5"	23' 3" i	21' 2" i	18' 6" i
800S200-68	50	22' 10"	20' 9"	18' 1"	25' 7"	23' 3"	20' 4" i	20' 9"	18' 10"	16' 5"	23' 3"	21' 2"	18' 6"
800S250-68	33	23' 10"	21' 8"	18' 11"	26' 9" i	23' 4" i	19' 1" i	21' 8"	19' 8"	17' 2"	24' 3" i	22' 1" i	19' 1" i
800S250-68	50	23' 10"	21' 8"	18' 11"	26' 9"	24' 3" i	21' 2" i	21' 8"	19' 8"	17' 2"	24' 3"	22' 1"	19' 3" i
800S300-68	50	24' 9"	22' 6"	19' 7"	27' 9"	25' 2" i	21' 6" i	22' 6"	20' 5"	17' 10"	25' 3"	22' 11"	20' 0" i
800S162-97	33	24' 2"	22' 0"	19' 2"	27' 2"	24' 8"	21' 7" i	22' 0"	20' 0"	17' 5"	24' 8"	22' 5"	19' 7" i
800S162-97	50	24' 2"	22' 0"	19' 2"	27' 2"	24' 8"	21' 7"	22' 0"	20' 0"	17' 5"	24' 8"	22' 5"	19' 7"
800S200-97	33	25' 4"	23' 1"	20' 2"	28' 6"	25' 11"	22' 7" i	23' 1"	20' 11"	18' 4"	25' 11"	23' 6"	20' 6" i
800S200-97	50	25' 4"	23' 1"	20' 2"	28' 6"	25' 11"	22' 7"	23' 1"	20' 11"	18' 4"	25' 11"	23' 6"	20' 6"
800S250-97	33	26' 6"	24' 1"	21' 0"	29' 9"	27' 1"	23' 7" i	24' 1"	21' 11"	19' 1"	27' 1"	24' 7"	21' 6" i
800S250-97	50	26' 6"	24' 1"	21' 0"	29' 9"	27' 1"	23' 7"	24' 1"	21' 11"	19' 1"	27' 1"	24' 7"	21' 6"
800S300-97	50	27' 7"	25' 1"	21' 11"	30' 11"	28' 1"	24' 7"	25' 1"	22' 9"	19' 11"	28' 1"	25' 7"	22' 4"
1000S162-43	33	19' 4" e	16' 9" e	13' 8" e	19' 4" a	16' 9" a	13' 4" a	19' 4" e	16' 9" e	13' 8" e	19' 4" a	16' 9" a	13' 4" a
1000S200-43	33	20' 11" e	18' 1" e	14' 9" e	20' 11" a	18' 1" a	13' 10" a	20' 11" e	18' 1" e	14' 9" e	20' 11" a	18' 1" a	13' 10" a
1000S250-43	33	21' 6" e	18' 7" e	15' 2" e	21' 6" a	18' 7" a	14' 2" a	21' 6" e	18' 7" e	15' 2" e	21' 6" a	18' 7" a	14' 2" a
1000S162-54	33	22' 9"	19' 9"	16' 1" e	22' 9" i	19' 9" i	16' 1" i	22' 0"	19' 9"	16' 1" e	22' 9" i	19' 9" i	16' 1" i
1000S162-54	50	24' 1"	21' 10"	18' 4"	25' 11" i	22' 6" i	18' 4" i	22' 0"	19' 11"	17' 4"	24' 7" i	22' 3" i	18' 4" i
1000S200-54	33	24' 5"	21' 2" e	17' 3" e	24' 5" i	21' 2" i	17' 3" i	23' 0"	20' 10" e	17' 3" e	24' 5" i	21' 2" i	17' 3" i
1000S200-54	50	25' 2"	22' 10"	19' 9"	27' 10" i	24' 2" i	19' 9" i	23' 0"	20' 10"	18' 2"	25' 8" i	23' 3" i	19' 9" i
1000S250-54	33	25' 2"	21' 10" e	17' 10" e	25' 2" i	21' 10" i	17' 10" i	24' 0"	21' 10" e	17' 10" e	25' 2" i	21' 10" i	17' 10" i
1000S250-54	50	26' 5"	24' 0"	20' 3"	28' 8" i	24' 9" i	20' 3" i	24' 0"	21' 10"	19' 1"	27' 0" i	24' 6" i	20' 3" i
1000S300-54	50	27' 4"	24' 9"	20' 7"	29' 1" i	25' 2" i	20' 7" i	24' 10"	22' 7"	19' 8"	27' 10" i	25' 2" i	20' 7" i
1000S162-68	33	26' 2"	23' 2"	18' 11"	26' 9" i	23' 2" i	18' 11" i	23' 9"	21' 7"	18' 10"	26' 8" i	23' 2" i	18' 11" i
1000S162-68	50	26' 2"	23' 9"	20' 8"	29' 3"	26' 6" i	21' 8" i	23' 9"	21' 7"	18' 10"	26' 8"	24' 2"	21' 1" i
1000S200-68	33	27' 4"	24' 9"	20' 3"	28' 7" i	24' 9" i	20' 3" i	24' 10"	22' 7"	19' 8"	27' 10" i	24' 9" i	20' 3" i
1000S200-68	50	27' 4"	24' 10"	21' 7"	30' 7" i	27' 9" i	23' 2" i	24' 10"	22' 7"	19' 8"	27' 10"	25' 3" i	22' 0" i
1000S250-68	33	28' 5"	25' 10"	21' 6" e	30' 5" i	26' 4" i	21' 6" i	25' 10"	23' 5"	20' 6"	29' 0" i	26' 4" i	21' 6" i
1000S250-68	50	28' 5"	25' 10"	22' 7"	31' 11" i	29' 0" i	23' 10" i	25' 10"	23' 5"	20' 6"	29' 0"	26' 4" i	23' 0" i
1000S300-68	50	29' 5"	26' 9"	23' 4"	33' 0" i	29' 8" i	24' 3" i	26' 9"	24' 4"	21' 3"	30' 0"	27' 3" i	23' 9" i
1000S162-97	33	29' 2"	26' 6"	23' 1"	32' 8" i	28' 11" i	23' 8" i	26' 6"	24' 1"	21' 0"	29' 9"	27' 0" i	23' 7" i
1000S162-97	50	29' 2"	26' 6"	23' 1"	32' 8"	29' 9"	26' 0"	26' 6"	24' 1"	21' 0"	29' 9"	27' 0"	23' 7"
1000S200-97	33	30' 5"	27' 8"	24' 2"	34' 2" i	30' 11" i	25' 3" i	27' 8"	25' 1"	21' 11"	31' 0"	28' 2" i	24' 8" i
1000S200-97	50	30' 5"	27' 8"	24' 2"	34' 2"	31' 0"	27' 1"	27' 8"	25' 1"	21' 11"	31' 0"	28' 2"	24' 8"
1000S250-97	33	31' 8"	28' 9"	25' 2"	35' 7"	32' 4" i	27' 8" i	28' 9"	26' 2"	22' 10"	32' 4"	29' 4"	25' 8" i
1000S250-97	50	31' 8"	28' 9"	25' 2"	35' 7"	32' 4"	28' 3"	28' 9"	26' 2"	22' 10"	32' 4"	29' 4"	25' 8"
1000S300-97	50	32' 10"	29' 10"	26' 1"	36' 10"	33' 6"	29' 3"	29' 10"	27' 1"	23' 8"	33' 6"	30' 5"	26' 7"
1200S162-54	33	24' 7" e	21' 4" e	17' 5" e	24' 7" a	21' 4" a	17' 5" a	24' 7" e	21' 4" e	17' 5" e	24' 7" a	21' 4" a	17' 5" a
1200S162-54	50	27' 9" e	24' 2" e	19' 9" e	27' 11" a	24' 2" a	19' 9" a	25' 4" e	22' 11" e	19' 9" e	27' 11" a	24' 2" a	19' 9" a
1200S200-54	33	26' 7" e	23' 0" e	18' 10" e	26' 7" a	23' 0" a	18' 10" a	26' 5" e	23' 0" e	18' 10" e	26' 7" a	23' 0" a	18' 10" a
1200S200-54	50	28' 11" e	26' 2" e	21' 4" e	30' 2" a	26' 2" a	21' 4" a	26' 5" e	23' 11" e	20' 10" e	29' 6" a	26' 2" a	21' 4" a
1200S250-54	33	27' 6" e	23' 10" e	19' 5" e	27' 6" a	23' 10" a	19' 5" a	27' 5" e	23' 10" e	19' 5" e	27' 6" a	23' 10" a	19' 5" a
1200S250-54	50	30' 1" e	27' 0" e	22' 1" e	31' 2" a	27' 0" a	21' 6" a	27' 5" e	24' 11" e	21' 8" e	30' 8" a	27' 0" a	21' 6" a
1200S300-54	50	31' 6" e	27' 6" e	22' 6" e	31' 10" a	27' 6" a	21' 10" a	28' 9" e	26' 1" e	22' 6" e	31' 10" a	27' 6" a	21' 10" a
1200S162-68	33	29' 2"	25' 3"	20' 7" e	29' 2" i	25' 3" i	20' 7" i	27' 7"	25' 0"	20' 7" e	29' 2" i	25' 3" i	20' 7" i
1200S162-68	50	30' 3"	27' 5"	23' 6"	33' 2" i	28' 9" i	23' 6" i	27' 7"	25' 0"	21' 9"	30' 10"	27' 11" i	23' 6" i
1200S200-68	33	31' 4"	27' 1"	22' 2" e	31' 4" i	27' 1" i	22' 2" i	28' 9"	26' 1"	22' 2" e	31' 4" i	27' 1" i	22' 2" i
1200S200-68	50	31' 6"	28' 7"	24' 11"	35' 2" i	30' 11" i	25' 3" i	28' 9"	26' 1"	22' 8"	32' 1"	29' 1" i	25' 3" i
1200S250-68	33	32' 5"	28' 1"	22' 11" e	32' 5" i	28' 1" i	22' 11" i	29' 10"	27' 1"	22' 11" e	32' 5" i	28' 1" i	22' 11" i
1200S250-68	50	32' 9"	29' 8"	25' 10"	36' 7" i	31' 11" i	26' 1" i	29' 10"	27' 1"	23' 7"	33' 4" i	30' 3" i	26' 1" i
1200S300-68	50	34' 0"	30' 11"	26' 7"	37' 7" i	32' 7" i	26' 7" i	30' 11"	28' 1"	24' 6"	34' 8" i	31' 6" i	26' 7" i
1200S162-97	33	34' 0"	30' 11"	26' 5"	37' 5" i	32' 5" i	26' 5" i	30' 11"	28' 1"	24' 6"	34' 8" i	31' 6" i	26' 5" i
1200S162-97	50	34' 0"	30' 11"	27' 0"	38' 2"	34' 8"	30' 3" i	30' 11"	28' 1"	24' 6"	34' 8"	31' 6"	27' 6"
1200S200-97	33	35' 5"	32' 2"	28' 1"	39' 9" i	34' 6" i	28' 2" i	32' 2"	29' 3"	25' 6"	36' 1"	32' 10" i	28' 2" i
1200S200-97	50	35' 5"	32' 2"	28' 1"	39' 9"	36' 1"	31' 6" i	32' 2"	29' 3"	25' 6"	36' 1"	32' 10"	28' 8"
1200S250-97	33	36' 9"	33' 4"	29' 2"	41' 3" i	35' 10" i	29' 3" i	33' 4"	30' 4"	26' 6"	37' 6"	34' 1" i	29' 3" i
1200S250-97	50	36' 9"	33' 4"	29' 2"	41' 3"	37' 6"	32' 9" i	33' 4"	30' 4"	26' 6"	37' 6"	34' 1"	29' 9"
1200S300-97	50	38' 0"	34' 6"	30' 2"	42' 8"	38' 9"	33' 10" i	34' 6"	31' 4"	27' 5"	38' 9"	35' 2"	30' 9"
1400S162-54	33	26' 1" e	22' 7" e	18' 5" e	26' 1" a	22' 7" a	18' 5" a	26' 1" e	22' 7" e	18' 5" e	26' 1" a	22' 7" a	18' 5" a
1400S162-54	50	29' 6" e	25' 6" e	20' 10" e	29' 6" a	25' 6" a	20' 3" a	28' 6" e	25' 6" e	20' 10" e	29' 6" a	25' 6" a	20' 3" a
1400S200-54	33	28' 4" e	24' 6" e	20' 0" e	28' 4" a	24' 6" a	19' 4" a	28' 4" e	24' 6" e	20' 0" e	28' 4" a	24' 6" a	19' 4" a
1400S200-54	50	32' 1" e	27' 9" e	22' 8" e	32' 1" a	27' 9" a	20' 8" a	29' 8" e	26' 11" e	22' 8" e	32' 1" a	27' 9" a	20' 8" a
1400S250-54	33	29' 6" e	25' 6" e	20' 10" e	29' 6" a	25' 6" a	19' 6" a	29' 6" e	25' 6" e	20' 10" e	29' 6" a	25' 6" a	19' 6" a
1400S250-54	50	33' 4" e	28' 10" e	23' 7" e	33' 4" a	28' 2" a	20' 10" a	30' 10" e	27' 11" e	23' 7" e	33' 4" a	28' 2" a	20' 10" a
1400S300-54	50	34' 1" e	29' 7" e	24' 1" e	34' 1" a	28' 4" a	20' 11" a	31' 10" e	28' 9" e	24' 1" e	34' 1" a	28' 4" a	20' 11" a
1400S162-68	33	31' 1"	26' 11"	22' 0" e	31' 1" i	26' 11" i	22' 0" i	31' 1"	26' 11"	22' 0" e	31' 1" i	26' 11" i	22' 0" i
1400S162-68	50	34' 1"	30' 6"	24' 11"	35' 3" i	30' 6" i	24' 11" i	31' 2"	28' 3"	24' 7"	34' 9" i	30' 6" i	24' 11" i
1400S200-68	33	33' 6"	29' 1"	23' 9" e	33' 6" i	29' 1" i	23' 9" i	32' 5"	29' 1"	23' 9" e	33' 6" i	29' 1" i	23' 9" i
1400S200-68	50	35' 6"	32' 2"	26' 11"	38' 1" i	33' 0" i	26' 11" i	32' 5"	29' 4"	25' 7"	36' 2" i	32' 9" i	26' 11" i
1400S250-68	33	34' 10"	30' 2" e	24' 8" e	34' 10" i	30' 2" i	24' 8" i	33' 7"	30' 2" e	24' 8" e	34' 10" i	30' 2" i	24' 8" i
1400S250-68	50	36' 10"	33' 4"	27' 11"	39' 6" i	34' 3" i	27' 11" i	33' 7"	30' 6"	26' 6"	37' 6" i	34' 0" i	27' 11" i
1400S300-68	50	38' 1"	34' 5"	28' 7"	40' 6" i	35' 1" i	28' 7" i	34' 8"	31' 6"	27' 5"	38' 9" i	35' 0" i	28' 7" i
1400S162-97	33	38' 10"	34' 11"	28' 6"	40' 4" i	34' 11" i	28' 6" i	35' 3"	32' 0"	28' 0"	39' 7" i	34' 11" i	28' 6" i
1400S162-97	50	38' 10"	35' 3"	30' 8"	43' 5"	39' 4" i	32' 8" i	35' 3"	32' 0"	28' 0"	39' 7"	35' 11"	31' 3" i
1400S200-97	33	40' 3"	36' 7"	30' 6"	43' 2" i	37' 5" i	30' 6" i	36' 7"	33' 3"	29' 1"	41' 1" i	37' 4" i	30' 6" i
1400S200-97	50	40' 3"	36' 7"	31' 11"	45' 2"	40' 11"	35' 0" i	36' 7"	33' 3"	29' 1"	41' 1"	37' 4"	32' 6" i
1400S250-97	33	41' 8"	37' 11"	31' 8"	44' 10" i	38' 10" i	31' 8" i	37' 11"	34' 5"	30' 1"	42' 6" i	38' 8" i	31' 8" i
1400S250-97	50	41' 8"	37' 11"	33' 1"	46' 9"	42' 5" i	36' 3" i	37' 11"	34' 5"	30' 1"	42' 6"	38' 8"	33' 8" i
1400S300-97	50	43' 0"	39' 1"	34' 2"	48' 3"	43' 10" i	37' 2" i	39' 1"	35' 6"	31' 0"	43' 11"	39' 11"	34' 9" i

FLOOR JOIST SPAN TABLES

10 PSF DEAD LOAD AND 30 PSF LIVE LOAD

		L/360 Live Load Deflection						L/480 Live Load Deflection					
Section	Fy(ksi)	Single Span Spacing (in) 16			Two Equal Spans Spacing (in)			Single Span Spacing (in)			Two Equal Spans Spacing (in)		
600S162-33	33	11' 3" e	9' 9" e	7' 11" e	11' 3" i	9' 9" a	7' 11" a	11' 3" e	9' 9" e	7' 11" e	11' 3" i	9' 9" a	7' 11" a
600S200-33	33	12' 0" e	10' 4" e	8' 6" e	12' 0" i	10' 4" a	8' 3" a	11' 11" e	10' 4" e	8' 6" e	12' 0" i	10' 4" a	8' 3" a
600S162-43	33	13' 8"	12' 0" e	9' 10" e	13' 11" i	12' 0" i	9' 10" i	12' 5"	11' 3"	9' 10" e	13' 11" i	12' 0" i	9' 10" i
600S200-43	33	14' 4"	12' 5" e	10' 2" e	14' 4" i	12' 5" i	10' 2" i	13' 0"	11' 10"	10' 2" e	14' 4" i	12' 5" i	10' 2" i
600S250-43	33	14' 8"	12' 9" e	10' 5" e	14' 8" i	12' 9" i	10' 5" i	13' 7"	12' 4" e	10' 5" e	14' 8" i	12' 9" i	10' 5" i
600S162-54	33	14' 7"	13' 3"	11' 6"	16' 3" i	14' 1" i	11' 6" i	13' 3"	12' 1"	10' 7"	14' 11" i	13' 7" i	11' 6" i
600S162-54	50	14' 7"	13' 3"	11' 7"	16' 5"	14' 11" i	13' 0" i	13' 3"	12' 1"	10' 7"	14' 11"	13' 7"	11' 10" i
600S200-54	33	15' 4"	14' 0"	12' 2" e	17' 2" i	14' 10" i	12' 2" i	14' 0"	12' 8"	11' 1"	15' 8" i	14' 3" i	12' 2" i
600S200-54	50	15' 4"	14' 0"	12' 2"	17' 3"	15' 8" i	13' 6" i	14' 0"	12' 8"	11' 1"	15' 8"	14' 3"	12' 5" i
600S250-54	33	16' 1"	14' 8"	12' 1" e	17' 1" i	14' 10" i	12' 1" i	14' 8"	13' 3"	11' 7"	16' 5" i	14' 10" i	12' 1" i
600S250-54	50	16' 1"	14' 8"	12' 9"	18' 1" i	16' 5" i	13' 10" i	14' 8"	13' 3"	11' 7"	16' 5"	14' 11" i	13' 0" i
600S300-54	50	16' 9"	15' 2"	13' 2"	18' 8" i	16' 10" i	14' 1" i	15' 3"	13' 10"	12' 1"	17' 1"	15' 6" i	13' 5" i
600S162-68	33	15' 8"	14' 3"	12' 5"	17' 7" i	16' 0" i	13' 4" i	14' 3"	12' 11"	11' 4"	16' 0"	14' 6" i	12' 8" i
600S162-68	50	15' 8"	14' 3"	12' 5"	17' 7"	16' 0"	14' 0" i	14' 3"	12' 11"	11' 4"	16' 0"	14' 6"	12' 8"
600S200-68	33	16' 6"	15' 0"	13' 1"	18' 6" i	16' 10" i	14' 2" i	15' 0"	13' 7"	11' 11"	16' 10"	15' 3" i	13' 4" i
600S200-68	50	16' 6"	15' 0"	13' 1"	18' 6"	16' 10"	14' 8" i	15' 0"	13' 7"	11' 11"	16' 10"	15' 3"	13' 4"
600S250-68	33	17' 3"	15' 8"	13' 9"	19' 5" i	17' 8" i	14' 6" i	15' 8"	14' 3"	12' 6"	17' 8"	16' 0" i	14' 0" i
600S250-68	50	17' 3"	15' 8"	13' 9"	19' 5"	17' 8"	15' 5" i	15' 8"	14' 3"	12' 6"	17' 8"	16' 0"	14' 0" i
600S300-68	50	18' 0"	16' 4"	14' 4"	20' 3"	18' 4"	15' 11" i	16' 4"	14' 10"	13' 0"	18' 5"	16' 8"	14' 7" i
600S162-97	33	17' 4"	15' 9"	13' 9"	19' 6"	17' 9"	15' 6" i	15' 9"	14' 4"	12' 6"	17' 9"	16' 1"	14' 1"
600S162-97	50	17' 4"	15' 9"	13' 9"	19' 6"	17' 9"	15' 6"	15' 9"	14' 4"	12' 6"	17' 9"	16' 1"	14' 1"
600S200-97	33	18' 4"	16' 8"	14' 6"	20' 7"	18' 8"	16' 4" i	16' 8"	15' 1"	13' 2"	18' 8"	17' 0"	14' 10"
600S200-97	50	18' 4"	16' 8"	14' 6"	20' 7"	18' 8"	16' 4"	16' 8"	15' 1"	13' 2"	18' 8"	17' 0"	14' 10"
600S250-97	33	19' 3"	17' 6"	15' 3"	21' 7"	19' 7"	17' 2" i	17' 6"	15' 10"	13' 10"	19' 7"	17' 10"	15' 7"
600S250-97	50	19' 3"	17' 6"	15' 3"	21' 7"	19' 7"	17' 2"	17' 6"	15' 10"	13' 10"	19' 7"	17' 10"	15' 7"
600S300-97	50	20' 1"	18' 3"	15' 11"	22' 6"	20' 5"	17' 10"	18' 3"	16' 7"	14' 6"	20' 5"	18' 7"	16' 3"
800S162-33	33	13' 0" e	11' 3" e	9' 2" e	12' 4" a	10' 0" a	7' 3" a	13' 0" e	11' 3" e	9' 2" e	12' 4" a	10' 0" a	7' 3" a
800S200-33	33	13' 11" e	12' 1" e	9' 6" e	12' 9" a	10' 4" a	7' 6" a	13' 11" e	12' 1" e	9' 6" e	12' 9" a	10' 4" a	7' 6" a
800S162-43	33	15' 8" e	13' 6" e	11' 1" e	15' 8" i	13' 6" i	11' 1" a	15' 6" e	13' 6" e	11' 1" e	15' 8" i	13' 6" i	11' 1" a
800S200-43	33	16' 9" e	14' 6" e	11' 10" e	16' 9" i	14' 6" i	11' 10" a	16' 4" e	14' 6" e	11' 10" e	16' 9" i	14' 6" i	11' 10" a
800S250-43	33	17' 2" e	14' 10" e	12' 2" e	17' 2" i	14' 10" i	12' 2" a	17' 0" e	14' 10" e	12' 2" e	17' 2" i	14' 10" i	12' 2" a
800S162-54	33	18' 3"	15' 10"	12' 11" e	18' 3" i	15' 10" i	12' 11" i	16' 9"	15' 3"	12' 11" e	18' 3" i	15' 10" i	12' 11" i
800S162-54	50	18' 5"	16' 8"	14' 7"	20' 7" i	18' 1" i	14' 9" i	16' 9"	15' 3"	13' 3"	18' 9" i	17' 0" i	14' 9" i
800S200-54	33	19' 4"	17' 5" e	14' 3" e	20' 1" i	17' 5" i	14' 3" i	17' 6"	15' 11"	13' 11" e	19' 8" i	17' 5" i	14' 3" i
800S200-54	50	19' 4"	17' 6"	15' 4"	21' 8" i	19' 4" i	15' 9" i	17' 6"	15' 11"	13' 11"	19' 8" i	17' 11" i	15' 7" i
800S250-54	33	20' 0"	17' 4" e	14' 2" e	20' 0" i	17' 4" i	14' 2" i	18' 3"	16' 7"	14' 2" e	20' 0" i	17' 4" i	14' 2" i
800S250-54	50	20' 2"	18' 3"	16' 0"	22' 7" i	19' 9" i	16' 2" i	18' 3"	16' 7"	14' 6"	20' 6" i	18' 8" i	16' 2" i
800S300-54	50	20' 10"	18' 11"	16' 4"	23' 2" i	20' 1" i	16' 5" i	19' 0"	17' 3"	15' 0"	21' 3" i	19' 3" i	16' 5" i
800S162-68	33	19' 9"	18' 0"	15' 0"	21' 3" i	18' 5" i	15' 0" i	18' 0"	16' 4"	14' 3"	20' 2" i	18' 4" i	15' 0" i
800S162-68	50	19' 9"	18' 0"	15' 8"	22' 3"	20' 2" i	17' 4" i	18' 0"	16' 4"	14' 3"	20' 2"	18' 4"	16' 0" i
800S200-68	33	20' 9"	18' 10"	16' 5"	23' 3" i	20' 5" i	16' 8" i	18' 10"	17' 1"	14' 11"	21' 2" i	19' 2" i	16' 8" i
800S200-68	50	20' 9"	18' 10"	16' 5"	23' 3"	21' 2" i	18' 6" i	18' 10"	17' 1"	14' 11"	21' 2"	19' 2"	16' 9" i
800S250-68	33	21' 8"	19' 8"	17' 1"	24' 1" i	20' 11" i	17' 1" i	19' 8"	17' 10"	15' 7"	22' 1" i	20' 1" i	17' 1" i
800S250-68	50	21' 8"	19' 8"	17' 2"	24' 3"	22' 1" i	18' 11" i	19' 8"	17' 10"	15' 7"	22' 1"	20' 1"	17' 5" i
800S300-68	50	22' 6"	20' 5"	17' 10"	25' 2"	22' 10" i	19' 3" i	20' 5"	18' 7"	16' 2"	22' 11"	20' 10"	18' 2" i
800S162-97	33	22' 0"	20' 0"	17' 5"	24' 8"	22' 5" i	19' 7" i	20' 0"	18' 2"	15' 10"	22' 5"	20' 4"	17' 10" i
800S162-97	50	22' 0"	20' 0"	17' 5"	24' 8"	22' 5"	19' 7"	20' 0"	18' 2"	15' 10"	22' 5"	20' 4"	17' 10"
800S200-97	33	23' 1"	20' 11"	18' 4"	25' 11"	23' 6" i	20' 6" i	20' 11"	19' 0"	16' 7"	23' 6"	21' 4"	18' 8" i
800S200-97	50	23' 1"	20' 11"	18' 4"	25' 11"	23' 6"	20' 6"	20' 11"	19' 0"	16' 7"	23' 6"	21' 4"	18' 8"
800S250-97	33	24' 1"	21' 11"	19' 1"	27' 1"	24' 7" i	21' 6" i	21' 11"	19' 11"	17' 4"	24' 7"	22' 4"	19' 6" i
800S250-97	50	24' 1"	21' 11"	19' 1"	27' 1"	24' 7"	21' 6"	21' 11"	19' 11"	17' 4"	24' 7"	22' 4"	19' 6"
800S300-97	50	25' 1"	22' 9"	19' 11"	28' 1"	25' 7"	22' 4"	22' 9"	20' 8"	18' 1"	25' 7"	23' 3"	20' 3"
1000S162-43	33	17' 4" e	15' 0" e	12' 3" e	17' 4" a	15' 0" a	11' 4" a	17' 4" e	15' 0" e	12' 3" e	17' 4" a	15' 0" a	11' 4" a
1000S200-43	33	18' 8" e	16' 2" e	13' 2" e	18' 8" a	15' 9" a	11' 8" a	18' 8" e	16' 2" e	13' 2" e	18' 8" a	15' 9" a	11' 8" a
1000S250-43	33	19' 3" e	16' 8" e	13' 7" e	19' 3" a	16' 2" a	12' 0" a	19' 3" e	16' 8" e	13' 7" e	19' 3" a	16' 2" a	12' 0" a
1000S162-54	33	20' 4"	17' 8" e	14' 5" e	20' 4" i	17' 8" i	14' 5" i	20' 0"	17' 8" e	14' 5" e	20' 4" i	17' 8" i	14' 5" i
1000S162-54	50	21' 11"	19' 10"	16' 5"	23' 2" i	20' 1" i	16' 5" i	20' 0"	18' 1"	15' 9"	22' 4" i	20' 1" i	16' 5" i
1000S200-54	33	21' 10"	18' 11" e	15' 6" e	21' 10" i	18' 11" i	15' 6" a	20' 10"	18' 11" e	15' 6" e	21' 10" i	18' 11" i	15' 6" a
1000S200-54	50	22' 10"	20' 9"	17' 8" e	24' 11" i	21' 7" i	17' 8" i	20' 10"	18' 11"	16' 6"	23' 4" i	21' 2" i	17' 8" i
1000S250-54	33	22' 6" e	19' 6" e	15' 11" e	22' 6" i	19' 6" i	15' 11" a	21' 10"	19' 6" e	15' 11" e	22' 6" i	19' 6" i	15' 11" a
1000S250-54	50	24' 0"	21' 10"	18' 1" e	25' 7" i	22' 2" i	18' 1" i	21' 10"	19' 10"	17' 4" e	24' 6" i	22' 2" i	18' 1" i
1000S300-54	50	24' 9"	22' 5"	18' 5" e	26' 0" i	22' 6" i	18' 5" i	22' 7"	20' 6"	17' 10" e	25' 3" i	22' 6" i	18' 5" i
1000S162-68	33	23' 9"	20' 9"	16' 11" e	23' 11" i	20' 9" i	16' 11" i	21' 7"	19' 8"	16' 11" e	23' 11" i	20' 9" i	16' 11" i
1000S162-68	50	23' 9"	21' 7"	18' 9"	26' 7" i	23' 9" i	19' 5" i	21' 7"	19' 8"	17' 2"	24' 3"	22' 0" i	19' 2" i
1000S200-68	33	24' 10"	22' 2"	18' 1" e	25' 7" i	22' 2" i	18' 1" i	22' 7"	20' 6"	17' 11" e	25' 4" i	22' 2" i	18' 1" i
1000S200-68	50	24' 10"	22' 6"	19' 8"	27' 9" i	25' 2" i	20' 9" i	22' 7"	20' 6"	17' 11"	25' 4"	22' 11" i	20' 0" i
1000S250-68	33	25' 10"	23' 5"	19' 3" e	27' 3" i	23' 7" i	19' 3" i	23' 5"	21' 4"	18' 7" e	26' 4" i	23' 7" i	19' 3" i
1000S250-68	50	25' 10"	23' 5"	20' 6"	29' 0" i	26' 1" i	21' 4" i	23' 5"	21' 4"	18' 7"	26' 4"	23' 11" i	20' 11" i
1000S300-68	50	26' 9"	24' 4"	21' 2"	29' 11" i	26' 6" i	21' 8" i	24' 4"	22' 1"	19' 3"	27' 3"	24' 9" i	21' 7" i
1000S162-97	33	26' 6"	24' 1"	21' 0"	29' 9" i	25' 11" i	21' 2" i	24' 1"	21' 10"	19' 1"	27' 0"	24' 6" i	21' 2" i
1000S162-97	50	26' 6"	24' 1"	21' 0"	29' 9"	27' 0"	23' 7" i	24' 1"	21' 10"	19' 1"	27' 0"	24' 6"	21' 5"
1000S200-97	33	27' 8"	25' 1"	21' 11"	31' 0" i	27' 8" i	22' 7" i	25' 1"	22' 10"	19' 11"	28' 2"	25' 7" i	22' 5" i
1000S200-97	50	27' 8"	25' 1"	21' 11"	31' 0"	28' 2"	24' 8" i	25' 1"	22' 10"	19' 11"	28' 2"	25' 7"	22' 5"
1000S250-97	33	28' 9"	26' 2"	22' 10"	32' 4" i	29' 4" i	24' 9" i	26' 2"	23' 9"	20' 9"	29' 4"	26' 8" i	23' 4" i
1000S250-97	50	28' 9"	26' 2"	22' 10"	32' 4"	29' 4"	25' 8" i	26' 2"	23' 9"	20' 9"	29' 4"	26' 8"	23' 4"
1000S300-97	50	29' 10"	27' 1"	23' 8"	33' 6"	30' 5"	26' 7" i	27' 1"	24' 8"	21' 6"	30' 5"	27' 8"	24' 2"
1200S162-54	33	22' 0" e	19' 1" e	15' 7" e	22' 0" a	19' 1" a	15' 7" a	22' 0" e	19' 1" e	15' 7" e	22' 0" a	19' 1" a	15' 7" a
1200S162-54	50	25' 0" e	21' 7" e	17' 8" e	25' 0" a	21' 7" a	17' 8" a	23' 0" e	20' 10" e	17' 8" e	25' 0" a	21' 7" a	17' 8" a
1200S200-54	33	23' 10" e	20' 7" e	16' 10" e	23' 10" a	20' 7" a	16' 10" a	23' 10" e	20' 7" e	16' 10" e	23' 10" a	20' 7" a	16' 10" a
1200S200-54	50	26' 3" e	23' 5" e	19' 1" e	27' 0" a	23' 5" a	18' 2" a	24' 0" e	21' 9" e	18' 11" e	26' 9" a	23' 5" a	18' 2" a
1200S250-54	33	24' 7" e	21' 4" e	17' 5" e	24' 7" a	21' 4" a	17' 0" a	24' 7" e	21' 4" e	17' 5" e	24' 7" a	21' 4" a	17' 0" a
1200S250-54	50	27' 4" e	24' 2" e	19' 9" e	27' 11" a	24' 2" a	18' 4" a	24' 11" e	22' 7" e	19' 8" e	27' 10" a	24' 2" a	18' 4" a
1200S300-54	50	28' 5" e	24' 8" e	20' 1" e	28' 5" a	24' 8" a	18' 7" a	26' 1" e	23' 8" e	20' 1" e	28' 5" a	24' 8" a	18' 7" a
1200S162-68	33	26' 1"	22' 7"	18' 5" e	26' 1" i	22' 7" i	18' 5" i	25' 1"	22' 7"	18' 5" e	26' 1" i	22' 7" i	18' 5" i
1200S162-68	50	27' 5"	24' 11"	21' 0"	29' 8" i	25' 9" i	21' 0" i	25' 1"	22' 9"	19' 9"	28' 0" i	25' 4" i	21' 0" i
1200S200-68	33	28' 0"	24' 3"	19' 10" e	28' 0" i	24' 3" i	19' 10" i	26' 1"	23' 8"	19' 10" e	28' 0" i	24' 3" i	19' 10" i
1200S200-68	50	28' 7"	25' 11"	22' 7"	31' 11" i	27' 8" i	22' 7" i	26' 1"	23' 8"	20' 7"	29' 2" i	26' 5" i	22' 7" i
1200S250-68	33	29' 0"	25' 1" e	20' 6" e	29' 0" i	25' 1" i	20' 6" i	27' 1"	24' 7" e	20' 6" e	29' 0" i	25' 1" i	20' 6" i
1200S250-68	50	29' 9"	26' 11"	23' 4"	33' 0" i	28' 7" i	23' 4" i	27' 1"	24' 7"	21' 5"	30' 4" i	27' 6" i	23' 4" i
1200S300-68	50	30' 11"	28' 1"	23' 9"	33' 7" i	29' 1" i	23' 9" i	28' 1"	25' 6"	22' 3"	31' 6" i	28' 7" i	23' 9" i
1200S162-97	33	30' 11"	28' 1"	23' 8"	33' 5" i	28' 11" i	23' 8" i	28' 1"	25' 6"	22' 3"	31' 6" i	28' 8" i	23' 8" i
1200S162-97	50	30' 11"	28' 1"	24' 6"	34' 8"	31' 6"	27' 3" i	28' 1"	25' 6"	22' 3"	31' 6"	28' 8"	25' 0" i
1200S200-97	33	32' 2"	29' 3"	25' 3"	35' 8" i	30' 11" i	25' 3" i	29' 3"	26' 6"	23' 2"	32' 10" i	29' 10" i	25' 3" i
1200S200-97	50	32' 2"	29' 3"	25' 6"	36' 1"	32' 10"	28' 8" i	29' 3"	26' 6"	23' 2"	32' 10"	29' 10"	26' 0" i
1200S250-97	33	33' 4"	30' 4"	26' 2"	37' 0" i	32' 0" i	26' 2" i	30' 4"	27' 7"	24' 1"	34' 1" i	30' 11" i	26' 2" i
1200S250-97	50	33' 4"	30' 4"	26' 6"	37' 6"	34' 1"	29' 9" i	30' 4"	27' 7"	24' 1"	34' 1"	30' 11"	27' 0" i
1200S300-97	50	34' 6"	31' 4"	27' 5"	38' 9"	35' 2"	30' 8" i	31' 4"	28' 6"	24' 11"	35' 2"	32' 0"	27' 11" i
1400S162-54	33	23' 4" e	20' 3" e	16' 6" e	23' 4" a	20' 3" a	15' 10" a	23' 4" e	20' 3" e	16' 6" e	23' 4" a	20' 3" a	15' 10" a
1400S162-54	50	26' 4" e	22' 10" e	18' 8" e	26' 4" a	22' 10" a	17' 1" a	25' 10" e	22' 10" e	18' 8" e	26' 4" a	22' 10" a	17' 1" a
1400S200-54	33	25' 4" e	21' 11" e	17' 11" e	25' 4" a	21' 11" a	16' 5" a	25' 4" e	21' 11" e	17' 11" e	25' 4" a	21' 11" a	16' 5" a
1400S200-54	50	28' 8" e	24' 10" e	20' 3" e	28' 8" a	23' 8" a	17' 5" a	26' 11" e	24' 5" e	20' 3" e	28' 8" a	23' 8" a	17' 5" a
1400S250-54	33	26' 4" e	22' 10" e	18' 8" e	26' 4" a	22' 3" a	16' 6" a	26' 4" e	22' 10" e	18' 8" e	26' 4" a	22' 3" a	16' 6" a
1400S250-54	50	29' 10" e	25' 10" e	21' 1" e	29' 6" a	23' 11" a	17' 7" a	28' 0" e	25' 4" e	21' 1" e	29' 6" a	23' 11" a	17' 7" a
1400S300-54	50	30' 6" e	26' 5" e	21' 7" e	29' 8" a	24' 0" a	17' 8" a	28' 10" e	26' 1" e	21' 7" e	29' 8" a	24' 0" a	17' 8" a
1400S162-68	33	27' 10"	24' 1" e	19' 8" e	27' 10" i	24' 1" i	19' 8" i	27' 10"	24' 1" e	19' 8" e	27' 10" i	24' 1" i	19' 8" i
1400S162-68	50	30' 11"	27' 4"	22' 4"	31' 6" i	27' 4" i	22' 4" i	28' 3"	25' 8"	22' 3"	31' 6" i	27' 4" i	22' 4" i
1400S200-68	33	30' 0"	26' 0" e	21' 3" e	30' 0" i	26' 0" i	21' 3" a	29' 5"	26' 0" e	21' 3" e	30' 0" i	26' 0" i	21' 3" a
1400S200-68	50	32' 3"	29' 2"	24' 1" e	34' 1" i	29' 6" i	24' 1" i	29' 5"	26' 8"	23' 2"	32' 10" i	29' 6" i	24' 1" i
1400S250-68	33	31' 2"	27' 0" e	22' 0" e	31' 2" i	27' 0" i	22' 0" a	30' 6"	27' 0" e	22' 0" e	31' 2" i	27' 0" i	22' 0" a
1400S250-68	50	33' 5"	30' 4"	25' 0" e	35' 4" i	30' 7" i	25' 0" i	30' 6"	27' 8"	24' 1" e	34' 1" i	30' 7" i	25' 0" i
1400S300-68	50	34' 6"	31' 2"	25' 7" e	36' 2" i	31' 4" i	25' 7" i	31' 6"	28' 7"	24' 10" e	35' 2" i	31' 4" i	25' 7" i
1400S162-97	33	35' 3"	31' 3"	25' 6"	36' 1" i	31' 3" i	25' 6" i	32' 0"	29' 1"	25' 5"	36' 0" i	31' 3" i	25' 6" i
1400S162-97	50	35' 3"	32' 0"	27' 10"	39' 5"	35' 9" i	29' 2" i	32' 0"	29' 1"	25' 5"	36' 0"	32' 7"	28' 5" i
1400S200-97	33	36' 7"	33' 3"	27' 4"	38' 7" i	33' 5" i	27' 4" i	33' 3"	30' 2"	26' 5"	37' 4" i	33' 5" i	27' 4" i
1400S200-97	50	36' 7"	33' 3"	29' 0"	41' 0"	37' 2" i	31' 4" i	33' 3"	30' 2"	26' 5"	37' 4"	33' 11"	29' 6" i
1400S250-97	33	37' 11"	34' 5"	28' 4"	40' 1" i	34' 9" i	28' 4" i	34' 5"	31' 3"	27' 4"	38' 8" i	34' 9" i	28' 4" i
1400S250-97	50	37' 11"	34' 5"	30' 0"	42' 5"	38' 6" i	32' 5" i	34' 5"	31' 3"	27' 4"	38' 8"	35' 1"	30' 7" i
1400S300-97	50	39' 1"	35' 6"	31' 0"	43' 10"	39' 9" i	33' 3" i	35' 6"	32' 3"	28' 2"	39' 11"	36' 3"	31' 7" i

FLOOR JOIST SPAN TABLES

10 PSF DEAD LOAD AND 40 PSF LIVE LOAD

		L/360 Live Load Deflection						L/480 Live Load Deflection					
Section	Fy(ksi)	Single Span Spacing (in) 16			Two Equal Spans Spacing (in)			Single Span Spacing (in)			Two Equal Spans Spacing (in)		
600S162-33	33	10' 3" e	8' 11" e	7' 3" e	10' 3" i	8' 11" a	7' 1" a	10' 3" e	8' 11" e	7' 3" e	10' 3" i	8' 11" a	7' 1" a
600S200-33	33	10' 11" e	9' 6" e	7' 9" e	10' 11" a	9' 6" a	7' 2" a	10' 11" e	9' 6" e	7' 9" e	10' 11" a	9' 6" a	7' 2" a
600S162-43	33	12' 8"	11' 0" e	9' 0" e	12' 8" i	11' 0" i	9' 0" a	11' 6"	10' 5" e	9' 0" e	12' 8" i	11' 0" i	9' 0" a
600S200-43	33	13' 1"	11' 4" e	9' 3" e	13' 1" i	11' 4" i	9' 3" a	12' 1"	11' 0" e	9' 3" e	13' 1" i	11' 4" i	9' 3" a
600S250-43	33	13' 5" e	11' 7" e	9' 6" e	13' 5" i	11' 7" i	9' 6" a	12' 8"	11' 6" e	9' 6" e	13' 5" i	11' 7" i	9' 6" a
600S162-54	33	13' 7"	12' 4"	10' 6" e	14' 10" i	12' 10" i	10' 6" i	12' 4"	11' 2"	9' 9"	13' 10" i	12' 7" i	10' 6" i
600S162-54	50	13' 7"	12' 4"	10' 9"	15' 3"	13' 10" i	12' 0" i	12' 4"	11' 2"	9' 9"	13' 10"	12' 7" i	11' 0" i
600S200-54	33	14' 3"	13' 0"	11' 1" e	15' 8" i	13' 7" i	11' 1" i	13' 0"	11' 9"	10' 3" e	14' 7" i	13' 3" i	11' 1" i
600S200-54	50	14' 3"	13' 0"	11' 4"	16' 0" i	14' 7" i	12' 4" i	13' 0"	11' 9"	10' 3"	14' 7"	13' 3" i	11' 7" i
600S250-54	33	14' 11"	13' 6"	11' 0" e	15' 7" i	13' 6" i	11' 0" i	13' 7"	12' 4"	10' 9" e	15' 3" i	13' 6" i	11' 0" i
600S250-54	50	14' 11"	13' 7"	11' 10"	16' 9" i	15' 3" i	12' 8" i	13' 7"	12' 4"	10' 9"	15' 3"	13' 10" i	12' 1" i
600S300-54	50	15' 7"	14' 1"	12' 3"	17' 3" i	15' 7" i	12' 10" i	14' 2"	12' 10"	11' 2"	15' 10" i	14' 4" i	12' 5" i
600S162-68	33	14' 7"	13' 3"	11' 7"	16' 4" i	14' 10" i	12' 2" i	13' 3"	12' 0"	10' 6"	14' 10" i	13' 6" i	11' 9" i
600S162-68	50	14' 7"	13' 3"	11' 7"	16' 4"	14' 10"	13' 0" i	13' 3"	12' 0"	10' 6"	14' 10"	13' 6"	11' 9"
600S200-68	33	15' 4"	13' 11"	12' 2"	17' 2" i	15' 7" i	12' 11" i	13' 11"	12' 8"	11' 0"	15' 7" i	14' 2" i	12' 5" i
600S200-68	50	15' 4"	13' 11"	12' 2"	17' 2"	15' 7"	13' 8" i	13' 11"	12' 8"	11' 0"	15' 7"	14' 2"	12' 5"
600S250-68	33	16' 1"	14' 7"	12' 9"	18' 0" i	16' 2" i	13' 3" i	14' 7"	13' 3"	11' 7"	16' 4" i	14' 10" i	13' 0" i
600S250-68	50	16' 1"	14' 7"	12' 9"	18' 0"	16' 4" i	14' 4" i	14' 7"	13' 3"	11' 7"	16' 4"	14' 10"	13' 0" i
600S300-68	50	16' 9"	15' 2"	13' 3"	18' 9"	17' 0" i	14' 10" i	15' 2"	13' 10"	12' 1"	17' 1"	15' 6"	13' 6" i
600S162-97	33	16' 2"	14' 8"	12' 10"	18' 1"	16' 5"	14' 4" i	14' 8"	13' 4"	11' 8"	16' 5"	14' 11"	13' 1" i
600S162-97	50	16' 2"	14' 8"	12' 10"	18' 1"	16' 5"	14' 4"	14' 8"	13' 4"	11' 8"	16' 5"	14' 11"	13' 1"
600S200-97	33	17' 0"	15' 5"	13' 6"	19' 1"	17' 4"	15' 2" i	15' 5"	14' 0"	12' 3"	17' 4"	15' 9"	13' 9" i
600S200-97	50	17' 0"	15' 5"	13' 6"	19' 1"	17' 4"	15' 2"	15' 5"	14' 0"	12' 3"	17' 4"	15' 9"	13' 9"
600S250-97	33	17' 10"	16' 3"	14' 2"	20' 0"	18' 2"	15' 11" i	16' 3"	14' 9"	12' 10"	18' 2"	16' 6"	14' 5" i
600S250-97	50	17' 10"	16' 3"	14' 2"	20' 0"	18' 2"	15' 11"	16' 3"	14' 9"	12' 10"	18' 2"	16' 6"	14' 5"
600S300-97	50	18' 7"	16' 11"	14' 9"	20' 11"	19' 0"	16' 7"	16' 11"	15' 4"	13' 5"	19' 0"	17' 3"	15' 1"
800S162-33	33	11' 10" e	10' 3" e	7' 11" e	10' 9" a	8' 8" a	6' 3" a	11' 10" e	10' 3" e	7' 11" e	10' 9" a	8' 8" a	6' 3" a
800S200-33	33	12' 8" e	11' 0" e	7' 11" e	11' 2" a	8' 11" a	6' 4" a	12' 8" e	11' 0" e	7' 11" e	11' 2" a	8' 11" a	6' 4" a
800S162-43	33	14' 3" e	12' 4" e	10' 1" e	14' 3" i	12' 4" i	10' 1" a	14' 3" e	12' 4" e	10' 1" e	14' 3" i	12' 4" i	10' 1" a
800S200-43	33	15' 3" e	13' 3" e	10' 10" e	15' 3" i	13' 3" a	10' 10" a	15' 2" e	13' 3" e	10' 10" e	15' 3" i	13' 3" a	10' 10" a
800S250-43	33	15' 8" e	13' 7" e	11' 1" e	15' 8" i	13' 7" a	11' 1" a	15' 8" e	13' 7" e	11' 1" e	15' 8" i	13' 7" a	11' 1" a
800S162-54	33	16' 8"	14' 5" e	11' 9" e	16' 8" i	14' 5" i	11' 9" i	15' 7"	14' 1"	11' 9" e	16' 8" i	14' 5" i	11' 9" i
800S162-54	50	17' 1"	15' 6"	13' 6"	19' 1" i	16' 6" i	13' 6" i	15' 7"	14' 1"	12' 4"	17' 5" i	15' 10" i	13' 6" i
800S200-54	33	17' 11"	15' 11" e	13' 0" e	18' 4" i	15' 11" i	13' 0" a	16' 3"	14' 9" e	12' 11" e	18' 3" i	15' 11" i	13' 0" a
800S200-54	50	17' 11"	16' 3"	14' 3"	20' 1" i	17' 8" i	14' 5" i	16' 3"	14' 9"	12' 11"	18' 3" i	16' 7" i	14' 5" i
800S250-54	33	18' 3"	15' 10" e	12' 11" e	18' 3" i	15' 10" i	12' 11" a	17' 0"	15' 5" e	12' 11" e	18' 3" i	15' 10" i	12' 11" a
800S250-54	50	18' 8"	17' 0"	14' 9" e	20' 10" i	18' 1" i	14' 9" i	17' 0"	15' 5"	13' 6"	19' 1" i	17' 4" i	14' 9" i
800S300-54	50	19' 4"	17' 6"	14' 11" e	21' 2" i	18' 4" i	14' 11" i	17' 8"	16' 0"	13' 11"	19' 9" i	17' 10" i	14' 11" i
800S162-68	33	18' 4"	16' 8"	13' 9"	19' 5" i	16' 10" i	13' 9" i	16' 8"	15' 2"	13' 3"	18' 9" i	16' 10" i	13' 9" i
800S162-68	50	18' 4"	16' 8"	14' 7"	20' 7" i	18' 9" i	15' 10" i	16' 8"	15' 2"	13' 3"	18' 9"	17' 0"	14' 10" i
800S200-68	33	19' 3"	17' 6"	15' 3" e	21' 7" i	18' 8" i	15' 3" i	17' 6"	15' 11"	13' 10"	19' 7" i	17' 10" i	15' 3" i
800S200-68	50	19' 3"	17' 6"	15' 3"	21' 7"	19' 7" i	17' 2" i	17' 6"	15' 11"	13' 10"	19' 7"	17' 10"	15' 7" i
800S250-68	33	20' 1"	18' 3"	15' 7" e	22' 0" i	19' 1" i	15' 7" i	18' 3"	16' 7"	14' 6"	20' 6" i	18' 7" i	15' 7" i
800S250-68	50	20' 1"	18' 3"	15' 11"	22' 7" i	20' 6" i	17' 3" i	18' 3"	16' 7"	14' 6"	20' 6"	18' 7" i	16' 3" i
800S300-68	50	20' 10"	18' 11"	16' 6"	23' 4" i	21' 2" i	17' 7" i	18' 11"	17' 3"	15' 0"	21' 3"	19' 4" i	16' 10" i
800S162-97	33	20' 5"	18' 6"	16' 2"	22' 11"	20' 10" i	18' 0" i	18' 6"	16' 10"	14' 9"	20' 10"	18' 11"	16' 6" i
800S162-97	50	20' 5"	18' 6"	16' 2"	22' 11"	20' 10"	18' 2"	18' 6"	16' 10"	14' 9"	20' 10"	18' 11"	16' 6"
800S200-97	33	21' 5"	19' 5"	17' 0"	24' 0"	21' 10" i	19' 0" i	19' 5"	17' 8"	15' 5"	21' 10"	19' 10"	17' 4" i
800S200-97	50	21' 5"	19' 5"	17' 0"	24' 0"	21' 10"	19' 1"	19' 5"	17' 8"	15' 5"	21' 10"	19' 10"	17' 4"
800S250-97	33	22' 4"	20' 4"	17' 9"	25' 1"	22' 10" i	19' 10" i	20' 4"	18' 5"	16' 1"	22' 10"	20' 9"	18' 1" i
800S250-97	50	22' 4"	20' 4"	17' 9"	25' 1"	22' 10"	19' 11"	20' 4"	18' 5"	16' 1"	22' 10"	20' 9"	18' 1"
800S300-97	50	23' 3"	21' 1"	18' 5"	26' 1"	23' 9"	20' 9" i	21' 1"	19' 2"	16' 9"	23' 9"	21' 7"	18' 10"
1000S162-43	33	15' 10" e	13' 8" e	11' 2" e	15' 10" a	13' 4" a	9' 11" a	15' 10" e	13' 8" e	11' 2" e	15' 10" a	13' 4" a	9' 11" a
1000S200-43	33	17' 1" e	14' 9" e	12' 1" e	17' 0" a	13' 10" a	10' 2" a	17' 1" e	14' 9" e	12' 1" e	17' 0" a	13' 10" a	10' 2" a
1000S250-43	33	17' 6" e	15' 2" e	12' 5" e	17' 6" a	14' 2" a	10' 5" a	17' 6" e	15' 2" e	12' 5" e	17' 6" a	14' 2" a	10' 5" a
1000S162-54	33	18' 7" e	16' 1" e	13' 2" e	18' 7" i	16' 1" i	13' 2" a	18' 6" e	16' 1" e	13' 2" e	18' 7" i	16' 1" i	13' 2" a
1000S162-54	50	20' 4"	18' 4"	15' 0" e	21' 2" i	18' 4" i	15' 0" i	18' 6"	16' 10"	14' 7" e	20' 8" i	18' 4" i	15' 0" i
1000S200-54	33	20' 0" e	17' 3" e	14' 1" e	20' 0" i	17' 3" i	14' 1" a	19' 4" e	17' 3" e	14' 1" e	20' 0" i	17' 3" i	14' 1" a
1000S200-54	50	21' 3"	19' 3"	16' 1" e	22' 9" i	19' 9" i	16' 1" i	19' 4"	17' 7"	15' 3" e	21' 8" i	19' 7" i	16' 1" i
1000S250-54	33	20' 7" e	17' 10" e	14' 6" e	20' 7" i	17' 10" i	14' 6" a	20' 3" e	17' 10" e	14' 6" e	20' 7" i	17' 10" i	14' 6" a
1000S250-54	50	22' 4"	20' 3"	16' 6" e	23' 4" i	20' 3" i	16' 6" i	20' 3"	18' 5"	16' 1" e	22' 9" i	20' 3" i	16' 6" i
1000S300-54	50	23' 0"	20' 7"	16' 9" e	23' 9" i	20' 7" i	16' 9" i	21' 0"	19' 0"	16' 7" e	23' 5" i	20' 7" i	16' 9" i
1000S162-68	33	21' 10"	18' 11"	15' 5" e	21' 10" i	18' 11" i	15' 5" i	20' 1"	18' 3"	15' 5" e	21' 10" i	18' 11" i	15' 5" i
1000S162-68	50	22' 1"	20' 0"	17' 5"	24' 8" i	21' 8" i	17' 8" i	20' 1"	18' 3"	15' 11"	22' 6" i	20' 5" i	17' 8" i
1000S200-68	33	23' 0"	20' 3"	16' 6" e	23' 4" i	20' 3" i	16' 6" i	20' 11"	19' 0"	16' 6" e	23' 4" i	20' 3" i	16' 6" i
1000S200-68	50	23' 0"	20' 11"	18' 3"	25' 9" i	23' 2" i	18' 11" i	20' 11"	19' 0"	16' 7"	23' 6" i	21' 4" i	18' 7" i
1000S250-68	33	24' 0"	21' 6" e	17' 7" e	24' 10" i	21' 6" i	17' 7" i	21' 9"	19' 9"	17' 3" e	24' 5" i	21' 6" i	17' 7" i
1000S250-68	50	24' 0"	21' 9"	19' 0"	26' 11" i	23' 10" i	19' 5" i	21' 9"	19' 9"	17' 3"	24' 5" i	22' 3" i	19' 5" i
1000S300-68	50	24' 10"	22' 7"	19' 7"	27' 9" i	24' 3" i	19' 9" i	22' 7"	20' 6"	17' 11"	25' 4" i	23' 0" i	19' 9" i
1000S162-97	33	24' 7"	22' 4"	19' 4"	27' 4" i	23' 8" i	19' 4" i	22' 4"	20' 3"	17' 9"	25' 1" i	22' 9" i	19' 4" i
1000S162-97	50	24' 7"	22' 4"	19' 6"	27' 7"	25' 1"	21' 11" i	22' 4"	20' 3"	17' 9"	25' 1"	22' 9"	19' 11"
1000S200-97	33	25' 8"	23' 4"	20' 4"	28' 10" i	25' 3" i	20' 7" i	23' 4"	21' 2"	18' 6"	26' 2" i	23' 9" i	20' 7" i
1000S200-97	50	25' 8"	23' 4"	20' 4"	28' 10"	26' 2"	22' 10" i	23' 4"	21' 2"	18' 6"	26' 2"	23' 9"	20' 9"
1000S250-97	33	26' 9"	24' 3"	21' 2"	30' 0" i	27' 3" i	22' 7" i	24' 3"	22' 1"	19' 3"	27' 3"	24' 9" i	21' 8" i
1000S250-97	50	26' 9"	24' 3"	21' 2"	30' 0"	27' 3"	23' 10" i	24' 3"	22' 1"	19' 3"	27' 3"	24' 9"	21' 8"
1000S300-97	50	27' 8"	25' 2"	22' 0"	31' 1"	28' 3"	24' 8" i	25' 2"	22' 10"	20' 0"	28' 3"	25' 8"	22' 5" i
1200S162-54	33	20' 1" e	17' 5" e	14' 3" e	20' 1" a	17' 5" a	14' 3" a	20' 1" e	17' 5" e	14' 3" e	20' 1" a	17' 5" a	14' 3" a
1200S162-54	50	22' 10" e	19' 9" e	16' 1" e	22' 10" a	19' 9" a	15' 6" a	21' 4" e	19' 4" e	16' 1" e	22' 10" a	19' 9" a	15' 6" a
1200S200-54	33	21' 9" e	18' 10" e	15' 4" e	21' 9" a	18' 10" a	14' 10" a	21' 9" e	18' 10" e	15' 4" e	21' 9" a	18' 10" a	14' 10" a
1200S200-54	50	24' 4" e	21' 4" e	17' 5" e	24' 8" a	21' 4" a	15' 10" a	22' 3" e	20' 2" e	17' 5" e	24' 8" a	21' 4" a	15' 10" a
1200S250-54	33	22' 6" e	19' 5" e	15' 11" e	22' 6" a	19' 5" a	14' 11" a	22' 6" e	19' 5" e	15' 11" e	22' 6" a	19' 5" a	14' 11" a
1200S250-54	50	25' 4" e	22' 1" e	18' 0" e	25' 6" a	21' 6" a	16' 0" a	23' 1" e	21' 0" e	18' 0" e	25' 6" a	21' 6" a	16' 0" a
1200S300-54	50	26' 0" e	22' 6" e	18' 4" e	26' 0" a	21' 10" a	16' 3" a	24' 3" e	21' 11" e	18' 4" e	26' 0" a	21' 10" a	16' 3" a
1200S162-68	33	23' 10"	20' 7" e	16' 10" e	23' 10" i	20' 7" i	16' 10" i	23' 3"	20' 7" e	16' 10" e	23' 10" i	20' 7" i	16' 10" i
1200S162-68	50	25' 6"	23' 1"	19' 2"	27' 1" i	23' 6" i	19' 2" i	23' 3"	21' 1"	18' 4"	25' 11" i	23' 6" i	19' 2" i
1200S200-68	33	25' 7"	22' 2" e	18' 1" e	25' 7" i	22' 2" i	18' 1" i	24' 2"	21' 11" e	18' 1" e	25' 7" i	22' 2" i	18' 1" i
1200S200-68	50	26' 6"	24' 1"	20' 7" e	29' 2" i	25' 3" i	20' 7" i	24' 2"	21' 11"	19' 1"	27' 1" i	24' 6" i	20' 7" i
1200S250-68	33	26' 5"	22' 11" e	18' 8" e	26' 5" i	22' 11" i	18' 8" a	25' 2"	22' 10" e	18' 8" e	26' 5" i	22' 11" i	18' 8" a
1200S250-68	50	27' 7"	25' 0"	21' 3" e	30' 1" i	26' 1" i	21' 3" i	25' 2"	22' 10"	19' 10"	28' 1" i	25' 6" i	21' 3" i
1200S300-68	50	28' 8"	26' 0"	21' 8" e	30' 8" i	26' 7" i	21' 8" i	26' 1"	23' 8"	20' 8" e	29' 3" i	26' 6" i	21' 8" i
1200S162-97	33	28' 8"	26' 1"	21' 7"	30' 6" i	26' 5" i	21' 7" i	26' 1"	23' 8"	20' 8"	29' 3" i	26' 5" i	21' 7" i
1200S162-97	50	28' 8"	26' 1"	22' 9"	32' 2"	29' 3" i	24' 10" i	26' 1"	23' 8"	20' 8"	29' 3"	26' 7"	23' 3" i
1200S200-97	33	29' 10"	27' 1"	23' 0"	32' 7" i	28' 2" i	23' 0" i	27' 1"	24' 8"	21' 6"	30' 5" i	27' 8" i	23' 0" i
1200S200-97	50	29' 10"	27' 1"	23' 8"	33' 6"	30' 5" i	26' 7" i	27' 1"	24' 8"	21' 6"	30' 5"	27' 8"	24' 2" i
1200S250-97	33	31' 0"	28' 2"	23' 10"	33' 9" i	29' 3" i	23' 10" i	28' 2"	25' 7"	22' 4"	31' 7" i	28' 9" i	23' 10" i
1200S250-97	50	31' 0"	28' 2"	24' 7"	34' 9"	31' 7" i	27' 5" i	28' 2"	25' 7"	22' 4"	31' 7"	28' 9"	25' 1" i
1200S300-97	50	32' 0"	29' 1"	25' 5"	36' 0"	32' 8" i	28' 0" i	29' 1"	26' 5"	23' 1"	32' 8"	29' 8"	25' 11" i
1400S162-54	33	21' 4" e	18' 5" e	15' 1" e	21' 4" a	18' 5" a	13' 10" a	21' 4" e	18' 5" e	15' 1" e	21' 4" a	18' 5" a	13' 10" a
1400S162-54	50	24' 1" e	20' 10" e	17' 0" e	24' 1" a	20' 3" a	14' 10" a	24' 0" e	20' 10" e	17' 0" e	24' 1" a	20' 3" a	14' 10" a
1400S200-54	33	23' 2" e	20' 0" e	16' 4" e	23' 2" a	19' 4" a	14' 3" a	23' 2" e	20' 0" e	16' 4" e	23' 2" a	19' 4" a	14' 3" a
1400S200-54	50	26' 2" e	22' 8" e	18' 6" e	25' 7" a	20' 8" a	15' 1" a	25' 0" e	22' 8" e	18' 6" e	25' 7" a	20' 8" a	15' 1" a
1400S250-54	33	24' 1" e	20' 10" e	17' 0" e	24' 0" a	19' 6" a	14' 4" a	24' 1" e	20' 10" e	17' 0" e	24' 0" a	19' 6" a	14' 4" a
1400S250-54	50	27' 2" e	23' 7" e	19' 3" e	25' 10" a	20' 10" a	15' 3" a	25' 11" e	23' 6" e	19' 3" e	25' 10" a	20' 10" a	15' 3" a
1400S300-54	50	27' 10" e	24' 1" e	19' 7" e	26' 0" a	20' 11" a	15' 3" a	26' 9" e	24' 1" e	19' 7" e	26' 0" a	20' 11" a	15' 3" a
1400S162-68	33	25' 5"	22' 0" e	17' 11" e	25' 5" i	22' 0" i	17' 11" a	25' 5"	22' 0" e	17' 11" e	25' 5" i	22' 0" i	17' 11" a
1400S162-68	50	28' 8"	24' 11"	20' 4" e	28' 9" i	24' 11" i	20' 4" i	26' 3"	23' 9"	20' 4" e	28' 9" i	24' 11" i	20' 4" i
1400S200-68	33	27' 5" e	23' 9" e	19' 4" e	27' 5" i	23' 9" i	19' 4" a	27' 3" e	23' 9" e	19' 4" e	27' 5" i	23' 9" i	19' 4" a
1400S200-68	50	29' 11"	26' 11"	22' 0" e	31' 1" i	26' 11" i	22' 0" i	27' 3"	24' 9"	21' 6" e	30' 5" i	26' 11" i	22' 0" i
1400S250-68	33	28' 5" e	24' 8" e	20' 1" e	28' 5" i	24' 8" i	20' 1" a	28' 4" e	24' 8" e	20' 1" e	28' 5" i	24' 8" i	20' 1" a
1400S250-68	50	31' 0"	27' 11"	22' 10" e	32' 3" i	27' 11" i	22' 10" i	28' 4"	25' 8"	22' 4" e	31' 7" i	27' 11" i	22' 10" i
1400S300-68	50	32' 0"	28' 7"	23' 4" e	33' 0" i	28' 7" i	23' 4" i	29' 3"	26' 6"	23' 0" e	32' 7" i	28' 7" i	23' 4" i
1400S162-97	33	32' 9"	28' 6"	23' 4"	32' 11" i	28' 6" i	23' 4" i	29' 9"	27' 0"	23' 4"	32' 11" i	28' 6" i	23' 4" i
1400S162-97	50	32' 9"	29' 8"	25' 10"	36' 7" i	32' 8" i	26' 8" i	29' 9"	27' 0"	23' 7"	33' 4"	30' 3" i	26' 4" i
1400S200-97	33	34' 0"	30' 6"	24' 11"	35' 3" i	30' 6" i	24' 11" i	30' 10"	28' 1"	24' 6"	34' 8" i	30' 6" i	24' 11" i
1400S200-97	50	34' 0"	30' 10"	26' 10"	38' 0" i	34' 6" i	28' 7" i	30' 10"	28' 1"	24' 6"	34' 8"	31' 5" i	27' 5" i
1400S250-97	33	35' 2"	31' 8"	25' 11" e	36' 7" i	31' 8" i	25' 11" i	31' 11"	29' 0"	25' 4" e	35' 11" i	31' 8" i	25' 11" i
1400S250-97	50	35' 2"	31' 11"	27' 10"	39' 5" i	35' 9" i	29' 7" i	31' 11"	29' 0"	25' 4"	35' 11"	32' 7" i	28' 5" i
1400S300-97	50	36' 3"	33' 0"	28' 9"	40' 8" i	36' 11" i	30' 4" i	33' 0"	29' 11"	26' 2"	37' 0"	33' 8" i	29' 4" i

FLOOR JOIST SPAN TABLES

10 PSF DEAD LOAD AND 50 PSF LIVE LOAD

		L/360 Live Load Deflection						L/480 Live Load Deflection					
Section	Fy(ksi)	Single Span Spacing (in) 16			Two Equal Spans Spacing (in)			Single Span Spacing (in)			Two Equal Spans Spacing (in)		
600S162-33	33	10' 3" e	8' 11" e	7' 3" e	10' 3" i	8' 11" a	7' 1" a	10' 3" e	8' 11" e	7' 3" e	10' 3" i	8' 11" a	7' 1" a
600S200-33	33	10' 11" e	9' 6" e	7' 9" e	10' 11" a	9' 6" a	7' 2" a	10' 11" e	9' 6" e	7' 9" e	10' 11" a	9' 6" a	7' 2" a
600S162-43	33	12' 8"	11' 0" e	9' 0" e	12' 8" i	11' 0" i	9' 0" a	11' 6"	10' 5" e	9' 0" e	12' 8" i	11' 0" i	9' 0" a
600S200-43	33	13' 1"	11' 4" e	9' 3" e	13' 1" i	11' 4" i	9' 3" a	12' 1"	11' 0" e	9' 3" e	13' 1" i	11' 4" i	9' 3" a
600S250-43	33	13' 5" e	11' 7" e	9' 6" e	13' 5" i	11' 7" i	9' 6" a	12' 8"	11' 6" e	9' 6" e	13' 5" i	11' 7" i	9' 6" a
600S162-54	33	13' 7"	12' 4"	10' 6" e	14' 10" i	12' 10" i	10' 6" i	12' 4"	11' 2"	9' 9"	13' 10" i	12' 7" i	10' 6" i
600S162-54	50	13' 7"	12' 4"	10' 9"	15' 3"	13' 10" i	12' 0" i	12' 4"	11' 2"	9' 9"	13' 10"	12' 7" i	11' 0" i
600S200-54	33	14' 3"	13' 0"	11' 1" e	15' 8" i	13' 7" i	11' 1" i	13' 0"	11' 9"	10' 3" e	14' 7" i	13' 3" i	11' 1" i
600S200-54	50	14' 3"	13' 0"	11' 4"	16' 0" i	14' 7" i	12' 4" i	13' 0"	11' 9"	10' 3"	14' 7"	13' 3" i	11' 7" i
600S250-54	33	14' 11"	13' 6"	11' 0" e	15' 7" i	13' 6" i	11' 0" i	13' 7"	12' 4"	10' 9" e	15' 3" i	13' 6" i	11' 0" i
600S250-54	50	14' 11"	13' 7"	11' 10"	16' 9" i	15' 3" i	12' 8" i	13' 7"	12' 4"	10' 9"	15' 3"	13' 10" i	12' 1" i
600S300-54	50	15' 7"	14' 1"	12' 3"	17' 3" i	15' 7" i	12' 10" i	14' 2"	12' 10"	11' 2"	15' 10" i	14' 4" i	12' 5" i
600S162-68	33	14' 7"	13' 3"	11' 7"	16' 4" i	14' 10" i	12' 2" i	13' 3"	12' 0"	10' 6"	14' 10" i	13' 6" i	11' 9" i
600S162-68	50	14' 7"	13' 3"	11' 7"	16' 4"	14' 10"	13' 0" i	13' 3"	12' 0"	10' 6"	14' 10"	13' 6"	11' 9"
600S200-68	33	15' 4"	13' 11"	12' 2"	17' 2" i	15' 7" i	12' 11" i	13' 11"	12' 8"	11' 0"	15' 7" i	14' 2" i	12' 5" i
600S200-68	50	15' 4"	13' 11"	12' 2"	17' 2"	15' 7"	13' 8" i	13' 11"	12' 8"	11' 0"	15' 7"	14' 2"	12' 5"
600S250-68	33	16' 1"	14' 7"	12' 9"	18' 0" i	16' 2" i	13' 3" i	14' 7"	13' 3"	11' 7"	16' 4" i	14' 10" i	13' 0" i
600S250-68	50	16' 1"	14' 7"	12' 9"	18' 0"	16' 4" i	14' 4" i	14' 7"	13' 3"	11' 7"	16' 4"	14' 10"	13' 0" i
600S300-68	50	16' 9"	15' 2"	13' 3"	18' 9"	17' 0" i	14' 10" i	15' 2"	13' 10"	12' 1"	17' 1"	15' 6"	13' 6" i
600S162-97	33	16' 2"	14' 8"	12' 10"	18' 1"	16' 5"	14' 4" i	14' 8"	13' 4"	11' 8"	16' 5"	14' 11"	13' 1" i
600S162-97	50	16' 2"	14' 8"	12' 10"	18' 1"	16' 5"	14' 4"	14' 8"	13' 4"	11' 8"	16' 5"	14' 11"	13' 1"
600S200-97	33	17' 0"	15' 5"	13' 6"	19' 1"	17' 4"	15' 2" i	15' 5"	14' 0"	12' 3"	17' 4"	15' 9"	13' 9" i
600S200-97	50	17' 0"	15' 5"	13' 6"	19' 1"	17' 4"	15' 2"	15' 5"	14' 0"	12' 3"	17' 4"	15' 9"	13' 9"
600S250-97	33	17' 10"	16' 3"	14' 2"	20' 0"	18' 2"	15' 11" i	16' 3"	14' 9"	12' 10"	18' 2"	16' 6"	14' 5" i
600S250-97	50	17' 10"	16' 3"	14' 2"	20' 0"	18' 2"	15' 11"	16' 3"	14' 9"	12' 10"	18' 2"	16' 6"	14' 5"
600S300-97	50	18' 7"	16' 11"	14' 9"	20' 11"	19' 0"	16' 7"	16' 11"	15' 4"	13' 5"	19' 0"	17' 3"	15' 1"
800S162-33	33	11' 10" e	10' 3" e	7' 11" e	10' 9" a	8' 8" a	6' 3" a	11' 10" e	10' 3" e	7' 11" e	10' 9" a	8' 8" a	6' 3" a
800S200-33	33	12' 8" e	11' 0" e	7' 11" e	11' 2" a	8' 11" a	6' 4" a	12' 8" e	11' 0" e	7' 11" e	11' 2" a	8' 11" a	6' 4" a
800S162-43	33	14' 3" e	12' 4" e	10' 1" e	14' 3" i	12' 4" i	10' 1" a	14' 3" e	12' 4" e	10' 1" e	14' 3" i	12' 4" i	10' 1" a
800S200-43	33	15' 3" e	13' 3" e	10' 10" e	15' 3" i	13' 3" a	10' 10" a	15' 2" e	13' 3" e	10' 10" e	15' 3" i	13' 3" a	10' 10" a
800S250-43	33	15' 8" e	13' 7" e	11' 1" e	15' 8" i	13' 7" a	11' 1" a	15' 8" e	13' 7" e	11' 1" e	15' 8" i	13' 7" a	11' 1" a
800S162-54	33	16' 8"	14' 5" e	11' 9" e	16' 8" i	14' 5" i	11' 9" i	15' 7"	14' 1"	11' 9" e	16' 8" i	14' 5" i	11' 9" i
800S162-54	50	17' 1"	15' 6"	13' 6"	19' 1" i	16' 6" i	13' 6" i	15' 7"	14' 1"	12' 4"	17' 5" i	15' 10" i	13' 6" i
800S200-54	33	17' 11"	15' 11" e	13' 0" e	18' 4" i	15' 11" i	13' 0" a	16' 3"	14' 9" e	12' 11" e	18' 3" i	15' 11" i	13' 0" a
800S200-54	50	17' 11"	16' 3"	14' 3"	20' 1" i	17' 8" i	14' 5" i	16' 3"	14' 9"	12' 11"	18' 3" i	16' 7" i	14' 5" i
800S250-54	33	18' 3"	15' 10" e	12' 11" e	18' 3" i	15' 10" i	12' 11" a	17' 0"	15' 5" e	12' 11" e	18' 3" i	15' 10" i	12' 11" a
800S250-54	50	18' 8"	17' 0"	14' 9" e	20' 10" i	18' 1" i	14' 9" i	17' 0"	15' 5"	13' 6"	19' 1" i	17' 4" i	14' 9" i
800S300-54	50	19' 4"	17' 6"	14' 11" e	21' 2" i	18' 4" i	14' 11" i	17' 8"	16' 0"	13' 11"	19' 9" i	17' 10" i	14' 11" i
800S162-68	33	18' 4"	16' 8"	13' 9"	19' 5" i	16' 10" i	13' 9" i	16' 8"	15' 2"	13' 3"	18' 9" i	16' 10" i	13' 9" i
800S162-68	50	18' 4"	16' 8"	14' 7"	20' 7"	18' 9" i	15' 10" i	16' 8"	15' 2"	13' 3"	18' 9"	17' 0"	14' 10" i
800S200-68	33	19' 3"	17' 6"	15' 3" e	21' 7" i	18' 8" i	15' 3" i	17' 6"	15' 11"	13' 10"	19' 7" i	17' 10" i	15' 3" i
800S200-68	50	19' 3"	17' 6"	15' 3"	21' 7"	19' 7" i	17' 2" i	17' 6"	15' 11"	13' 10"	19' 7"	17' 10"	15' 7" i
800S250-68	33	20' 1"	18' 3"	15' 7" e	22' 0" i	19' 1" i	15' 7" i	18' 3"	16' 7"	14' 6"	20' 6" i	18' 7" i	15' 7" i
800S250-68	50	20' 1"	18' 3"	15' 11"	22' 7" i	20' 6" i	17' 3" i	18' 3"	16' 7"	14' 6"	20' 6"	18' 7" i	16' 3" i
800S300-68	50	20' 10"	18' 11"	16' 6"	23' 4" i	21' 2" i	17' 7" i	18' 11"	17' 3"	15' 0"	21' 3"	19' 4" i	16' 10" i
800S162-97	33	20' 5"	18' 6"	16' 2"	22' 11"	20' 10" i	18' 0" i	18' 6"	16' 10"	14' 9"	20' 10"	18' 11"	16' 6" i
800S162-97	50	20' 5"	18' 6"	16' 2"	22' 11"	20' 10"	18' 2"	18' 6"	16' 10"	14' 9"	20' 10"	18' 11"	16' 6"
800S200-97	33	21' 5"	19' 5"	17' 0"	24' 0"	21' 10" i	19' 0" i	19' 5"	17' 8"	15' 5"	21' 10"	19' 10"	17' 4" i
800S200-97	50	21' 5"	19' 5"	17' 0"	24' 0"	21' 10"	19' 1"	19' 5"	17' 8"	15' 5"	21' 10"	19' 10"	17' 4"
800S250-97	33	22' 4"	20' 4"	17' 9"	25' 1"	22' 10" i	19' 10" i	20' 4"	18' 5"	16' 1"	22' 10"	20' 9"	18' 1" i
800S250-97	50	22' 4"	20' 4"	17' 9"	25' 1"	22' 10"	19' 11"	20' 4"	18' 5"	16' 1"	22' 10"	20' 9"	18' 1"
800S300-97	50	23' 3"	21' 1"	18' 5"	26' 1"	23' 9"	20' 9" i	21' 1"	19' 2"	16' 9"	23' 9"	21' 7"	18' 10"
1000S162-43	33	15' 10" e	13' 8" e	11' 2" e	15' 10" a	13' 4" a	9' 11" a	15' 10" e	13' 8" e	11' 2" e	15' 10" a	13' 4" a	9' 11" a
1000S200-43	33	17' 1" e	14' 9" e	12' 1" e	17' 0" a	13' 10" a	10' 2" a	17' 1" e	14' 9" e	12' 1" e	17' 0" a	13' 10" a	10' 2" a
1000S250-43	33	17' 6" e	15' 2" e	12' 5" e	17' 6" a	14' 2" a	10' 5" a	17' 6" e	15' 2" e	12' 5" e	17' 6" a	14' 2" a	10' 5" a
1000S162-54	33	18' 7" e	16' 1" e	13' 2" e	18' 7" i	16' 1" i	13' 2" a	18' 6" e	16' 1" e	13' 2" e	18' 7" i	16' 1" i	13' 2" a
1000S162-54	50	20' 4"	18' 4"	15' 0" e	21' 2" i	18' 4" i	15' 0" i	18' 6"	16' 10"	14' 7" e	20' 8" i	18' 4" i	15' 0" i
1000S200-54	33	20' 0" e	17' 3" e	14' 1" e	20' 0" i	17' 3" i	14' 1" a	19' 4" e	17' 3" e	14' 1" e	20' 0" i	17' 3" i	14' 1" a
1000S200-54	50	21' 3"	19' 3"	16' 1" e	22' 9" i	19' 9" i	16' 1" i	19' 4"	17' 7"	15' 3" e	21' 8" i	19' 7" i	16' 1" i
1000S250-54	33	20' 7" e	17' 10" e	14' 6" e	20' 7" i	17' 10" i	14' 6" a	20' 3" e	17' 10" e	14' 6" e	20' 7" i	17' 10" i	14' 6" a
1000S250-54	50	22' 4"	20' 3"	16' 6" e	23' 4" i	20' 3" i	16' 6" i	20' 3"	18' 5"	16' 1" e	22' 9" i	20' 3" i	16' 6" i
1000S300-54	50	23' 0"	20' 7"	16' 9" e	23' 9" i	20' 7" i	16' 9" i	21' 0"	19' 0"	16' 7" e	23' 5" i	20' 7" i	16' 9" i
1000S162-68	33	21' 10"	18' 11"	15' 5" e	21' 10" i	18' 11" i	15' 5" i	20' 1"	18' 3"	15' 5" e	21' 10" i	18' 11" i	15' 5" i
1000S162-68	50	22' 1"	20' 0"	17' 5"	24' 8" i	21' 8" i	17' 8" i	20' 1"	18' 3"	15' 11"	22' 6" i	20' 5" i	17' 8" i
1000S200-68	33	23' 0"	20' 3"	16' 6" e	23' 4" i	20' 3" i	16' 6" i	20' 11"	19' 0"	16' 6" e	23' 4" i	20' 3" i	16' 6" i
1000S200-68	50	23' 0"	20' 11"	18' 3"	25' 9" i	23' 2" i	18' 11" i	20' 11"	19' 0"	16' 7"	23' 6" i	21' 4" i	18' 7" i
1000S250-68	33	24' 0"	21' 6" e	17' 7" e	24' 10" i	21' 6" i	17' 7" i	21' 9"	19' 9"	17' 3" e	24' 5" i	21' 6" i	17' 7" i
1000S250-68	50	24' 0"	21' 9"	19' 0"	26' 11" i	23' 10" i	19' 5" i	21' 9"	19' 9"	17' 3"	24' 5" i	22' 3" i	19' 5" i
1000S300-68	50	24' 10"	22' 7"	19' 7"	27' 9" i	24' 3" i	19' 9" i	22' 7"	20' 6"	17' 11"	25' 4" i	23' 0" i	19' 9" i
1000S162-97	33	24' 7"	22' 4"	19' 4"	27' 4" i	23' 8" i	19' 4" i	22' 4"	20' 3"	17' 9"	25' 1" i	22' 9" i	19' 4" i
1000S162-97	50	24' 7"	22' 4"	19' 6"	27' 7"	25' 1"	21' 11" i	22' 4"	20' 3"	17' 9"	25' 1"	22' 9"	19' 11"
1000S200-97	33	25' 8"	23' 4"	20' 4"	28' 10" i	25' 3" i	20' 7" i	23' 4"	21' 2"	18' 6"	26' 2" i	23' 9" i	20' 7" i
1000S200-97	50	25' 8"	23' 4"	20' 4"	28' 10"	26' 2"	22' 10" i	23' 4"	21' 2"	18' 6"	26' 2"	23' 9"	20' 9"
1000S250-97	33	26' 9"	24' 3"	21' 2"	30' 0" i	27' 3" i	22' 7" i	24' 3"	22' 1"	19' 3"	27' 3"	24' 9" i	21' 8" i
1000S250-97	50	26' 9"	24' 3"	21' 2"	30' 0"	27' 3"	23' 10" i	24' 3"	22' 1"	19' 3"	27' 3"	24' 9"	21' 8"
1000S300-97	50	27' 8"	25' 2"	22' 0"	31' 1"	28' 3"	24' 8" i	25' 2"	22' 10"	20' 0"	28' 3"	25' 8"	22' 5" i
1200S162-54	33	20' 1" e	17' 5" e	14' 3" e	20' 1" a	17' 5" a	14' 3" a	20' 1" e	17' 5" e	14' 3" e	20' 1" a	17' 5" a	14' 3" a
1200S162-54	50	22' 10" e	19' 9" e	16' 1" e	22' 10" a	19' 9" a	15' 6" a	21' 4" e	19' 4" e	16' 1" e	22' 10" a	19' 9" a	15' 6" a
1200S200-54	33	21' 9" e	18' 10" e	15' 4" e	21' 9" a	18' 10" a	14' 10" a	21' 9" e	18' 10" e	15' 4" e	21' 9" a	18' 10" a	14' 10" a
1200S200-54	50	24' 4" e	21' 4" e	17' 5" e	24' 8" a	21' 4" a	15' 10" a	22' 3" e	20' 2" e	17' 5" e	24' 8" a	21' 4" a	15' 10" a
1200S250-54	33	22' 6" e	19' 5" e	15' 11" e	22' 6" a	19' 5" a	14' 11" a	22' 6" e	19' 5" e	15' 11" e	22' 6" a	19' 5" a	14' 11" a
1200S250-54	50	25' 4" e	22' 1" e	18' 0" e	25' 6" a	21' 6" a	16' 0" a	23' 1" e	21' 0" e	18' 0" e	25' 6" a	21' 6" a	16' 0" a
1200S300-54	50	26' 0" e	22' 6" e	18' 4" e	26' 0" a	21' 10" a	16' 3" a	24' 3" e	21' 11" e	18' 4" e	26' 0" a	21' 10" a	16' 3" a
1200S162-68	33	23' 10"	20' 7" e	16' 10" e	23' 10" i	20' 7" i	16' 10" i	23' 3"	20' 7" e	16' 10" e	23' 10" i	20' 7" i	16' 10" i
1200S162-68	50	25' 6"	23' 1"	19' 2"	27' 1" i	23' 6" i	19' 2" i	23' 3"	21' 1"	18' 4"	25' 11" i	23' 6" i	19' 2" i
1200S200-68	33	25' 7"	22' 2" e	18' 1" e	25' 7" i	22' 2" i	18' 1" i	24' 2"	21' 11" e	18' 1" e	25' 7" i	22' 2" i	18' 1" i
1200S200-68	50	26' 6"	24' 1"	20' 7" e	29' 2" i	25' 3" i	20' 7" i	24' 2"	21' 11"	19' 1"	27' 1" i	24' 6" i	20' 7" i
1200S250-68	33	26' 5"	22' 11" e	18' 8" e	26' 5" i	22' 11" i	18' 8" a	25' 2"	22' 10" e	18' 8" e	26' 5" i	22' 11" i	18' 8" a
1200S250-68	50	27' 7"	25' 0"	21' 3" e	30' 1" i	26' 1" i	21' 3" i	25' 2"	22' 10"	19' 10"	28' 1" i	25' 6" i	21' 3" i
1200S300-68	50	28' 8"	26' 0"	21' 8" e	30' 8" i	26' 7" i	21' 8" i	26' 1"	23' 8"	20' 8" e	29' 3" i	26' 6" i	21' 8" i
1200S162-97	33	28' 8"	26' 1"	21' 7"	30' 6" i	26' 5" i	21' 7" i	26' 1"	23' 8"	20' 8"	29' 3" i	26' 5" i	21' 7" i
1200S162-97	50	28' 8"	26' 1"	22' 9"	32' 2"	29' 3" i	24' 10" i	26' 1"	23' 8"	20' 8"	29' 3"	26' 7"	23' 3" i
1200S200-97	33	29' 10"	27' 1"	23' 0"	32' 7" i	28' 2" i	23' 0" i	27' 1"	24' 8"	21' 6"	30' 5" i	27' 8" i	23' 0" i
1200S200-97	50	29' 10"	27' 1"	23' 8"	33' 6"	30' 5" i	26' 7" i	27' 1"	24' 8"	21' 6"	30' 5"	27' 8"	24' 2" i
1200S250-97	33	31' 0"	28' 2"	23' 10"	33' 9" i	29' 3" i	23' 10" i	28' 2"	25' 7"	22' 4"	31' 7" i	28' 9" i	23' 10" i
1200S250-97	50	31' 0"	28' 2"	24' 7"	34' 9"	31' 7" i	27' 5" i	28' 2"	25' 7"	22' 4"	31' 7"	28' 9"	25' 1" i
1200S300-97	50	32' 0"	29' 1"	25' 5"	36' 0"	32' 8" i	28' 0" i	29' 1"	26' 5"	23' 1"	32' 8"	29' 8"	25' 11" i
1400S162-54	33	21' 4" e	18' 5" e	15' 1" e	21' 4" a	18' 5" a	13' 10" a	21' 4" e	18' 5" e	15' 1" e	21' 4" a	18' 5" a	13' 10" a
1400S162-54	50	24' 1" e	20' 10" e	17' 0" e	24' 1" a	20' 3" a	14' 10" a	24' 0" e	20' 10" e	17' 0" e	24' 1" a	20' 3" a	14' 10" a
1400S200-54	33	23' 2" e	20' 0" e	16' 4" e	23' 2" a	19' 4" a	14' 3" a	23' 2" e	20' 0" e	16' 4" e	23' 2" a	19' 4" a	14' 3" a
1400S200-54	50	26' 2" e	22' 8" e	18' 6" e	25' 7" a	20' 8" a	15' 1" a	25' 0" e	22' 8" e	18' 6" e	25' 7" a	20' 8" a	15' 1" a
1400S250-54	33	24' 1" e	20' 10" e	17' 0" e	24' 0" a	19' 6" a	14' 4" a	24' 1" e	20' 10" e	17' 0" e	24' 0" a	19' 6" a	14' 4" a
1400S250-54	50	27' 2" e	23' 7" e	19' 3" e	25' 10" a	20' 10" a	15' 3" a	25' 11" e	23' 6" e	19' 3" e	25' 10" a	20' 10" a	15' 3" a
1400S300-54	50	27' 10" e	24' 1" e	19' 7" e	26' 0" a	20' 11" a	15' 3" a	26' 9" e	24' 1" e	19' 7" e	26' 0" a	20' 11" a	15' 3" a
1400S162-68	33	25' 5"	22' 0" e	17' 11" e	25' 5" i	22' 0" i	17' 11" a	25' 5"	22' 0" e	17' 11" e	25' 5" i	22' 0" i	17' 11" a
1400S162-68	50	28' 8"	24' 11"	20' 4" e	28' 9" i	24' 11" i	20' 4" i	26' 3"	23' 9"	20' 4" e	28' 9" i	24' 11" i	20' 4" i
1400S200-68	33	27' 5" e	23' 9" e	19' 4" e	27' 5" i	23' 9" i	19' 4" a	27' 3" e	23' 9" e	19' 4" e	27' 5" i	23' 9" i	19' 4" a
1400S200-68	50	29' 11"	26' 11"	22' 0" e	31' 1" i	26' 11" i	22' 0" i	27' 3"	24' 9"	21' 6" e	30' 5" i	26' 11" i	22' 0" i
1400S250-68	33	28' 5" e	24' 8" e	20' 1" e	28' 5" i	24' 8" i	20' 1" a	28' 4" e	24' 8" e	20' 1" e	28' 5" i	24' 8" i	20' 1" a
1400S250-68	50	31' 0"	27' 11"	22' 10" e	32' 3" i	27' 11" i	22' 10" i	28' 4"	25' 8"	22' 4" e	31' 7" i	27' 11" i	22' 10" i
1400S300-68	50	32' 0"	28' 7"	23' 4" e	33' 0" i	28' 7" i	23' 4" i	29' 3"	26' 6"	23' 0" e	32' 7" i	28' 7" i	23' 4" i
1400S162-97	33	32' 9"	28' 6"	23' 4"	32' 11" i	28' 6" i	23' 4" i	29' 9"	27' 0"	23' 4"	32' 11" i	28' 6" i	23' 4" i
1400S162-97	50	32' 9"	29' 8"	25' 10"	36' 7" i	32' 8" i	26' 8" i	29' 9"	27' 0"	23' 7"	33' 4"	30' 3" i	26' 4" i
1400S200-97	33	34' 0"	30' 6"	24' 11"	35' 3" i	30' 6" i	24' 11" i	30' 10"	28' 1"	24' 6"	34' 8" i	30' 6" i	24' 11" i
1400S200-97	50	34' 0"	30' 10"	26' 10"	38' 0" i	34' 6" i	28' 7" i	30' 10"	28' 1"	24' 6"	34' 8"	31' 5" i	27' 5" i
1400S250-97	33	35' 2"	31' 8"	25' 11" e	36' 7" i	31' 8" i	25' 11" i	31' 11"	29' 0"	25' 4" e	35' 11" i	31' 8" i	25' 11" i
1400S250-97	50	35' 2"	31' 11"	27' 10"	39' 5" i	35' 9" i	29' 7" i	31' 11"	29' 0"	25' 4"	35' 11"	32' 7" i	28' 5" i
1400S300-97	50	36' 3"	33' 0"	28' 9"	40' 8" i	36' 11" i	30' 4" i	33' 0"	29' 11"	26' 2"	37' 0"	33' 8" i	29' 4" i

FLOOR JOIST SPAN TABLES

15 PSF DEAD LOAD AND 125 PSF LIVE LOAD

		L/360 Live Load Deflection						L/480 Live Load Deflection					
Section	Fy(ksi)	Single Span Spacing (in) 16			Two Equal Spans Spacing (in)			Single Span Spacing (in)			Two Equal Spans Spacing (in)		
600S162-33	33	6' 9" e	5' 10" e	4' 7" e	6' 3" a	5' 1" a	3' 8" a	6' 9" e	5' 10" e	4' 7" e	6' 3" a	5' 1" a	3' 8" a
600S200-33	33	7' 2" e	6' 2" e	4' 7" e	6' 5" a	5' 2" a	3' 8" a	7' 2" e	6' 2" e	4' 7" e	6' 5" a	5' 2" a	3' 8" a
600S162-43	33	8' 4" e	7' 2" e	5' 10" e	8' 4" a	7' 2" a	5' 9" a	8' 4" e	7' 2" e	5' 10" e	8' 4" a	7' 2" a	5' 9" a
600S200-43	33	8' 7" e	7' 5" e	6' 1" e	8' 7" a	7' 5" a	5' 9" a	8' 7" e	7' 5" e	6' 1" e	8' 7" a	7' 5" a	5' 9" a
600S250-43	33	8' 9" e	7' 7" e	6' 3" e	8' 9" a	7' 7" a	5' 10" a	8' 9" e	7' 7" e	6' 3" e	8' 9" a	7' 7" a	5' 10" a
600S162-54	33	9' 8" e	8' 5" e	6' 10" e	9' 8" i	8' 5" i	6' 10" a	9' 1" e	8' 3" e	6' 10" e	9' 8" i	8' 5" i	6' 10" a
600S162-54	50	10' 0"	9' 1"	7' 10" e	11' 1" i	9' 7" i	7' 10" i	9' 1"	8' 3"	7' 3" e	10' 2" i	9' 3" i	7' 10" i
600S200-54	33	10' 3" e	8' 11" e	7' 3" e	10' 3" i	8' 11" a	7' 3" a	9' 7" e	8' 8" e	7' 3" e	10' 3" i	8' 11" a	7' 3" a
600S200-54	50	10' 6"	9' 7"	8' 1" e	11' 5" i	9' 11" i	8' 1" i	9' 7"	8' 8"	7' 7" e	10' 9" i	9' 9" i	8' 1" i
600S250-54	33	10' 3" e	8' 10" e	7' 3" e	10' 3" i	8' 10" a	7' 3" a	10' 0" e	8' 10" e	7' 3" e	10' 3" i	8' 10" a	7' 3" a
600S250-54	50	11' 0"	10' 0" e	8' 3" e	11' 8" i	10' 2" i	8' 3" i	10' 0"	9' 1"	7' 11" e	11' 3" i	10' 2" i	8' 3" i
600S300-54	50	11' 4"	10' 3" e	8' 5" e	11' 11" i	10' 3" i	8' 5" i	10' 5"	9' 5"	8' 2" e	11' 6" i	10' 3" i	8' 5" i
600S162-68	33	10' 9"	9' 9" e	8' 0" e	11' 4" i	9' 9" i	8' 0" i	9' 9"	8' 10"	7' 9" e	10' 11" i	9' 9" i	8' 0" i
600S162-68	50	10' 9"	9' 9"	8' 6"	12' 0" i	10' 11" i	9' 3" i	9' 9"	8' 10"	7' 9"	10' 11" i	9' 11" i	8' 8" i
600S200-68	33	11' 3"	10' 3" e	8' 5" e	11' 11" i	10' 4" i	8' 5" i	10' 3"	9' 4"	8' 2" e	11' 6" i	10' 4" i	8' 5" i
600S200-68	50	11' 3"	10' 3"	8' 11"	12' 8" i	11' 6" i	9' 9" i	10' 3"	9' 4"	8' 2"	11' 6" i	10' 5" i	9' 2" i
600S250-68	33	11' 10"	10' 7" e	8' 8" e	12' 3" i	10' 7" i	8' 8" a	10' 9"	9' 9" e	8' 6" e	12' 1" i	10' 7" i	8' 8" a
600S250-68	50	11' 10"	10' 9"	9' 5"	13' 3" i	11' 10" i	9' 8" i	10' 9"	9' 9"	8' 6"	12' 1" i	10' 11" i	9' 7" i
600S300-68	50	12' 4"	11' 2"	9' 9"	13' 9" i	12' 0" i	9' 10" i	11' 2"	10' 2"	8' 10"	12' 6" i	11' 4" i	9' 10" i
600S162-97	33	11' 11"	10' 10"	9' 5"	13' 4" i	11' 8" i	9' 7" i	10' 10"	9' 10"	8' 7"	12' 1" i	11' 0" i	9' 7" i
600S162-97	50	11' 11"	10' 10"	9' 5"	13' 4"	12' 1"	10' 7" i	10' 10"	9' 10"	8' 7"	12' 1"	11' 0"	9' 7" i
600S200-97	33	12' 6"	11' 4"	9' 11"	14' 1" i	12' 6" i	10' 2" i	11' 4"	10' 4"	9' 0"	12' 9" i	11' 7" i	10' 2" i
600S200-97	50	12' 6"	11' 4"	9' 11"	14' 1"	12' 9"	11' 2" i	11' 4"	10' 4"	9' 0"	12' 9"	11' 7"	10' 2" i
600S250-97	33	13' 2"	11' 11"	10' 5"	14' 9" i	13' 2" i	10' 6" i	11' 11"	10' 10"	9' 6"	13' 5" i	12' 2" i	10' 6" i
600S250-97	50	13' 2"	11' 11"	10' 5"	14' 9"	13' 5"	11' 9" i	11' 11"	10' 10"	9' 6"	13' 5"	12' 2"	10' 8" i
600S300-97	50	13' 9"	12' 6"	10' 11"	15' 5"	14' 0" i	12' 2" i	12' 6"	11' 4"	9' 11"	14' 0"	12' 9"	11' 1" i
800S162-33	33	6' 9" e	5' 1" e	3' 5" e	5' 5" a	4' 1" a	2' 9" a	6' 9" e	5' 1" e	3' 5" e	5' 5" a	4' 1" a	2' 9" a
800S200-33	33	6' 9" e	5' 1" e	3' 5" e	5' 5" a	4' 1" a	2' 9" a	6' 9" e	5' 1" e	3' 5" e	5' 5" a	4' 1" a	2' 9" a
800S162-43	33	9' 4" e	8' 1" e	6' 7" e	9' 3" a	7' 6" a	5' 6" a	9' 4" e	8' 1" e	6' 7" e	9' 3" a	7' 6" a	5' 6" a
800S200-43	33	10' 0" e	8' 8" e	7' 1" e	9' 10" a	8' 0" a	5' 10" a	10' 0" e	8' 8" e	7' 1" e	9' 10" a	8' 0" a	5' 10" a
800S250-43	33	10' 3" e	8' 11" e	7' 3" e	9' 11" a	8' 0" a	5' 10" a	10' 3" e	8' 11" e	7' 3" e	9' 11" a	8' 0" a	5' 10" a
800S162-54	33	10' 11" e	9' 5" e	7' 9" e	10' 11" i	9' 5" a	7' 9" a	10' 11" e	9' 5" e	7' 9" e	10' 11" i	9' 5" a	7' 9" a
800S162-54	50	12' 6" e	10' 10" e	8' 10" e	12' 6" i	10' 10" i	8' 10" a	11' 5"	10' 4" e	8' 10" e	12' 6" i	10' 10" i	8' 10" a
800S200-54	33	12' 0" e	10' 5" e	8' 6" e	12' 0" a	10' 5" a	8' 6" a	12' 0" e	10' 5" e	8' 6" e	12' 0" a	10' 5" a	8' 6" a
800S200-54	50	13' 2" e	11' 7" e	9' 5" e	13' 4" i	11' 7" i	9' 5" a	12' 0"	10' 11" e	9' 5" e	13' 4" i	11' 7" i	9' 5" a
800S250-54	33	12' 0" e	10' 4" e	8' 6" e	12' 0" a	10' 4" a	8' 6" a	12' 0" e	10' 4" e	8' 6" e	12' 0" a	10' 4" a	8' 6" a
800S250-54	50	13' 8" e	11' 10" e	9' 8" e	13' 8" i	11' 10" i	9' 6" a	12' 6" e	11' 4" e	9' 8" e	13' 8" i	11' 10" i	9' 6" a
800S300-54	50	13' 10" e	12' 0" e	9' 9" e	13' 10" i	12' 0" i	9' 7" a	12' 11" e	11' 8" e	9' 9" e	13' 10" i	12' 0" i	9' 7" a
800S162-68	33	12' 8" e	11' 0" e	9' 0" e	12' 8" i	11' 0" i	9' 0" a	12' 4"	11' 0" e	9' 0" e	12' 8" i	11' 0" i	9' 0" a
800S162-68	50	13' 6"	12' 4"	10' 4" e	14' 8" i	12' 8" i	10' 4" i	12' 4"	11' 2"	9' 9" e	13' 10" i	12' 7" i	10' 4" i
800S200-68	33	14' 1" e	12' 3" e	10' 0" e	14' 1" i	12' 3" i	10' 0" a	12' 11" e	11' 8" e	10' 0" e	14' 1" i	12' 3" i	10' 0" a
800S200-68	50	14' 2"	12' 11"	11' 3" e	15' 11" i	14' 0" i	11' 5" i	12' 11"	11' 8"	10' 3" e	14' 5" i	13' 2" i	11' 5" i
800S250-68	33	14' 5" e	12' 6" e	10' 2" e	14' 5" i	12' 6" a	10' 2" a	13' 5" e	12' 3" e	10' 2" e	14' 5" i	12' 6" a	10' 2" a
800S250-68	50	14' 10"	13' 5"	11' 4" e	16' 0" i	13' 10" i	11' 4" i	13' 5"	12' 3"	10' 8" e	15' 1" i	13' 9" i	11' 4" i
800S300-68	50	15' 4"	13' 11"	11' 6" e	16' 3" i	14' 1" i	11' 6" i	14' 0"	12' 8"	11' 0" e	15' 7" i	14' 1" i	11' 6" i
800S162-97	33	15' 0"	13' 8"	11' 9" e	16' 8" i	14' 5" i	11' 9" i	13' 8"	12' 5"	10' 10"	15' 4" i	13' 11" i	11' 9" i
800S162-97	50	15' 0"	13' 8"	11' 11"	16' 11" i	15' 4" i	13' 1" i	13' 8"	12' 5"	10' 10"	15' 4"	13' 11" i	12' 2" i
800S200-97	33	15' 9"	14' 4"	12' 5" e	17' 7" i	15' 3" i	12' 5" i	14' 4"	13' 0"	11' 4"	16' 1" i	14' 7" i	12' 5" i
800S200-97	50	15' 9"	14' 4"	12' 6"	17' 8"	16' 1" i	14' 1" i	14' 4"	13' 0"	11' 4"	16' 1"	14' 7"	12' 9" i
800S250-97	33	16' 6"	15' 0"	13' 0" e	18' 4" i	15' 11" i	13' 0" i	15' 0"	13' 7"	11' 11" e	16' 10" i	15' 3" i	13' 0" i
800S250-97	50	16' 6"	15' 0"	13' 1"	18' 6"	16' 10" i	14' 8" i	15' 0"	13' 7"	11' 11"	16' 10"	15' 3" i	13' 4" i
800S300-97	50	17' 2"	15' 7"	13' 7"	19' 3" i	17' 6" i	14' 8" i	15' 7"	14' 2"	12' 4"	17' 6"	15' 11" i	13' 10" i
1000S162-43	33	10' 4" e	8' 11" e	6' 0" e	8' 10" a	7' 0" a	4' 9" a	10' 4" e	8' 11" e	6' 0" e	8' 10" a	7' 0" a	4' 9" a
1000S200-43	33	11' 2" e	8' 11" e	6' 0" e	9' 0" a	7' 2" a	4' 9" a	11' 2" e	8' 11" e	6' 0" e	9' 0" a	7' 2" a	4' 9" a
1000S250-43	33	11' 6" e	8' 11" e	6' 0" e	9' 3" a	7' 2" a	4' 9" a	11' 6" e	8' 11" e	6' 0" e	9' 3" a	7' 2" a	4' 9" a
1000S162-54	33	12' 2" e	10' 6" e	8' 7" e	12' 2" a	10' 6" a	7' 11" a	12' 2" e	10' 6" e	8' 7" e	12' 2" a	10' 6" a	7' 11" a
1000S162-54	50	13' 10" e	12' 0" e	9' 10" e	13' 10" i	11' 8" i	8' 7" a	13' 7" e	12' 0" e	9' 10" e	13' 10" i	11' 8" i	8' 7" a
1000S200-54	33	13' 1" e	11' 4" e	9' 3" e	13' 1" a	11' 1" a	8' 3" a	13' 1" e	11' 4" e	9' 3" e	13' 1" a	11' 1" a	8' 3" a
1000S200-54	50	14' 11" e	12' 11" e	10' 6" e	14' 8" i	11' 11" i	8' 9" a	14' 2" e	12' 10" e	10' 6" e	14' 8" i	11' 11" i	8' 9" a
1000S250-54	33	13' 5" e	11' 8" e	9' 6" e	13' 5" a	11' 6" a	8' 6" a	13' 5" e	11' 8" e	9' 6" e	13' 5" a	11' 6" a	8' 6" a
1000S250-54	50	15' 4" e	13' 3" e	10' 10" e	15' 1" i	12' 2" a	8' 11" a	14' 11" e	13' 3" e	10' 10" e	15' 1" i	12' 2" a	8' 11" a
1000S300-54	50	15' 6" e	13' 5" e	11' 0" e	15' 1" i	12' 3" a	9' 0" a	15' 4" e	13' 5" e	11' 0" e	15' 1" i	12' 3" a	9' 0" a
1000S162-68	33	14' 4" e	12' 5" e	10' 1" e	14' 4" i	12' 5" a	10' 1" a	14' 4" e	12' 5" e	10' 1" e	14' 4" i	12' 5" a	10' 1" a
1000S162-68	50	16' 2"	14' 2" e	11' 7" e	16' 5" i	14' 2" i	11' 7" i	14' 9"	13' 5"	11' 7" e	16' 5" i	14' 2" i	11' 7" i
1000S200-68	33	15' 3" e	13' 3" e	10' 10" e	15' 3" i	13' 3" a	10' 10" a	15' 3" e	13' 3" e	10' 10" e	15' 3" i	13' 3" a	10' 10" a
1000S200-68	50	16' 11"	15' 2" e	12' 5" e	17' 6" i	15' 2" i	12' 5" a	15' 5"	14' 0" e	12' 2" e	17' 3" i	15' 2" i	12' 5" a
1000S250-68	33	16' 3" e	14' 1" e	11' 6" e	16' 3" a	14' 1" a	11' 6" a	16' 1" e	14' 1" e	11' 6" e	16' 3" a	14' 1" a	11' 6" a
1000S250-68	50	17' 8"	15' 7" e	12' 9" e	18' 0" i	15' 7" i	12' 9" a	16' 1"	14' 7" e	12' 9" e	18' 0" i	15' 7" i	12' 9" a
1000S300-68	50	18' 3"	15' 10" e	12' 11" e	18' 4" i	15' 10" i	12' 11" a	16' 7"	15' 1" e	12' 11" e	18' 4" i	15' 10" i	12' 11" a
1000S162-97	33	17' 10"	15' 6"	12' 8" e	17' 10" i	15' 6" i	12' 8" i	16' 5"	14' 11"	12' 8" e	17' 10" i	15' 6" i	12' 8" i
1000S162-97	50	18' 1"	16' 5"	14' 4"	20' 4" i	18' 2" i	14' 10" i	16' 5"	14' 11"	13' 1"	18' 6" i	16' 9" i	14' 8" i
1000S200-97	33	18' 11"	16' 6"	13' 6" e	19' 1" i	16' 6" i	13' 6" i	17' 2"	15' 7"	13' 6" e	19' 1" i	16' 6" i	13' 6" i
1000S200-97	50	18' 11"	17' 2"	15' 0"	21' 3" i	19' 3" i	15' 9" i	17' 2"	15' 7"	13' 8"	19' 3" i	17' 6" i	15' 4" i
1000S250-97	33	19' 8"	17' 11" e	14' 9" e	20' 11" i	18' 1" i	14' 9" i	17' 11"	16' 3"	14' 2" e	20' 1" i	18' 1" i	14' 9" i
1000S250-97	50	19' 8"	17' 11"	15' 8"	22' 1" i	20' 1" i	16' 11" i	17' 11"	16' 3"	14' 2"	20' 1"	18' 3" i	15' 11" i
1000S300-97	50	20' 5"	18' 7"	16' 2"	22' 11" i	20' 4" i	16' 7" i	18' 7"	16' 10"	14' 9"	20' 10" i	18' 11" i	16' 6" i
1200S162-54	33	13' 2" e	11' 5" e	9' 4" e	12' 9" a	10' 4" a	7' 6" a	13' 2" e	11' 5" e	9' 4" e	12' 9" a	10' 4" a	7' 6" a
1200S162-54	50	14' 11" e	12' 11" e	9' 10" e	13' 10" a	11' 1" a	7' 10" a	14' 11" e	12' 11" e	9' 10" e	13' 10" a	11' 1" a	7' 10" a
1200S200-54	33	14' 3" e	12' 4" e	9' 10" e	13' 3" a	10' 8" a	7' 9" a	14' 3" e	12' 4" e	9' 10" e	13' 3" a	10' 8" a	7' 9" a
1200S200-54	50	16' 2" e	14' 0" e	9' 10" e	14' 1" a	11' 3" a	7' 10" a	16' 2" e	14' 0" e	9' 10" e	14' 1" a	11' 3" a	7' 10" a
1200S250-54	33	14' 9" e	12' 9" e	9' 10" e	13' 4" a	10' 9" a	7' 9" a	14' 9" e	12' 9" e	9' 10" e	13' 4" a	10' 9" a	7' 9" a
1200S250-54	50	16' 8" e	14' 5" e	9' 10" e	14' 3" a	11' 4" a	7' 10" a	16' 8" e	14' 5" e	9' 10" e	14' 3" a	11' 4" a	7' 10" a
1200S300-54	50	17' 0" e	14' 9" e	9' 10" e	14' 5" a	11' 6" a	7' 10" a	17' 0" e	14' 9" e	9' 10" e	14' 5" a	11' 6" a	7' 10" a
1200S162-68	33	15' 7" e	13' 6" e	11' 0" e	15' 7" a	13' 6" a	11' 0" a	15' 7" e	13' 6" e	11' 0" e	15' 7" a	13' 6" a	11' 0" a
1200S162-68	50	17' 9" e	15' 4" e	12' 7" e	17' 9" i	15' 4" i	12' 7" a	17' 0"	15' 4" e	12' 7" e	17' 9" i	15' 4" i	12' 7" a
1200S200-68	33	16' 9" e	14' 6" e	11' 10" e	16' 9" a	14' 6" a	11' 10" a	16' 9" e	14' 6" e	11' 10" e	16' 9" a	14' 6" a	11' 10" a
1200S200-68	50	19' 1" e	16' 6" e	13' 6" e	19' 1" i	16' 6" i	13' 0" a	17' 9" e	16' 1" e	13' 6" e	19' 1" i	16' 6" i	13' 0" a
1200S250-68	33	17' 4" e	15' 0" e	12' 3" e	17' 4" a	15' 0" a	12' 1" a	17' 4" e	15' 0" e	12' 3" e	17' 4" a	15' 0" a	12' 1" a
1200S250-68	50	19' 9" e	17' 1" e	13' 11" e	19' 9" i	17' 1" i	13' 1" a	18' 5" e	16' 9" e	13' 11" e	19' 9" i	17' 1" i	13' 1" a
1200S300-68	50	20' 1" e	17' 5" e	14' 3" e	20' 1" i	17' 5" i	13' 5" a	19' 2" e	17' 5" e	14' 3" e	20' 1" i	17' 5" i	13' 5" a
1200S162-97	33	20' 0"	17' 4" e	14' 2" e	20' 0" i	17' 4" i	14' 2" i	19' 2"	17' 4" e	14' 2" e	20' 0" i	17' 4" i	14' 2" i
1200S162-97	50	21' 2"	19' 2"	16' 3"	23' 0" i	19' 11" i	16' 3" i	19' 2"	17' 5"	15' 3"	21' 7" i	19' 7" i	16' 3" i
1200S200-97	33	21' 4"	18' 6" e	15' 1" e	21' 4" i	18' 6" i	15' 1" a	20' 0"	18' 2" e	15' 1" e	21' 4" i	18' 6" i	15' 1" a
1200S200-97	50	22' 0"	20' 0"	17' 5" e	24' 7" i	21' 3" i	17' 5" i	20' 0"	18' 2"	15' 10"	22' 5" i	20' 5" i	17' 5" i
1200S250-97	33	22' 1"	19' 2" e	15' 7" e	22' 1" i	19' 2" i	15' 7" a	20' 9"	18' 10" e	15' 7" e	22' 1" i	19' 2" i	15' 7" a
1200S250-97	50	22' 10"	20' 9"	17' 11" e	25' 5" i	22' 0" i	17' 11" i	20' 9"	18' 10"	16' 6"	23' 3" i	21' 2" i	17' 11" i
1200S300-97	50	23' 7"	21' 5"	18' 4" e	25' 11" i	22' 5" i	18' 4" i	21' 5"	19' 6"	17' 0" e	24' 1" i	21' 11" i	18' 4" i
1400S162-54	33	13' 11" e	12' 1" e	8' 5" e	12' 3" a	9' 10" a	6' 9" a	13' 11" e	12' 1" e	8' 5" e	12' 3" a	9' 10" a	6' 9" a
1400S162-54	50	15' 9" e	12' 7" e	8' 5" e	13' 2" a	10' 1" a	6' 9" a	15' 9" e	12' 7" e	8' 5" e	13' 2" a	10' 1" a	6' 9" a
1400S200-54	33	15' 2" e	12' 7" e	8' 5" e	12' 8" a	10' 1" a	6' 9" a	15' 2" e	12' 7" e	8' 5" e	12' 8" a	10' 1" a	6' 9" a
1400S200-54	50	16' 10" e	12' 7" e	8' 5" e	13' 4" a	10' 1" a	6' 9" a	16' 10" e	12' 7" e	8' 5" e	13' 4" a	10' 1" a	6' 9" a
1400S250-54	33	15' 9" e	12' 7" e	8' 5" e	12' 9" a	10' 1" a	6' 9" a	15' 9" e	12' 7" e	8' 5" e	12' 9" a	10' 1" a	6' 9" a
1400S250-54	50	16' 10" e	12' 7" e	8' 5" e	13' 5" a	10' 1" a	6' 9" a	16' 10" e	12' 7" e	8' 5" e	13' 5" a	10' 1" a	6' 9" a
1400S300-54	50	16' 10" e	12' 7" e	8' 5" e	13' 5" a	10' 1" a	6' 9" a	16' 10" e	12' 7" e	8' 5" e	13' 5" a	10' 1" a	6' 9" a
1400S162-68	33	16' 7" e	14' 5" e	11' 9" e	16' 7" a	14' 5" a	11' 2" a	16' 7" e	14' 5" e	11' 9" e	16' 7" a	14' 5" a	11' 2" a
1400S162-68	50	18' 10" e	16' 4" e	13' 4" e	18' 10" i	16' 4" i	12' 2" a	18' 10" e	16' 4" e	13' 4" e	18' 10" i	16' 4" i	12' 2" a
1400S200-68	33	17' 11" e	15' 6" e	12' 8" e	17' 11" a	15' 6" a	11' 7" a	17' 11" e	15' 6" e	12' 8" e	17' 11" a	15' 6" a	11' 7" a
1400S200-68	50	20' 4" e	17' 8" e	14' 5" e	20' 4" i	17' 0" i	12' 6" a	20' 0" e	17' 8" e	14' 5" e	20' 4" i	17' 0" i	12' 6" a
1400S250-68	33	18' 7" e	16' 2" e	13' 2" e	18' 7" a	15' 10" a	11' 9" a	18' 7" e	16' 2" e	13' 2" e	18' 7" a	15' 10" a	11' 9" a
1400S250-68	50	21' 2" e	18' 4" e	14' 11" e	21' 0" i	17' 1" i	12' 6" a	20' 9" e	18' 4" e	14' 11" e	21' 0" i	17' 1" i	12' 6" a
1400S300-68	50	21' 8" e	18' 9" e	15' 4" e	21' 2" i	17' 2" a	12' 7" a	21' 4" e	18' 9" e	15' 4" e	21' 2" i	17' 2" a	12' 7" a
1400S162-97	33	21' 7"	18' 8" e	15' 3" e	21' 7" i	18' 8" i	15' 3" a	21' 7"	18' 8" e	15' 3" e	21' 7" i	18' 8" i	15' 3" a
1400S162-97	50	24' 0"	21' 5"	17' 5" e	24' 8" i	21' 5" i	17' 5" i	21' 11"	19' 10"	17' 3" e	24' 5" i	21' 5" i	17' 5" i
1400S200-97	33	23' 1" e	20' 0" e	16' 4" e	23' 1" i	20' 0" i	16' 4" a	22' 9" e	20' 0" e	16' 4" e	23' 1" i	20' 0" i	16' 4" a
1400S200-97	50	24' 11"	22' 7"	18' 8" e	26' 5" i	22' 11" i	18' 8" i	22' 9"	20' 8"	18' 0" e	25' 5" i	22' 11" i	18' 8" i
1400S250-97	33	24' 0" e	20' 9" e	16' 11" e	24' 0" i	20' 9" i	16' 11" a	23' 7" e	20' 9" e	16' 11" e	24' 0" i	20' 9" i	16' 11" a
1400S250-97	50	25' 10"	23' 5"	19' 5" e	27' 5" i	23' 9" i	19' 5" i	23' 7"	21' 4"	18' 8" e	26' 4" i	23' 9" i	19' 5" i
1400S300-97	50	26' 8"	24' 3"	19' 10" e	28' 1" i	24' 4" i	19' 10" i	24' 4"	22' 1"	19' 3" e	27' 3" i	24' 4" i	19' 10" i

40 PSF DEAD LOAD AND 125 PSF LIVE LOAD

		L/360 Live Load Deflection						L/480 Live Load Deflection					
Section	Fy(ksi)	Single Span Spacing (in) 16			Two Equal Spans Spacing (in)			Single Span Spacing (in)			Two Equal Spans Spacing (in)		
600S162-33	33	6' 2" e	5' 4" e	3' 10" e	5' 7" a	4' 5" a	3' 1" a	6' 2" e	5' 4" e	3' 10" e	5' 7" a	4' 5" a	3' 1" a
600S200-33	33	6' 7" e	5' 9" e	3' 10" e	5' 8" a	4' 6" a	3' 1" a	6' 7" e	5' 9" e	3' 10" e	5' 8" a	4' 6" a	3' 1" a
600S162-43	33	7' 8" e	6' 7" e	5' 5" e	7' 8" a	6' 7" a	5' 1" a	7' 8" e	6' 7" e	5' 5" e	7' 8" a	6' 7" a	5' 1" a
600S200-43	33	7' 11" e	6' 10" e	5' 7" e	7' 11" a	6' 10" a	5' 1" a	7' 11" e	6' 10" e	5' 7" e	7' 11" a	6' 10" a	5' 1" a
600S250-43	33	8' 1" e	7' 0" e	5' 9" e	8' 1" a	7' 0" a	5' 2" a	8' 1" e	7' 0" e	5' 9" e	8' 1" a	7' 0" a	5' 2" a
600S162-54	33	8' 11" e	7' 9" e	6' 4" e	8' 11" i	7' 9" a	6' 4" a	8' 11" e	7' 9" e	6' 4" e	8' 11" i	7' 9" a	6' 4" a
600S162-54	50	10' 0"	8' 10" e	7' 3" e	10' 3" i	8' 10" i	7' 3" i	9' 1"	8' 3"	7' 3" e	10' 2" i	8' 10" i	7' 3" i
600S200-54	33	9' 5" e	8' 2" e	6' 8" e	9' 5" i	8' 2" a	6' 8" a	9' 5" e	8' 2" e	6' 8" e	9' 5" i	8' 2" a	6' 8" a
600S200-54	50	10' 6"	9' 1" e	7' 5" e	10' 6" i	9' 1" i	7' 4" i	9' 7"	8' 8" e	7' 5" e	10' 6" i	9' 1" i	7' 4" i
600S250-54	33	9' 5" e	8' 2" e	6' 8" e	9' 5" i	8' 2" a	6' 8" a	9' 5" e	8' 2" e	6' 8" e	9' 5" i	8' 2" a	6' 8" a
600S250-54	50	10' 9"	9' 4" e	7' 7" e	10' 9" i	9' 4" i	7' 5" a	10' 0"	9' 1" e	7' 7" e	10' 9" i	9' 4" i	7' 5" a
600S300-54	50	10' 11"	9' 6" e	7' 9" e	10' 11" i	9' 6" i	7' 6" a	10' 4"	9' 4" e	7' 9" e	10' 11" i	9' 6" i	7' 6" a
600S162-68	33	10' 5"	9' 0" e	7' 4" e	10' 5" i	9' 0" i	7' 4" a	9' 9"	8' 10" e	7' 4" e	10' 5" i	9' 0" i	7' 4" a
600S162-68	50	10' 9"	9' 9"	8' 6" e	12' 0" i	10' 5" i	8' 6" i	9' 9"	8' 10"	7' 9"	10' 11" i	9' 11" i	8' 6" i
600S200-68	33	11' 0" e	9' 6" e	7' 9" e	11' 0" i	9' 6" i	7' 9" a	10' 3"	9' 4" e	7' 9" e	11' 0" i	9' 6" i	7' 9" a
600S200-68	50	11' 3"	10' 3"	8' 11" e	12' 8" i	11' 0" i	8' 11" i	10' 3"	9' 4"	8' 2"	11' 6" i	10' 5" i	8' 11" i
600S250-68	33	11' 3" e	9' 9" e	8' 0" e	11' 3" i	9' 9" i	8' 0" a	10' 9"	9' 9" e	8' 0" e	11' 3" i	9' 9" i	8' 0" a
600S250-68	50	11' 10"	10' 9"	8' 11" e	12' 7" i	10' 11" i	8' 11" i	10' 9"	9' 9"	8' 6" e	12' 1" i	10' 11" i	8' 11" i
600S300-68	50	12' 3"	11' 1"	9' 1" e	12' 10" i	11' 1" i	9' 1" i	11' 2"	10' 2"	8' 10" e	12' 6" i	11' 1" i	9' 1" i
600S162-97	33	11' 11"	10' 9"	8' 10"	12' 5" i	10' 9" i	8' 8" i	10' 10"	9' 10"	8' 7"	12' 1" i	10' 9" i	8' 8" i
600S162-97	50	11' 11"	10' 10"	9' 5"	13' 4"	12' 1" i	10' 7" i	10' 10"	9' 10"	8' 7"	12' 1"	11' 0"	9' 7" i
600S200-97	33	12' 6"	11' 4"	9' 4"	13' 3" i	11' 6" i	9' 0" i	11' 4"	10' 4"	9' 0"	12' 9" i	11' 6" i	9' 0" i
600S200-97	50	12' 6"	11' 4"	9' 11"	14' 1"	12' 9" i	11' 2" i	11' 4"	10' 4"	9' 0"	12' 9"	11' 7"	10' 2" i
600S250-97	33	13' 2"	11' 11"	9' 11"	14' 1" i	12' 2" i	9' 4" i	11' 11"	10' 10"	9' 6"	13' 5" i	12' 2" i	9' 4" i
600S250-97	50	13' 2"	11' 11"	10' 5"	14' 9" i	13' 5" i	11' 7" i	11' 11"	10' 10"	9' 6"	13' 5"	12' 2" i	10' 8" i
600S300-97	50	13' 9"	12' 6"	10' 11"	15' 5" i	13' 11" i	11' 5" i	12' 6"	11' 4"	9' 11"	14' 0"	12' 9" i	11' 1" i
800S162-33	33	5' 9" e	4' 4" e	2' 10" e	4' 7" a	3' 5" a	2' 4" a	5' 9" e	4' 4" e	2' 10" e	4' 7" a	3' 5" a	2' 4" a
800S200-33	33	5' 9" e	4' 4" e	2' 10" e	4' 7" a	3' 5" a	2' 4" a	5' 9" e	4' 4" e	2' 10" e	4' 7" a	3' 5" a	2' 4" a
800S162-43	33	8' 7" e	7' 5" e	6' 1" e	8' 2" a	6' 8" a	4' 10" a	8' 7" e	7' 5" e	6' 1" e	8' 2" a	6' 8" a	4' 10" a
800S200-43	33	9' 2" e	8' 0" e	6' 4" e	8' 9" a	7' 0" a	5' 1" a	9' 2" e	8' 0" e	6' 4" e	8' 9" a	7' 0" a	5' 1" a
800S250-43	33	9' 5" e	8' 2" e	6' 4" e	8' 9" a	7' 1" a	5' 1" a	9' 5" e	8' 2" e	6' 4" e	8' 9" a	7' 1" a	5' 1" a
800S162-54	33	10' 1" e	8' 8" e	7' 1" e	10' 1" a	8' 8" a	7' 1" a	10' 1" e	8' 8" e	7' 1" e	10' 1" a	8' 8" a	7' 1" a
800S162-54	50	11' 6" e	10' 0" e	8' 2" e	11' 6" i	10' 0" i	8' 0" a	11' 5" e	10' 0" e	8' 2" e	11' 6" i	10' 0" i	8' 0" a
800S200-54	33	11' 1" e	9' 7" e	7' 10" e	11' 1" a	9' 7" a	7' 10" a	11' 1" e	9' 7" e	7' 10" e	11' 1" a	9' 7" a	7' 10" a
800S200-54	50	12' 3" e	10' 8" e	8' 8" e	12' 3" i	10' 8" a	8' 5" a	12' 0" e	10' 8" e	8' 8" e	12' 3" i	10' 8" a	8' 5" a
800S250-54	33	11' 0" e	9' 7" e	7' 10" e	11' 0" a	9' 7" a	7' 9" a	11' 0" e	9' 7" e	7' 10" e	11' 0" a	9' 7" a	7' 9" a
800S250-54	50	12' 7" e	10' 11" e	8' 11" e	12' 7" i	10' 11" a	8' 6" a	12' 6" e	10' 11" e	8' 11" e	12' 7" i	10' 11" a	8' 6" a
800S300-54	50	12' 9" e	11' 0" e	9' 0" e	12' 9" i	11' 0" a	8' 6" a	12' 9" e	11' 0" e	9' 0" e	12' 9" i	11' 0" a	8' 6" a
800S162-68	33	11' 8" e	10' 2" e	8' 3" e	11' 8" i	10' 2" i	8' 3" a	11' 8" e	10' 2" e	8' 3" e	11' 8" i	10' 2" i	8' 3" a
800S162-68	50	13' 6"	11' 8"	9' 7" e	13' 6" i	11' 8" i	9' 7" i	12' 4"	11' 2"	9' 7" e	13' 6" i	11' 8" i	9' 7" i
800S200-68	33	13' 0" e	11' 3" e	9' 2" e	13' 0" i	11' 3" a	9' 2" a	12' 11" e	11' 3" e	9' 2" e	13' 0" i	11' 3" a	9' 2" a
800S200-68	50	14' 2"	12' 10" e	10' 6" e	14' 10" i	12' 10" i	10' 6" i	12' 11"	11' 8"	10' 3" e	14' 5" i	12' 10" i	10' 6" i
800S250-68	33	13' 3" e	11' 6" e	9' 5" e	13' 3" i	11' 6" a	9' 5" a	13' 3" e	11' 6" e	9' 5" e	13' 3" i	11' 6" a	9' 5" a
800S250-68	50	14' 9"	12' 9" e	10' 5" e	14' 9" i	12' 9" i	10' 5" i	13' 5"	12' 3" e	10' 5" e	14' 9" i	12' 9" i	10' 5" i
800S300-68	50	15' 0"	13' 0" e	10' 7" e	15' 0" i	13' 0" i	10' 7" i	13' 11"	12' 7" e	10' 7" e	15' 0" i	13' 0" i	10' 7" i
800S162-97	33	15' 0"	13' 3"	10' 10" e	15' 4" i	13' 3" i	10' 10" i	13' 8"	12' 5"	10' 10" e	15' 4" i	13' 3" i	10' 10" i
800S162-97	50	15' 0"	13' 8"	11' 11"	16' 11" i	14' 9" i	12' 1" i	13' 8"	12' 5"	10' 10"	15' 4" i	13' 3" i	12' 1" i
800S200-97	33	15' 9"	14' 1"	11' 6" e	16' 3" i	14' 1" i	11' 6" i	14' 4"	13' 0"	11' 4" e	16' 1" i	14' 1" i	11' 6" i
800S200-97	50	15' 9"	14' 4"	12' 6"	17' 8" i	16' 1" i	13' 6" i	14' 4"	13' 0"	11' 4"	16' 1"	14' 7" i	12' 9" i
800S250-97	33	16' 6"	14' 8"	11' 11" e	16' 11" i	14' 8" i	11' 11" i	15' 0"	13' 7"	11' 11" e	16' 10" i	14' 8" i	11' 11" i
800S250-97	50	16' 6"	15' 0"	13' 1"	18' 6" i	16' 10" i	13' 9" i	15' 0"	13' 7"	11' 11"	16' 10" i	15' 3" i	13' 4" i
800S300-97	50	17' 2"	15' 7"	13' 6"	19' 1" i	16' 6" i	13' 6" i	15' 7"	14' 2"	12' 4"	17' 6" i	15' 11" i	13' 6" i
1000S162-43	33	9' 6" e	7' 7" e	5' 1" e	7' 9" a	6' 1" a	4' 1" a	9' 6" e	7' 7" e	5' 1" e	7' 9" a	6' 1" a	4' 1" a
1000S200-43	33	10' 2" e	7' 7" e	5' 1" e	7' 11" a	6' 1" a	4' 1" a	10' 2" e	7' 7" e	5' 1" e	7' 11" a	6' 1" a	4' 1" a
1000S250-43	33	10' 2" e	7' 7" e	5' 1" e	8' 1" a	6' 1" a	4' 1" a	10' 2" e	7' 7" e	5' 1" e	8' 1" a	6' 1" a	4' 1" a
1000S162-54	33	11' 3" e	9' 9" e	7' 11" e	11' 3" a	9' 5" a	7' 0" a	11' 3" e	9' 9" e	7' 11" e	11' 3" a	9' 5" a	7' 0" a
1000S162-54	50	12' 9" e	11' 1" e	9' 0" e	12' 9" i	10' 4" a	7' 7" a	12' 9" e	11' 1" e	9' 0" e	12' 9" i	10' 4" a	7' 7" a
1000S200-54	33	12' 0" e	10' 5" e	8' 6" e	12' 0" a	9' 10" a	7' 3" a	12' 0" e	10' 5" e	8' 6" e	12' 0" a	9' 10" a	7' 3" a
1000S200-54	50	13' 9" e	11' 11" e	9' 8" e	13' 9" i	10' 6" a	7' 8" a	13' 9" e	11' 11" e	9' 8" e	13' 0" i	10' 6" a	7' 8" a
1000S250-54	33	12' 5" e	10' 9" e	8' 9" e	12' 5" a	10' 2" a	7' 6" a	12' 5" e	10' 9" e	8' 9" e	12' 5" a	10' 2" a	7' 6" a
1000S250-54	50	14' 1" e	12' 2" e	10' 0" e	13' 4" i	10' 9" a	7' 10" a	14' 1" e	12' 2" e	10' 0" e	13' 4" i	10' 9" a	7' 10" a
1000S300-54	50	14' 4" e	12' 5" e	10' 1" e	13' 5" i	10' 10" a	7' 10" a	14' 4" e	12' 5" e	10' 1" e	13' 5" i	10' 10" a	7' 10" a
1000S162-68	33	13' 2" e	11' 5" e	9' 4" e	13' 2" i	11' 5" a	9' 4" a	13' 2" e	11' 5" e	9' 4" e	13' 2" i	11' 5" a	9' 4" a
1000S162-68	50	15' 1"	13' 1" e	10' 8" e	15' 1" i	13' 1" i	10' 8" a	14' 8"	13' 1" e	10' 8" e	15' 1" i	13' 1" i	10' 8" a
1000S200-68	33	14' 1" e	12' 2" e	9' 11" e	14' 1" a	12' 2" a	9' 11" a	14' 1" e	12' 2" e	9' 11" e	14' 1" a	12' 2" a	9' 11" a
1000S200-68	50	16' 2" e	14' 0" e	11' 5" e	16' 2" i	14' 0" i	11' 5" a	15' 4"	13' 11" e	11' 5" e	16' 2" i	14' 0" i	11' 5" a
1000S250-68	33	15' 0" e	13' 0" e	10' 7" e	15' 0" a	13' 0" a	10' 7" a	15' 0" e	13' 0" e	10' 7" e	15' 0" a	13' 0" a	10' 7" a
1000S250-68	50	16' 7" e	14' 4" e	11' 9" e	16' 7" i	14' 4" i	11' 9" a	16' 1" e	14' 4" e	11' 9" e	16' 7" i	14' 4" i	11' 9" a
1000S300-68	50	16' 10" e	14' 7" e	11' 11" e	16' 10" i	14' 7" i	11' 11" a	16' 7" e	14' 7" e	11' 11" e	16' 10" i	14' 7" i	11' 11" a
1000S162-97	33	16' 6"	14' 3"	11' 8" e	16' 6" i	14' 3" i	11' 8" i	16' 5"	14' 3"	11' 8" e	16' 6" i	14' 3" i	11' 8" i
1000S162-97	50	18' 1"	16' 5"	13' 8"	19' 4" i	16' 9" i	13' 8" i	16' 5"	14' 11"	13' 1"	18' 6" i	16' 9" i	13' 8" i
1000S200-97	33	17' 7"	15' 3" e	12' 5" e	17' 7" i	15' 3" i	12' 5" i	17' 2"	15' 3" e	12' 5" e	17' 7" i	15' 3" i	12' 5" i
1000S200-97	50	18' 11"	17' 2"	14' 7"	20' 7" i	17' 10" i	14' 7" i	17' 2"	15' 7"	13' 8"	19' 3" i	17' 6" i	14' 7" i
1000S250-97	33	19' 3"	16' 8" e	13' 7" e	19' 3" i	16' 8" i	13' 7" a	17' 11"	16' 3" e	13' 7" e	19' 3" i	16' 8" i	13' 7" a
1000S250-97	50	19' 8"	17' 11"	15' 7" e	22' 0" i	19' 1" i	15' 7" i	17' 11"	16' 3"	14' 2"	20' 1" i	18' 3" i	15' 7" i
1000S300-97	50	20' 5"	18' 7"	15' 3" e	21' 7" i	18' 9" i	15' 3" i	18' 7"	16' 10"	14' 9" e	20' 10" i	18' 9" i	15' 3" i
1200S162-54	33	12' 1" e	10' 6" e	8' 4" e	11' 4" a	9' 1" a	6' 7" a	12' 1" e	10' 6" e	8' 4" e	11' 4" a	9' 1" a	6' 7" a
1200S162-54	50	13' 9" e	11' 11" e	8' 4" e	12' 2" a	9' 9" a	6' 8" a	13' 9" e	11' 11" e	8' 4" e	12' 2" a	9' 9" a	6' 8" a
1200S200-54	33	13' 1" e	11' 4" e	8' 4" e	11' 8" a	9' 5" a	6' 8" a	13' 1" e	11' 4" e	8' 4" e	11' 8" a	9' 5" a	6' 8" a
1200S200-54	50	14' 10" e	12' 6" e	8' 4" e	12' 5" a	9' 11" a	6' 8" a	14' 10" e	12' 6" e	8' 4" e	12' 5" a	9' 11" a	6' 8" a
1200S250-54	33	13' 7" e	11' 9" e	8' 4" e	11' 9" a	9' 5" a	6' 8" a	13' 7" e	11' 9" e	8' 4" e	11' 9" a	9' 5" a	6' 8" a
1200S250-54	50	15' 4" e	12' 6" e	8' 4" e	12' 1" a	10' 0" a	6' 8" a	15' 4" e	12' 6" e	8' 4" e	12' 6" a	10' 0" a	6' 8" a
1200S300-54	50	15' 8" e	12' 6" e	8' 4" e	12' 8" a	10' 0" a	6' 8" a	15' 8" e	12' 6" e	8' 4" e	12' 8" a	10' 0" a	6' 8" a
1200S162-68	33	14' 4" e	12' 5" e	10' 2" e	14' 4" a	12' 5" a	10' 1" a	14' 4" e	12' 5" e	10' 2" e	14' 4" a	12' 5" a	10' 1" a
1200S162-68	50	16' 4" e	14' 2" e	11' 7" e	16' 4" i	14' 2" i	11' 2" a	16' 4" e	14' 2" e	11' 7" e	16' 4" i	14' 2" i	11' 2" a
1200S200-68	33	15' 5" e	13' 4" e	10' 11" e	15' 5" a	13' 4" a	10' 6" a	15' 5" e	13' 4" e	10' 11" e	15' 5" a	13' 4" a	10' 6" a
1200S200-68	50	17' 7" e	15' 3" e	12' 5" e	17' 7" i	15' 3" a	11' 6" a	17' 7" e	15' 3" e	12' 5" e	17' 7" i	15' 3" a	11' 6" a
1200S250-68	33	15' 11" e	13' 10" e	11' 3" e	15' 11" a	13' 10" a	10' 9" a	15' 11" e	13' 10" e	11' 3" e	15' 11" a	13' 10" a	10' 9" a
1200S250-68	50	18' 2" e	15' 9" e	12' 10" e	18' 2" i	15' 6" a	11' 7" a	18' 2" e	15' 9" e	12' 10" e	18' 2" i	15' 6" a	11' 7" a
1200S300-68	50	18' 6" e	16' 0" e	13' 1" e	18' 6" i	16' 0" a	11' 10" a	18' 6" e	16' 0" e	13' 1" e	18' 6" i	16' 0" a	11' 10" a
1200S162-97	33	18' 5"	15' 11" e	13' 0" e	18' 5" i	15' 11" i	13' 0" a	18' 5"	15' 11" e	13' 0" e	18' 5" i	15' 11" i	13' 0" a
1200S162-97	50	21' 1"	18' 4"	15' 0" e	21' 2" i	18' 4" i	15' 0" i	19' 2"	17' 5"	15' 0" e	21' 2" i	18' 4" i	15' 0" i
1200S200-97	33	19' 8" e	17' 0" e	13' 11" e	19' 8" i	17' 0" i	13' 11" a	19' 8" e	17' 0" e	13' 11" e	19' 8" i	17' 0" i	13' 11" a
1200S200-97	50	22' 0"	19' 7"	16' 0" e	22' 8" i	19' 7" i	16' 0" i	20' 0"	18' 2"	15' 10" e	22' 5" i	19' 7" i	16' 0" i
1200S250-97	33	20' 4" e	17' 8" e	14' 5" e	20' 4" i	17' 8" i	14' 5" a	20' 4" e	17' 8" e	14' 5" e	20' 4" i	17' 8" i	14' 5" a
1200S250-97	50	22' 10"	20' 3"	16' 6" e	23' 5" i	20' 3" i	16' 6" i	20' 9"	18' 10"	16' 6" e	23' 3" i	20' 3" i	16' 6" i
1200S300-97	50	23' 7"	20' 8"	16' 11" e	23' 10" i	20' 8" i	16' 11" i	21' 5"	19' 6"	16' 11" e	23' 10" i	20' 8" i	16' 11" i
1400S162-54	33	12' 10" e	10' 8" e	7' 2" e	10' 10" a	8' 7" a	5' 8" a	12' 10" e	10' 8" e	7' 2" e	10' 10" a	8' 7" a	5' 8" a
1400S162-54	50	14' 3" e	10' 8" e	7' 2" e	11' 5" a	8' 7" a	5' 8" a	14' 3" e	10' 8" e	7' 2" e	11' 5" a	8' 7" a	5' 8" a
1400S200-54	33	13' 11" e	10' 8" e	7' 2" e	11' 2" a	8' 7" a	5' 8" a	13' 11" e	10' 8" e	7' 2" e	11' 2" a	8' 7" a	5' 8" a
1400S200-54	50	14' 3" e	10' 8" e	7' 2" e	11' 5" a	8' 7" a	5' 8" a	14' 3" e	10' 8" e	7' 2" e	11' 5" a	8' 7" a	5' 8" a
1400S250-54	33	14' 3" e	10' 8" e	7' 2" e	11' 2" a	8' 7" a	5' 8" a	14' 3" e	10' 8" e	7' 2" e	11' 2" a	8' 7" a	5' 8" a
1400S250-54	50	14' 3" e	10' 8" e	7' 2" e	11' 5" a	8' 7" a	5' 8" a	14' 3" e	10' 8" e	7' 2" e	11' 5" a	8' 7" a	5' 8" a
1400S300-54	50	14' 3" e	10' 8" e	7' 2" e	11' 5" a	8' 7" a	5' 8" a	14' 3" e	10' 8" e	7' 2" e	11' 5" a	8' 7" a	5' 8" a
1400S162-68	33	15' 4" e	13' 3" e	10' 10" e	15' 4" a	13' 3" a	9' 11" a	15' 4" e	13' 3" e	10' 10" e	15' 4" a	13' 3" a	9' 11" a
1400S162-68	50	17' 4" e	15' 0" e	12' 3" e	17' 4" i	14' 7" a	10' 9" a	17' 4" e	15' 0" e	12' 3" e	17' 4" i	14' 7" a	10' 9" a
1400S200-68	33	16' 6" e	14' 4" e	11' 8" e	16' 6" a	13' 9" a	10' 2" a	16' 6" e	14' 4" e	11' 8" e	16' 6" a	13' 9" a	10' 2" a
1400S200-68	50	18' 9" e	16' 3" e	13' 3" e	18' 7" i	15' 0" a	11' 0" a	18' 9" e	16' 3" e	13' 3" e	18' 7" i	15' 0" a	11' 0" a
1400S250-68	33	17' 2" e	14' 10" e	12' 2" e	17' 2" a	14' 1" a	10' 5" a	17' 2" e	14' 10" e	12' 2" e	17' 2" a	14' 1" a	10' 5" a
1400S250-68	50	19' 6" e	16' 10" e	13' 9" e	18' 8" i	15' 1" a	11' 0" a	19' 6" e	16' 10" e	13' 9" e	18' 8" i	15' 1" a	11' 0" a
1400S300-68	50	19' 11" e	17' 3" e	14' 1" e	18' 10" i	15' 2" a	11' 1" a	19' 11" e	17' 3" e	14' 1" e	18' 10" i	15' 2" a	11' 1" a
1400S162-97	33	19' 10" e	17' 2" e	14' 1" e	19' 10" i	17' 2" i	14' 1" a	19' 10" e	17' 2" e	14' 1" e	19' 10" i	17' 2" i	14' 1" a
1400S162-97	50	22' 9"	19' 8"	16' 1" e	22' 9" i	19' 8" i	16' 1" i	21' 10"	19' 8"	16' 1" e	22' 9" i	19' 8" i	16' 1" i
1400S200-97	33	21' 3" e	18' 5" e	15' 0" e	21' 3" i	18' 5" a	15' 0" a	21' 3" e	18' 5" e	15' 0" e	21' 3" i	18' 5" a	15' 0" a
1400S200-97	50	24' 4"	21' 1" e	17' 3" e	24' 4" i	21' 1" i	17' 3" i	22' 8"	20' 7"	17' 3" e	24' 4" i	21' 1" i	17' 3" i
1400S250-97	33	22' 1" e	19' 1" e	15' 7" e	22' 1" i	19' 1" a	15' 7" a	22' 1" e	19' 1" e	15' 7" e	22' 1" i	19' 1" a	15' 7" a
1400S250-97	50	25' 3"	21' 11" e	17' 10" e	25' 3" i	21' 11" i	17' 10" i	23' 6"	21' 4" e	17' 10" e	25' 3" i	21' 11" i	17' 10" i
1400S300-97	50	25' 10"	22' 5" e	18' 3" e	25' 10" i	22' 5" i	18' 3" i	24' 3"	22' 0" e	18' 3" e	25' 10" i	22' 5" i	18' 3" i

Allowable Floor Joist Span Table Notes

1. Spans are based on continuous support of each flange over the full length of the joist.
2. For two, equal spans listed span is the distance from either end to the center support, with the joist continuous over the center support.
3. Joists must be braced against rotation at all supports.
4. Shear and web crippling capacity have not been reduced for punchouts.
5. End web crippling check based on 3.5 inch end bearing. Where listed allowable spans are followed by "e", web stiffeners are required at ends.
6. Web crippling at mid support based on 3.5 inch interior bearing. Where listed allowable spans are followed by "i", web stiffeners are requried at mid support.
7. Where listed allowable spans are followed by "a", web stiffeners are required at end and mid support.
8. Total load deflection limited to L/240. Live load deflection limit as noted.
9. Alternate span live loading has been considered for two, equal span condition.
10. For distortional buckling allowable moment, kf = 0.
11. Moment of inertia for deflection is calculated at the maximum service level stress for the span listed. Note that this value may be higher than the effective Ixx listed in section property tables.

TELLING HEADER DATA TABLES

Header Load Tables

Allowable Uniform Loads in Lbs./Ft.

Section	Fy (ksi)	Span (ft) 3	4	5	6	8	10	12
550S162-33	33	931.4e	698.5e	460.1e	319.5e	179.7e	115.0e	73.8e
550S162-43	33	1946.5e	1094.9e	700.8e	486.6e	273.7e	164.6e	95.3e
550S162-54	33	2647.9e	1489.4e	953.2e	662.0e	372.4e	203.2e	117.6
550S162-54	50	3484.7e	1960.1e	1254.5e	871.2e	396.8e	203.2	117.6
550S162-68	33	3514.1e	1976.7e	1265.1e	878.5e	488.5e	250.1e	144.7
550S162-68	50	4782.6e	2690.2e	1721.7e	1157.8e	488.5e	250.1	144.7
600S137-33	33	850.8e	638.1e	436.5e	303.1e	170.5e	109.1e	75.8e
600S162-33	33	850.8e	638.1e	504.9e	350.6e	197.2e	126.2e	87.6e
600S200-33	33	850.8e	638.1e	510.5e	398.7e	224.2e	143.5e	99.7e
600S137-43	33	1751.1e	985.0e	630.4e	437.8e	246.3e	157.6e	103.2e
600S162-43	33	1887.6e	1205.1e	771.3e	535.6e	301.3e	192.8e	117.1e
600S200-43	33	1887.6e	1282.4e	820.7e	569.9e	320.6e	205.2e	135.7e
600S250-43	33	1887.6e	1350.7e	864.4e	600.3e	337.7e	216.1e	150.1e
600S137-54	33	2362.9e	1329.1e	850.6e	590.7e	332.3e	212.7e	127.3
600S137-54	50	3146.8e	1770.1e	1132.9e	786.7e	429.8e	220.1	127.3
600S162-54	33	2925.9e	1645.8e	1053.3e	731.5e	411.5e	250.0e	144.7e
600S162-54	50	3763.8e	2158.3e	1381.3e	959.3e	488.3e	250.0e	144.7
600S200-54	33	3270.3e	1839.5e	1177.3e	817.6e	459.9e	290.1e	167.9e
600S200-54	50	3763.8e	2281.9e	1460.4e	1014.2e	566.7e	290.1e	167.9
600S250-54	33	3244.0e	1824.8e	1167.8e	811.0e	456.2e	292.0e	193.2e
600S250-54	50	3763.8e	2392.7e	1531.4e	1063.4e	598.2e	329.1e	190.5
600S300-54	33	3377.6e	1899.9e	1215.9e	844.4e	475.0e	304.0e	211.1e
600S300-54	50	3763.8e	2468.6e	1579.9e	1097.1e	617.1e	350.9e	203.1e
600S137-68	33	3562.8e	2004.1e	1282.6e	890.7e	501.0e	270.5e	156.5
600S137-68	50	4280.5e	2407.8e	1541.0e	1070.1e	528.3e	270.5	156.5
600S162-68	33	3968.2e	2232.1e	1428.5e	992.0e	558.0e	308.1e	178.3
600S162-68	50	5288.3e	2974.7e	1903.8e	1322.1e	601.7e	308.1	178.3
600S200-68	33	4439.7e	2497.3e	1598.3e	1109.9e	624.3e	358.4e	207.4e
600S200-68	50	5880.1e	3307.5e	2116.8e	1470.0e	700.0e	358.4	207.4
600S250-68	33	4667.3e	2625.4e	1680.2e	1166.8e	656.3e	413.2e	239.1e
600S250-68	50	5788.2e	3255.8e	2083.7e	1447.0e	806.3e	412.8e	238.9
600S300-68	33	4575.3e	2573.6e	1647.1e	1143.8e	643.4e	411.8e	270.3e
600S300-68	50	6004.1e	3377.3e	2161.5e	1501.0e	844.3e	456.3e	264.1
600S137-97	33	5108.5e	2873.5e	1839.1e	1277.1e	715.0e	366.1	211.8
600S137-97	50	7526.5e	4233.7e	2709.5e	1694.8e	715	366.1	211.8
600S162-97	33	5685.0e	3197.8e	2046.6e	1421.2e	799.5e	419.3	242.7
600S162-97	50	8403.7e	4727.1e	3025.3e	1941.3e	819	419.3	242.7
600S200-97	33	6443.5e	3624.5e	2319.7e	1610.9e	906.1e	490.5e	283.9
600S200-97	50	9432.6e	5305.9e	3395.7e	2270.9e	958.0e	490.5	283.9
600S250-97	33	7230.4e	4067.1e	2603.0e	1807.6e	1016.8e	567.8e	328.6
600S250-97	50	9898.1e	5567.7e	3563.3e	2474.5e	1109.0e	567.8	328.6
600S300-97	33	7714.5e	4339.4e	2777.2e	1928.6e	1084.8e	645.1e	373.3
600S300-97	50	9580.9e	5389.2e	3449.1e	2395.2e	1242.8e	636.3	368.2
800S137-33	33	632.0e	474.0e	379.2e	316.0e	223.2e	142.8e	99.2e
800S162-33	33	632.0e	474.0e	379.2e	316.0e	237.0e	168.1e	116.7e
800S200-33	33	632.0e	474.0e	379.2e	316.0e	237.0e	189.6e	134.5e
800S137-43	33	1401.5e	1051.2e	840.9e	584.3e	328.7e	210.3e	146.1e
800S162-43	33	1401.5e	1051.2e	840.9e	678.8e	381.8e	244.4e	169.7e
800S200-43	33	1401.5e	1051.2e	840.9e	700.8e	437.2e	279.8e	194.3e
800S250-43	33	1401.5e	1051.2e	840.9e	700.8e	459.5e	294.1e	204.2e
800S137-54	33	2788.4e	1811.6e	1159.4e	805.2e	452.9e	289.9e	201.3e
800S137-54	50	2788.4e	2091.3e	1518.3e	1054.4e	593.1e	379.6e	251.6e
800S162-54	33	2788.4e	2081.8e	1332.3e	925.2e	520.4e	333.1e	231.3e
800S162-54	50	2788.4e	2091.3e	1673.0e	1215.2e	683.6e	437.5e	283.3e
800S200-54	33	2788.4e	2091.3e	1619.9e	1124.9e	632.8e	405.0e	281.2e
800S200-54	50	2788.4e	2091.3e	1673.0e	1384.1e	778.6e	498.3e	332.5e
800S250-54	33	2788.4e	2091.3e	1603.4e	1113.5e	626.3e	400.9e	278.4e
800S250-54	50	2788.4e	2091.3e	1673.0e	1394.2e	815.2e	521.7e	362.3e
800S300-54	33	2788.4e	2091.3e	1660.1e	1152.9e	648.5e	415.0e	288.2e
800S300-54	50	2788.4e	2091.3e	1673.0e	1394.2e	838.0e	536.3e	372.4e
800S137-68	33	4407.4e	2479.2e	1586.7e	1101.8e	619.8e	396.7e	275.5e
800S137-68	50	5627.6e	3297.6e	2110.4e	1465.6e	824.4e	527.6e	317.9e
800S162-68	33	5013.4e	2820.0e	1804.8e	1253.3e	705.0e	451.2e	313.3e
800S162-68	50	5627.6e	3759.1e	2405.8e	1670.7e	939.8e	601.4e	357.6e
800S200-68	33	5627.6e	3482.7e	2228.9e	1547.9e	870.7e	557.2e	387.0e
800S200-68	50	5627.6e	4220.7e	2917.3e	2025.9e	1139.6e	711.5e	411.8e
800S250-68	33	5627.6e	3635.8e	2326.9e	1615.9e	909.0e	581.7e	404.0e
800S250-68	50	5627.6e	4220.7e	2866.9e	1990.9e	1119.9e	716.7e	467.4e
800S300-68	33	5627.6e	3545.0e	2268.8e	1575.5e	886.2e	567.2e	393.9e
800S300-68	50	5627.6e	4220.7e	2958.2e	2054.3e	1155.6e	739.6e	510.0e
800S137-97	33	7865.2e	4424.2e	2831.5e	1966.3e	1106.0e	707.9e	434.9e
800S137-97	50	9468.1e	5325.8e	3408.5e	2367.0e	1331.5e	751.5e	434.9
800S162-97	33	8632.9e	4856.0e	3107.8e	2158.2e	1214.0e	777.0e	491.3e
800S162-97	50	10657.1e	5994.6e	3836.6e	2664.3e	1498.7e	849.0e	491.3
800S200-97	33	9647.8e	5426.9e	3473.2e	2411.9e	1356.7e	868.3e	566.7e
800S200-97	50	13297.5e	7479.8e	4787.1e	3324.4e	1870.0e	979.3e	566.7
800S250-97	33	10476.4e	5893.0e	3771.5e	2619.1e	1473.2e	942.9e	646.9e
800S250-97	50	13839.9e	7785.0e	4982.4e	3460.0e	1946.2e	1117.9e	646.9e
800S300-97	33	10852.0e	6104.3e	3906.7e	2713.0e	1526.1e	976.7e	678.3e
800S300-97	50	13316.2e	7490.4e	4793.8e	3329.1e	1872.6e	1198.5e	716.8e
1000S137-43	33	1114.6e	835.9e	668.7e	557.3e	397.8e	254.6e	176.8e
1000S162-43	33	1114.6e	835.9e	668.7e	557.3e	418.0e	299.9e	208.2e
1000S200-43	33	1114.6e	835.9e	668.7e	557.3e	418.0e	334.4e	242.1e
1000S250-43	33	1114.6e	835.9e	668.7e	557.3e	418.0e	334.4e	256.2e
1000S137-54	33	2214.5e	1660.8e	1328.7e	991.8e	557.9e	357.0e	247.9e
1000S137-54	50	2214.5e	1660.8e	1328.7e	1107.2e	721.1e	461.5e	320.5e
1000S162-54	33	2214.5e	1660.8e	1328.7e	1107.2e	648.1e	414.8e	288.0e
1000S162-54	50	2214.5e	1660.8e	1328.7e	1107.2e	830.4e	538.3e	373.8e
1000S200-54	33	2214.5e	1660.8e	1328.7e	1107.2e	747.2e	478.2e	332.1e
1000S200-54	50	2214.5e	1660.8e	1328.7e	1107.2e	830.4e	621.6e	431.6e
1000S250-54	33	2214.5e	1660.8e	1328.7e	1107.2e	792.2e	507.0e	352.1e
1000S250-54	50	2214.5e	1660.8e	1328.7e	1107.2e	830.4e	655.5e	455.2e
1000S300-54	33	2214.5e	1660.8e	1328.7e	1107.2e	821.1e	525.5e	364.9e
1000S300-54	50	2214.5e	1660.8e	1328.7e	1107.2e	830.4e	664.3e	469.4e
1000S137-68	33	4460.5e	3118.7e	1996.0e	1386.1e	779.7e	499.0e	346.5e
1000S137-68	50	4460.5e	3345.4e	2611.5e	1813.5e	1020.1e	652.9e	453.4e
1000S162-68	33	4460.5e	3345.4e	2288.6e	1589.3e	894.0e	572.1e	397.3e
1000S162-68	50	4460.5e	3345.4e	2676.3e	2087.2e	1174.0e	751.4e	521.8e
1000S200-68	33	4460.5e	3345.4e	2616.9e	1817.3e	1022.2e	654.2e	454.3e
1000S200-68	50	4460.5e	3345.4e	2676.3e	2230.3e	1343.8e	860.0e	597.2e
1000S250-68	33	4460.5e	3345.4e	2676.3e	2059.9e	1158.7e	741.6e	515.0e
1000S250-68	50	4460.5e	3345.4e	2676.3e	2230.3e	1419.4e	908.4e	630.8e
1000S300-68	33	4460.5e	3345.4e	2676.3e	2010.6e	1131.0e	723.8e	502.6e
1000S300-68	50	4460.5e	3345.4e	2676.3e	2230.3e	1466.5e	938.6e	651.8e
1000S137-97	33	8895.0e	5003.4e	3202.2e	2223.7e	1250.9e	800.5e	555.9e
1000S137-97	50	12117.7e	6816.2e	4362.4e	3029.4e	1704.1e	1090.6e	757.4e
1000S162-97	33	9934.1e	5588.0e	3576.3e	2483.5e	1397.0e	894.1e	620.9e
1000S162-97	50	13151.6e	7712.9e	4936.2e	3427.9e	1928.2e	1234.1e	857.0e
1000S200-97	33	11321.2e	6368.2e	4075.6e	2830.3e	1592.0e	1018.9e	707.6e
1000S200-97	50	13151.6e	8727.6e	5585.7e	3878.9e	2181.9e	1396.4e	969.7e
1000S250-97	33	11791.0e	7647.8e	4894.6e	3399.0e	1912.0e	1223.6e	849.8e
1000S250-97	50	13151.6e	9863.7e	6407.1e	4449.4e	2502.8e	1601.8e	1104.1e
1000S300-97	33	11791.0e	7891.7e	5050.7e	3507.4e	1972.9e	1262.7e	876.9e
1000S300-97	50	13151.6e	9635.3e	6166.6e	4282.4e	2408.8e	1541.7e	1070.6e
1200S137-54	33	1836.5e	1377.4e	1101.9e	918.2e	646.7e	413.9e	287.4e
1200S137-54	50	1836.5e	1377.4e	1101.9e	918.2e	688.7e	529.9e	368.0e
1200S162-54	33	1836.5e	1377.4e	1101.9e	918.2e	688.7e	485.0e	336.8e
1200S162-54	50	1836.5e	1377.4e	1101.9e	918.2e	688.7e	550.9e	432.9e
1200S200-54	33	1836.5e	1377.4e	1101.9e	918.2e	688.7e	550.9e	393.2e
1200S200-54	50	1836.5e	1377.4e	1101.9e	918.2e	688.7e	550.9e	459.1e
1200S250-54	33	1836.5e	1377.4e	1101.9e	918.2e	688.7e	550.9e	420.7e
1200S250-54	50	1836.5e	1377.4e	1101.9e	918.2e	688.7e	550.9e	459.1e
1200S300-54	33	1836.5e	1377.4e	1101.9e	918.2e	688.7e	550.9e	438.5e
1200S300-54	50	1836.5e	1377.4e	1101.9e	918.2e	688.7e	550.9e	459.1e

TELLING HEADER DATA TABLES

Header Load Tables

Allowable Uniform Loads in Lbs./Ft. Span (ft)

Section	Fy (ksi)	3	4	5	6	8	10	12
12005137-68	33	3694.3e	2770.7e	2216.6e	1633.0e	918.6e	587.9e	408.2e
12005137-68	50	3694.3e	2770.7e	2216.6e	1847.2e	1187.3e	759.9e	527.7e
12005162-68	33	3694.3e	2770.7e	2216.6e	1847.2e	1061.6e	679.4e	471.8e
12005162-68	50	3694.3e	2770.7e	2216.6e	1847.2e	1377.9e	881.8e	612.4e
12005200-68	33	3694.3e	2770.7e	2216.6e	1847.2e	1225.6e	784.4e	544.7e
12005200-68	50	3694.3e	2770.7e	2216.6e	1847.2e	1385.4e	1020.7e	708.8e
12005250-68	33	3694.3e	2770.7e	2216.6e	1847.2e	1311.5e	839.3e	582.9e
12005250-68	50	3694.3e	2770.7e	2216.6e	1847.2e	1385.4e	1087.9e	755.5e
12005300-68	33	3694.3e	2770.7e	2216.6e	1847.2e	1369.2e	876.3e	608.5e
12005300-68	50	3694.3e	2770.7e	2216.6e	1847.2e	1385.4e	1108.3e	785.1e
12005137-97	33	10862.7e	6161.6e	3943.4e	2738.5e	1540.4e	985.9e	684.6e
12005137-97	50	10862.7e	8144.0e	5212.1e	3619.5e	2036.0e	1303.0e	904.9e
12005162-97	33	10862.7e	6988.2e	4472.4e	3105.8e	1747.0e	1118.1e	776.5e
12005162-97	50	10862.7e	8147.0e	5936.1e	4122.3e	2318.8e	1484.0e	1030.6e
12005200-97	33	10862.7e	7952.6e	5089.7e	3534.5e	1988.2e	1272.4e	883.6e
12005200-97	50	10862.7e	8147.0e	6517.6e	4698.7e	2643.0e	1691.5e	1174.7e
12005250-97	33	10862.7e	8147.0e	5467.8e	3797.1e	2135.9e	1367.0e	949.3e
12005250-97	50	10862.7e	8147.0e	6517.6e	5013.8e	2820.3e	1805.0e	1253.5e
12005300-97	33	10862.7e	8147.0e	6189.9e	4298.6e	2417.9e	1547.5e	1074.6e
12005300-97	50	10862.7e	8147.0e	6517.6e	5224.2e	2938.6e	1880.7e	1306.0e
14005162-54	33	1568.7e	1176.5e	941.2e	784.4e	588.3e	470.6e	378.3e
14005162-54	50	1568.7e	1176.5e	941.2e	784.4e	588.3e	470.6e	392.2e
14005200-54	33	1568.7e	1176.5e	941.2e	784.4e	588.3e	470.6e	392.2e
14005200-54	50	1568.7e	1176.5e	941.2e	784.4e	588.3e	470.6e	392.2e
14005250-54	33	1568.7e	1176.5e	941.2e	784.4e	588.3e	470.6e	392.2e
14005250-54	50	1568.7e	1176.5e	941.2e	784.4e	588.3e	470.6e	392.2e
14005300-54	33	1568.7e	1176.5e	941.2e	784.4e	588.3e	470.6e	392.2e
14005300-54	50	1568.7e	1176.5e	941.2e	784.4e	588.3e	470.6e	392.2e
14005162-68	33	3152.8e	2364.6e	1891.7e	1576.4e	1182.3e	772.8e	536.7e
14005162-68	50	3152.8e	2364.6e	1891.7e	1576.4e	1182.3e	945.8e	690.3e
14005200-68	33	3152.8e	2364.6e	1891.7e	1576.4e	1182.3e	900.0e	625.0e
14005200-68	50	3152.8e	2364.6e	1891.7e	1576.4e	1182.3e	945.8e	788.2e
14005250-68	33	3152.8e	2364.6e	1891.7e	1576.4e	1182.3e	945.8e	674.3e
14005250-68	50	3152.8e	2364.6e	1891.7e	1576.4e	1182.3e	945.8e	788.2e
14005300-68	33	3152.8e	2364.6e	1891.7e	1576.4e	1182.3e	945.8e	708.4e
14005300-68	50	3152.8e	2364.6e	1891.7e	1576.4e	1182.3e	945.8e	788.2e
14005162-97	33	9252.4e	6939.3e	5210.4e	3618.4e	2035.3e	1302.6e	904.6e
14005162-97	50	9252.4e	6939.3e	5551.4e	4626.2e	2665.9e	1706.2e	1184.8e
14005200-97	33	9252.4e	6939.3e	5551.4e	4143.4e	2330.6e	1491.6e	1035.8e
14005200-97	50	9252.4e	6939.3e	5551.4e	4626.2e	3062.0e	1959.7e	1360.9e
14005250-97	33	9252.4e	6939.3e	5551.4e	4468.4e	2513.5e	1608.6e	1117.1e
14005250-97	50	9252.4e	6939.3e	5551.4e	4626.2e	3290.4e	2105.8e	1462.4e
14005300-97	33	9252.4e	6939.3e	5551.4e	4626.2e	2645.7e	1693.3e	1175.9e
14005300-97	50	9252.4e	6939.3e	5551.4e	4626.2e	3446.8e	2206.0e	1531.9e

Header allowable uniform load table notes.

1. Deflection limit is L/360.
2. Allowable loads have not been modified for strength or deflection checks.
3. Headers consist of two members, boxed or back-to-back.
4. Allowable moment, shear, web crippling and moment of inertia are based on twice the value for a single member.
5. For distortional buckling allowable moment, kf = 0.
6. Web crippling check based on 1 inch end bearing. Where listed allowable loads are followed by "e" web stiffeners are required.
7. Web crippling and shear checks are based on unpunched webs. If web punchouts occur near supports members must be checked for reduced shear and web crippling in accordance with the NASPEC.
8. Members are assumed adequately braced to develop their full flexural strength.
9. Allowable loads are for simply supported headers with uniform bending loads only.
10. Moment of inertia for deflection is calculated at the maximum service level stress for the span and load listed. Note that this value may be higher than the effective Ixx listed in section property tables.

HEAD OF WALL DEFLECTION SYSTEM

TRUE-ACTION™ SLOTTED TRACK

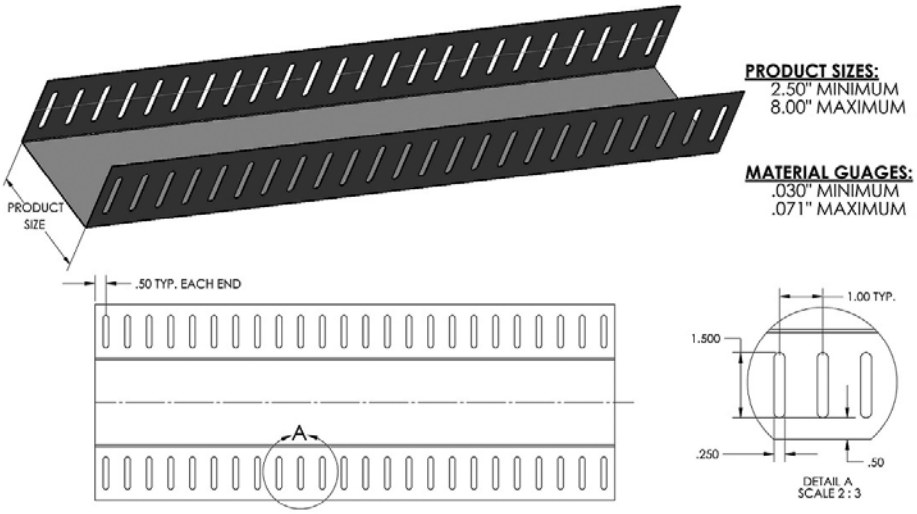

UL Rated Designs

True-Action Slotted Track framing members for use in Joint System Nos. HW -D-0003, HW -D-0016, HW -D-0020, HW -D-0021, HW -D-0024, HW -D-0025, HW -D-0029, HW -D-0031, HW -D-0034, HW -D-0036, HW -D-0042, HW -D-0043, HW -D-0044, HW -D-0045, HW -D-0046, HW -D-0047, HW -D-0048, HW -D-0049, HW -D-0054, HW -D-0062, HW -D-0063, HW -D-0067, HW -D-0068, HW - D-0069, HW -D-0071, HW -D-0072, HW -D-0073, HW -D-0076, HW -D-0077, HW -D-0082, HW -D-0083, HW -D-0084, HW -D-0085, HW -D-0087, HW -D-0088, HW -D-0089, HW -D-0091, HW -D-0099, HW -D-0101, HW -D-0102, HW -D-0106, HW -D-0107, HW -D-0108, HW -D-0111, HW -D-0134, HW -D-0136, HW -D-0137, HW -D-0144, HW -D-0146, HW -D-0152, HW -D-0154, HW -D-0160, HW - D-0162, HW -D-0167, HW -D-0170, HW -D-0173, HW -D-0183, HW -D-0184, HW -D-0185, HW -D-0186, HW -D-0190, HW -D-0193, HW -D-0194, HW -D-0195 , HW -D-0205, HW -D-0210, HW -D-0217, HW -D-0218, HW -D-0241, HW -D-0242, HW -D-0243, HW -D-0246, HW -D-0259, HW -D-0260, HW -D-0263, HW -D-0265, HW -D-0271, HW -D-0272, HW -D-0275, HW -D-0277, HW -D-0278, HW - D-0293, HW -D-0313, HW -D-0322, HW -D-0341, HW -D-0420, HW -D-0421, HW -D-0453, HW -D-0455, HW -D-0461, HW -D-0462, HW -D-0463, HW -D-0467, HW -D-0468, HW -D-0475, HW -D-0476, HW -D-0477, HW -D-0480, HW -D-0485, HW -D-0486, HW -D-0517, HW -D-0532, HW -D-0541, HW -D-0542, HW -D-0548, HW -D-0549, HW -D-0564, HW -D-0569, HW -D-0570, HW -D-0571, HW - D-0572.

Allowable Wall Heights (ft)

Gauge		Strength	Allowable Reaction	Lateral Pressure (psf)											
Mill Thickness	Design Thickness (in)	Fy		5 PSF			10 PSF			20 PSF			30 PSF		
				Stud Spacing (in)			Stud Spacing (in)			Stud Spacing (in)			Stud Spacing (in)		
(mils)	(in)	(ksi)	(lb/stud)	12	16	24	12	16	24	12	16	24	12	16	24
33	.0346	33	98	39.2	29.4	19.6	19.6	14.7	9.8	9.8	7.35	4.9	6.533	4.9	3.267
43	.0451	33	172	68.8	51.6	34.4	34.4	25.8	17.2	17.2	12.9	8.6	11.47	8.6	5.733
54	.0566	50	423	169.2	126.9	84.6	84.6	63.45	42.3	42.3	31.73	21.15	28.2	21.15	14.1
68	.0713	50	626	250.4	187.8	125.2	125.2	93.9	62.6	62.6	46.95	31.3	41.73	31.3	20.87

Notes:
1 Based on testing and analysis by Structural Testing and Research (STaR) Report No. 3160903 dated March 29, 2010 (Amended May 19, 2010)
2 Testing based on maximum 7/8" gap between end of stud and track web
3 Testing based on #8 screws ea leg for 33-mil track, #10 ea leg for 43, 54 and 68-mil track. All screws were pan head, 0.43 inch head diameter.
4 Loads have not been modified for duration of load

HEAD OF WALL DEFLECTION SYSTEM

SECTION PROPERTIES

			GROSS PROPERTIES [1]							EFFECTIVE PROPERTIES [4, 5]		
Section	Design thickness (in)	Fy (ksi)	Area (in^2)	Net Area[2] (in^2)	Wt.[3] (lb/ft)	I_{xx} (in^4)	R_x (in)	I_{yy} (in^4)	R_y (in)	S_{yy} (in^4)	S_{yy} (in^3)	M_{ay-y} (in-k)
250SLT250-33	0.0346	33	0.259	0.156	0.88	0.178	0.827	0.339	1.144	0.129	0.087	1.72
250SLT250-43	0.0451	33	0.338	0.203	1.15	0.23	0.826	0.443	1.146	0.168	0.113	2.23
250SLT250-54	0.0566	50	0.424	0.254	1.44	0.287	0.824	0.565	1.155	0.213	0.141	4.22
250SLT250-68	0.0713	50	0.534	0.32	1.82	0.36	0.821	0.728	1.168	0.273	0.177	5.29
350SLT250-33	0.0346	33	0.294	0.19	1	0.198	0.821	0.687	1.528	0.286	0.138	2.73
350SLT250-43	0.0451	33	0.383	0.248	1.3	0.257	0.819	0.896	1.53	0.373	0.185	3.66
350SLT250-54	0.0566	50	0.48	0.311	1.63	0.321	0.817	1.137	1.538	0.471	0.232	6.93
350SLT250-68	0.0713	50	0.605	0.391	2.06	0.401	0.814	1.454	1.55	0.598	0.29	8.69
362SLT250-33	0.0346	33	0.298	0.194	1.01	0.2	0.82	0.74	1.575	0.312	0.144	2.85
362SLT250-43	0.0451	33	0.389	0.253	1.32	0.26	0.818	0.966	1.577	0.406	0.195	3.86
362SLT250-54	0.0566	50	0.487	0.318	1.66	0.324	0.816	1.224	1.585	0.512	0.244	7.32
362SLT250-68	0.0713	50	0.614	0.4	2.09	0.406	0.813	1.565	1.597	0.65	0.306	9.17
400SLT250-33	0.0346	33	0.311	0.207	1.06	0.207	0.815	0.914	1.714	0.396	0.162	3.21
400SLT250-43	0.0451	33	0.405	0.27	1.38	0.268	0.813	1.193	1.715	0.516	0.227	4.49
400SLT250-54	0.0566	50	0.509	0.339	1.73	0.335	0.811	1.511	1.723	0.65	0.284	8.51
400SLT250-68	0.0713	50	0.641	0.427	2.18	0.418	0.808	1.928	1.735	0.825	0.356	10.67
550SLT250-33	0.0346	33	0.363	0.259	1.24	0.228	0.792	1.839	2.251	0.837	0.236	4.66
550SLT250-43	0.0451	33	0.473	0.338	1.61	0.295	0.79	2.399	2.252	1.142	0.34	6.72
550SLT250-54	0.0566	50	0.594	0.424	2.02	0.368	0.788	3.029	2.259	1.436	0.43	12.87
550SLT250-68	0.0713	50	0.748	0.534	2.54	0.46	0.785	3.849	2.269	1.817	0.584	17.48
600SLT250-33	0.0346	33	0.38	0.277	1.29	0.233	0.783	2.236	2.424	1.026	0.26	5.14
600SLT250-43	0.0451	33	0.496	0.36	1.69	0.303	0.781	2.916	2.425	1.407	0.378	7.47
600SLT250-54	0.0566	50	0.622	0.452	2.12	0.377	0.779	3.678	2.432	1.777	0.478	14.31
600SLT250-68	0.0713	50	0.783	0.569	2.67	0.472	0.776	4.67	2.442	2.266	0.655	19.61
800SLT250-33[6]	0.0346	33	0.45	0.346	1.53	0.252	0.748	4.318	3.099	2.003	0.358	7.07
800SLT250-43	0.0451	33	0.586	0.451	1.99	0.326	0.746	5.629	3.1	2.801	0.53	10.47
800SLT250-54	0.0566	50	0.735	0.565	2.5	0.407	0.744	7.09	3.106	3.54	0.671	20.1
800SLT250-68	0.0713	50	0.926	0.712	3.15	0.509	0.741	8.978	3.114	4.698	0.942	28.21

Notes:

1. Gross properties are based on the full section away from flange slots
2. Net area is based on the section through the flange slots
3. Weight is nominal weight of the gross section, not reduced for flange slots.
4. Effective properties are calculated in accordance with the 2007 NASPEC with 2010 Supplement (AISI S100-07/S2-10). For effective flange widths, the compression flange (before local buckling) is taken as the portion of the flange between the web and the slot (the slot and any steel beyond the slot is considered absent). The tension flange is taken as the net flange at the slots.
5. Cold-work of forming has not been considered for effective properties.
6. Web width-to-thickness ratio exceeds 200. Web stiffeners are requied at points of concentrated loads or reactions

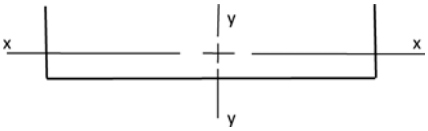

FLOOR ASSEMBLY DETAILS

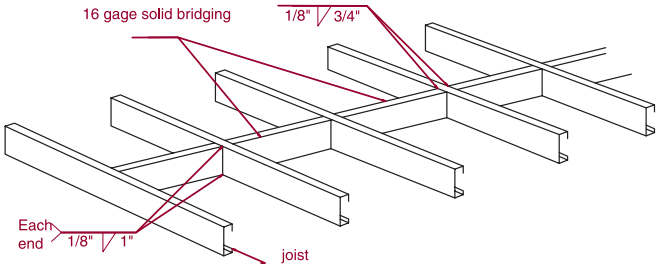

Notes

1. Install mechanical bridging spaced at the following intervals:
   a. 5'-0" on center maximum for any 1-5/8" flanged components or less.
   b. 7'-0" on center maximum for all remaining member types
2. Proper attachment of diaphragm rated products, such as plywood or metal deck, will prevent rotation of the compression flange of the joists. These may be used in lieu of the installation of the top flat strap. Installation of these products and the balance of the mechanical bridging components must be completed before any loads are applied to the joists.
3. Install 16 gauge solid bridging in first two and last two joist spaces. Starting at third joist space, install bridging, top and bottom, extending for 10' 0" run. Follow with solid bridging in one space.
4. Repeat to completion, with each 10' 0" run of strap bridging followed by one space of solid bridging. (Based on calculations, additional rows of bridging may be required.) Note: Solid bridging shall not be less than 2" maximum reduction to section depth.

Construction Detail

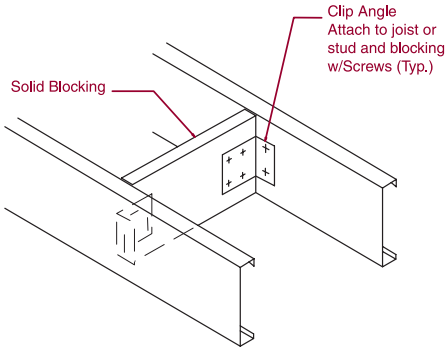

Joist or Rafters

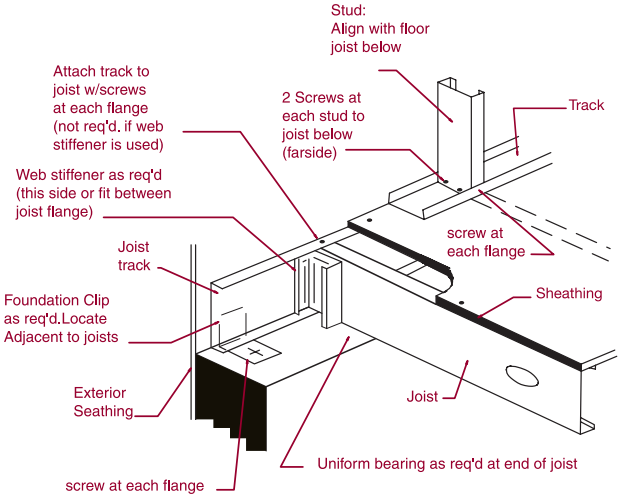

Construction Detail

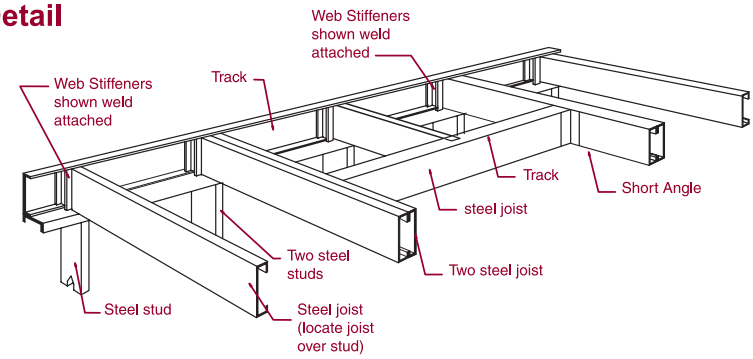

FLOOR ASSEMBLY DETAILS

Load bearing exterior wall

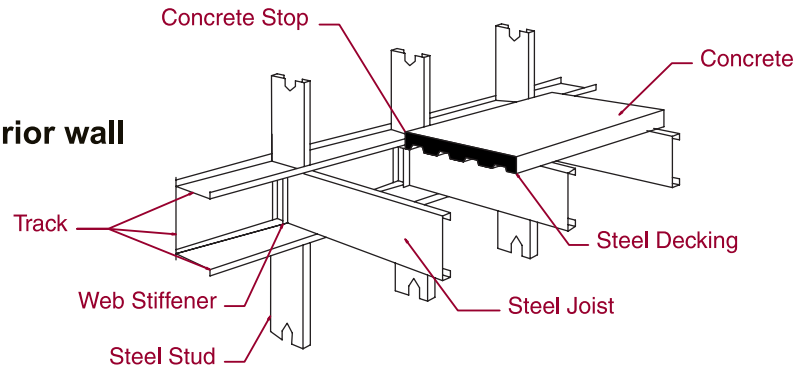

Load bearing interior wall

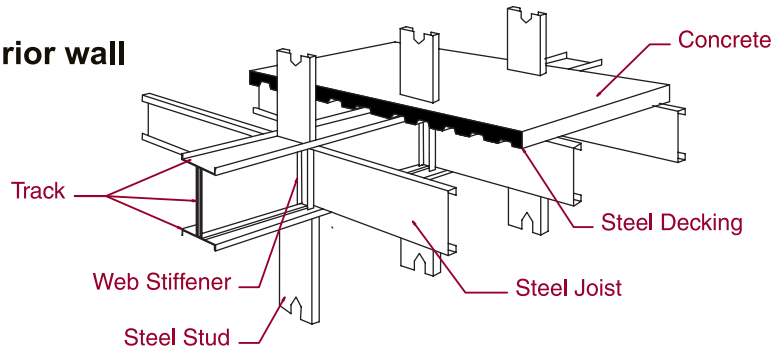

non- bearing exterior wall

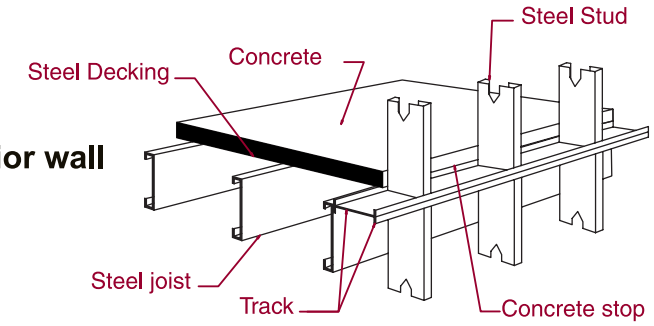

Web Stiffening Requirements

To develop adequate bearing strength for the loads shown in the joist span tables, each joist requires the following:

- For simple span conditions-a web stiffener at each end.
- For two span conditions-a web stiffener at each end plus single stiffener permissible in single story construction.
- For cantilevered conditions-a web stiffener at the ends plus a single stiffener at support adjacent to cantilever.

Interior support condition

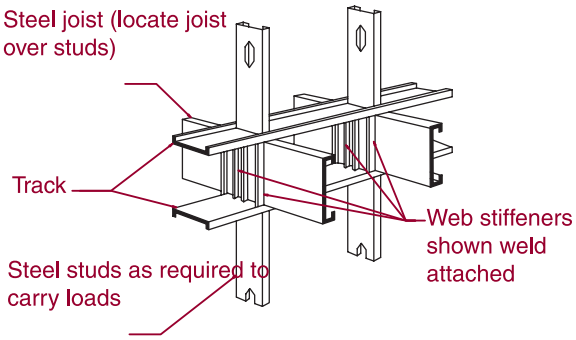

CEILING SPAN TABLE

DEFLECTION LIMIT L/240

		4 psf Lateral Support of Compression Flange						6 psf Lateral Support of Compression Flange						13 psf Lateral Support of Compression Flange					
Section	Fy (ksi)	Unsupported Joist Spacing (in) o.c.			Midspan Joist Spacing (in) o.c.			Unsupported Joist Spacing (in) o.c.			Midspan Joist Spacing (in) o.c.			Unsupported Joist Spacing (in) o.c.			Midspan Joist Spacing (in) o.c.		
162S125-18	33	7'3"	6'7"	5'10"	8'6"	7'8"	6'7"	6'5"	5'10"	5'1"	7'4"	6'7"	5'9"	5'0"	4'5"	3'9"	5'7"	4'10"	3'11"
162S125-27	33	8'7"	7'11"	7'1"	9'8"	8'10"	7'8"	7'8"	7'1"	6'3"	8'6"	7'8"	6'8"	6'1"	5'6"	4'9"	6'6"	5'11"	5'2"
162S125-30	33	9'0"	8'3"	7'4"	10'0"	9'1"	7'11"	8'0"	7'4"	6'7"	8'9"	7'11"	6'11"	6'5"	5'10"	5'0"	6'9"	6'1"	5'4"
162S125-33	33	9'6"	8'8"	7'8"	10'4"	9'5"	8'2"	8'4"	7'8"	6'10"	9'0"	8'2"	7'2"	6'8"	6'1"	5'4"	7'0"	6'4"	5'6"
162S137-27	33	9'11"	9'2"	8'0"	10'1"	9'2"	8'0"	8'10"	8'0"	7'0"	8'10"	8'0"	7'0"	6'10"	6'2"	5'5"	6'10"	6'2"	5'5"
162S137-30	33	10'4"	9'6"	8'3"	10'5"	9'6"	8'3"	9'1"	8'3"	7'3"	9'1"	8'3"	7'3"	7'0"	6'5"	5'7"	7'0"	6'5"	5'7"
162S137-33	33	10'9"	9'9"	8'7"	10'9"	9'9"	8'7"	9'5"	8'7"	7'6"	9'5"	8'7"	7'6"	7'3"	6'7"	5'9"	7'3"	6'7"	5'9"
250S125-18	33	8'5"	7'9"	6'11"	11'7"	10'6"	9'1"	7'6"	6'11"	6'2"	10'1"	9'1"	7'8"	6'0"	5'6"	4'10"e	7'5"	6'3"e	5'2"e
250S125-27	33	9'8"	8'11"	8'0"	13'5"	12'2"	10'7"	8'8"	8'0"	7'2"	11'8"	10'7"	9'3"	7'0"	6'6"	5'9"	9'0"	8'2"	6'10"
250S125-30	33	10'1"	9'3"	8'3"	13'10"	12'7"	10'11"	9'0"	8'3"	7'5"	12'1"	10'11"	9'7"	7'3"	6'8"	6'0"	9'4"	8'5"	7'3"
250S125-33	33	10'6"	9'8"	8'7"	14'3"	13'0"	11'4"	9'4"	8'7"	7'8"	12'6"	11'4"	9'11"	7'6"	6'11"	6'2"	9'7"	8'9"	7'7"
250S125-43	33	11'9"	10'10"	9'7"	15'6"	14'1"	12'4"	10'5"	9'7"	8'6"	13'7"	12'4"	10'9"	8'4"	7'8"	6'10"	10'6"	9'6"	8'4"
250S137-27	33	11'0"	10'2"	9'2"	14'0"	12'9"	11'1"	9'10"	9'2"	8'2"	12'3"	11'1"	9'9"	8'0"	7'5"	6'8"	9'6"	8'7"	7'6"
250S137-30	33	11'5"	10'6"	9'5"	14'5"	13'2"	11'6"	10'2"	9'5"	8'5"	12'8"	11'6"	10'0"	8'3"	7'8"	6'10"	9'9"	8'10"	7'9"
250S137-33	33	11'10"	10'11"	9'9"	14'11"	13'7"	11'10"	10'7"	9'9"	8'9"	13'1"	11'10"	10'4"	8'7"	7'11"	7'1"	10'1"	9'2"	8'0"
250S137-43	33	13'3"	12'2"	10'10"	16'3"	14'9"	12'11"	11'9"	10'10"	9'7"	14'2"	12'11"	11'3"	9'5"	8'8"	7'9"	10'11"	9'11"	8'8"
250S162-33	33	13'6"	12'5"	11'2"	15'8"	14'3"	12'5"	12'1"	11'2"	10'0"	13'8"	12'5"	10'10"	9'10"	9'1"	8'1"	10'7"	9'7"	8'5"
250S162-43	33	15'0"	13'9"	12'3"	17'1"	15'6"	13'6"	13'4"	12'3"	10'11"	14'11"	13'6"	11'10"	10'9"	9'11"	8'10"	11'6"	10'5"	9'2"
350S125-18	33	9'2"	8'6"	7'6"	12'6"	11'5"	9'11"	8'3"	7'6"	6'8"	11'0"	9'11"	8'5"e	6'6"	5'11"e	5'3"e	8'2"e	7'2"e	6'0"e
350S125-27	33	10'7"	9'9"	8'9"	14'11"	13'9"	12'3"	9'5"	8'9"	7'9"	13'4"	12'3"	10'7"	7'7"	7'1"	6'4"	10'4"	9'3"	7'9"
350S125-30	33	10'11"	10'1"	9'0"	15'5"	14'2"	12'9"	9'9"	9'0"	8'1"	13'9"	12'9"	11'2"	7'11"	7'3"	6'6"	10'11"	9'9"	8'3"
350S125-33	33	11'4"	10'5"	9'4"	16'0"	14'9"	13'2"	10'1"	9'4"	8'4"	14'3"	13'2"	11'9"	8'2"	7'7"	6'9"	11'5"	10'4"	8'10"
350S125-43	33	12'7"	11'7"	10'4"	17'7"	16'3"	14'6"	11'2"	10'4"	9'2"	15'8"	14'6"	12'11"	9'0"	8'3"	7'5"	12'7"	11'6"	10'1"
350S137-27	33	11'11"	11'0"	9'11"	17'0"	15'9"	14'1"	10'8"	9'11"	8'11"	15'3"	14'1"	12'4"	8'8"	8'1"	7'3"	11'11"	10'7"	8'11"e
350S137-30	33	12'4"	11'5"	10'3"	17'7"	16'3"	14'7"	11'0"	10'3"	9'2"	15'9"	14'7"	12'10"	9'0"	8'4"	7'6"	12'6"	11'3"	9'6"
350S137-33	33	12'9"	11'10"	10'7"	18'2"	16'9"	15'1"	11'5"	10'7"	9'6"	16'3"	15'1"	13'4"	9'3"	8'7"	7'8"	13'0"	11'9"	10'0"
350S137-43	33	14'2"	13'0"	11'7"	19'10"	18'4"	16'5"	12'7"	11'7"	10'4"	17'9"	16'5"	14'7"	10'2"	9'4"	8'5"	14'2"	12'11"	11'3"
350S162-33	33	14'6"	13'5"	12'1"	20'3"	18'5"	16'1"	13'0"	12'1"	10'10"	17'9"	16'1"	14'1"	10'7"	9'10"	8'10"	13'8"	12'5"	10'10"
350S162-43	33	16'0"	14'9"	13'2"	22'1"	20'0"	17'6"	14'3"	13'2"	11'9"	19'3"	17'6"	15'3"	11'6"	10'8"	9'7"	14'11"	13'6"	11'10"
362S125-18	33	9'3"	8'7"	7'7"	12'8"	11'7"	10'0"	8'4"	7'7"	6'9"	11'1"	10'0"	8'6"e	6'7"	6'0"e	5'4"e	8'3"e	7'4"e	6'1"e
362S125-27	33	10'8"	9'10"	8'10"	15'0"	13'11"	12'4"	9'6"	8'10"	7'10"	13'5"	12'4"	10'9"	7'8"	7'1"	6'5"	10'5"	9'4"	7'11"
362S125-30	33	11'0"	10'2"	9'1"	15'6"	14'4"	12'10"	9'10"	9'1"	8'2"	13'11"	12'10"	11'4"	8'0"	7'4"	6'7"	11'0"	9'11"	8'5"
362S125-33	33	11'5"	10'7"	9'5"	16'2"	14'10"	13'3"	10'3"	9'5"	8'5"	14'5"	13'3"	11'10"	8'3"	7'8"	6'10"	11'7"	10'6"	9'0"
362S125-43	33	12'8"	11'8"	10'5"	17'9"	16'5"	14'8"	11'3"	10'5"	9'3"	15'10"	14'8"	13'0"	9'1"	8'4"	7'6"	12'9"	11'8"	10'2"
362S137-27	33	12'0"	11'2"	10'0"	17'2"	15'11"	14'3"	10'10"	10'0"	9'0"	15'5"	14'3"	12'6"	8'9"	8'2"	7'4"	12'1"	10'9"	9'1"e
362S137-30	33	12'5"	11'6"	10'4"	17'8"	16'5"	14'8"	11'2"	10'4"	9'3"	15'10"	14'8"	13'0"	9'1"	8'5"	7'6"	12'8"	11'5"	9'8"
362S137-33	33	12'11"	11'11"	10'8"	18'4"	16'11"	15'2"	11'6"	10'8"	9'7"	16'5"	15'2"	13'6"	9'4"	8'8"	7'9"	13'2"	11'11"	10'2"
362S137-43	33	14'3"	13'2"	11'8"	20'0"	18'6"	16'7"	12'8"	11'8"	10'5"	17'11"	16'7"	14'9"	10'3"	9'5"	8'6"	14'5"	13'2"	11'5"
362S162-33	33	14'8"	13'7"	12'2"	20'10"	18'11"	16'6"	13'2"	12'2"	10'11"	18'2"	16'6"	14'5"	10'8"	9'11"	8'11"	14'1"	12'9"	11'2"
362S162-43	33	16'2"	14'11"	13'4"	22'8"	20'7"	18'0"	14'5"	13'4"	11'11"	19'10"	18'0"	15'9"	11'8"	10'9"	9'8"	15'4"	13'11"	12'2"
400S125-18	33	9'6"e	8'9"e	7'10"e	13'0"e	11'11"e	10'5"e	8'6"e	7'10"e	6'11"e	11'6"e	10'5"e	8'11"e	6'9"e	6'2"e	5'6"e	8'7"e	7'8"e	6'5"e
400S125-27	33	10'11"	10'1"	9'1"	15'5"	14'3"	12'9"	9'9"	9'1"	8'1"	13'10"	12'9"	11'2"	7'11"	7'4"	6'7"	10'10"	9'9"	8'3"
400S125-30	33	11'4"	10'5"	9'4"	16'0"	14'9"	13'2"	10'1"	9'4"	8'4"	14'3"	13'2"	11'9"	8'2"	7'7"	6'9"	11'5"	10'4"	8'9"
400S125-33	33	11'9"	10'10"	9'8"	16'7"	15'3"	13'8"	10'6"	9'8"	8'8"	14'9"	13'8"	12'2"	8'6"	7'10"	7'0"	11'11"	10'11"	9'4"
400S125-43	33	13'0"	12'0"	10'8"	18'3"	16'10"	15'0"	11'7"	10'8"	9'6"	16'3"	15'0"	13'5"	9'4"	8'7"	7'8"	13'1"	12'0"	10'7"
400S137-27	33	12'4"	11'5"	10'3"	17'7"	16'4"	14'8"	11'1"	10'3"	9'2"	15'10"	14'8"	13'0"	9'0"	8'4"	7'6"	12'7"	11'3"	9'6"e
400S137-30	33	12'9"	11'10"	10'7"	18'2"	16'10"	15'1"	11'5"	10'7"	9'6"	16'4"	15'1"	13'5"	9'3"	8'7"	7'9"	13'1"	11'10"	10'1"
400S137-33	33	13'3"	12'3"	10'11"	18'9"	17'4"	15'7"	11'10"	10'11"	9'10"	16'10"	15'7"	13'11"	9'7"	8'11"	8'0"	13'7"	12'4"	10'8"
400S137-43	33	14'7"	13'6"	12'0"	20'7"	19'0"	17'0"	13'0"	12'0"	10'9"	18'4"	17'0"	15'2"	10'6"	9'8"	8'8"	14'10"	13'7"	11'10"
400S162-33	33	15'0"	13'11"	12'6"	21'5"	19'10"	17'9"	13'6"	12'6"	11'2"	19'3"	17'9"	15'7"	10'11"	10'2"	9'1"	15'2"	13'9"	11'9"
400S162-43	33	16'7"	15'3"	13'8"	23'4"	21'7"	19'4"	14'9"	13'8"	12'2"	20'11"	19'4"	16'11"	11'11"	11'0"	9'11"	16'6"	15'0"	13'1"
550S125-27	33	12'1"	11'3"	10'1"	17'6"	16'1"	14'5"	10'11"	10'1"	9'1"	15'7"	14'5"	12'11"	8'11"	8'3"	7'5"	12'7"	11'7"	10'0"e
550S125-30	33	12'6"	11'7"	10'5"	17'11"	16'8"	14'11"	11'2"	10'5"	9'4"	16'2"	14'11"	13'4"	9'2"	8'6"	7'8"	13'0"	12'1"	10'7"e
550S125-33	33	12'10"	11'11"	10'8"	18'6"	17'1"	15'5"	11'7"	10'8"	9'7"	16'7"	15'5"	13'10"	9'5"	8'9"	7'10"	13'6"	12'5"	11'1"
550S125-43	33	14'2"	13'0"	11'8"	20'0"	18'6"	16'7"	12'7"	11'8"	10'5"	17'11"	16'7"	14'11"	10'2"	9'5"	8'6"	14'7"	13'6"	12'2"
550S137-27	33	13'8"	12'8"	11'5"	19'9"	18'4"	16'7"	12'4"	11'5"	10'4"	17'10"	16'7"	14'11"	10'1"	9'4"	8'5"e	14'8"	13'6"e	11'11"e
550S137-30	33	14'1"	13'0"	11'9"	20'3"	18'10"	17'0"	12'8"	11'9"	10'7"	18'3"	17'0"	15'4"	10'4"	9'7"	8'8"	15'0"	13'11"	12'4"e
550S137-33	33	14'6"	13'5"	12'1"	20'10"	19'4"	17'5"	13'0"	12'1"	10'10"	18'9"	17'5"	15'9"	10'8"	9'10"	8'11"	15'5"	14'3"	12'9"e
550S137-43	33	15'11"	14'8"	13'1"	22'7"	20'11"	18'9"	14'2"	13'1"	11'9"	20'3"	18'9"	16'10"	11'6"	10'8"	9'7"	16'6"	15'4"	13'9"
550S162-33	33	16'6"	15'3"	13'9"	23'9"	22'1"	19'11"	14'10"	13'9"	12'4"	21'5"	19'11"	17'11"	12'2"	11'3"	10'2"	17'7"	16'2"	14'3"e
550S162-43	33	18'0"	16'7"	14'11"	25'8"	23'9"	21'4"	16'1"	14'11"	13'4"	23'1"	21'4"	19'3"	13'1"	12'1"	10'11"	18'10"	17'6"	15'6"
600S125-27	33	12'5"e	11'6"e	10'4"e	17'11"e	16'6"e	14'9"e	11'2"e	10'4"e	9'4"e	16'0"e	14'9"e	13'2"e	9'2"e	8'6"e	7'7"e	12'11"e	11'10"e	10'4"e
600S125-30	33	12'9"	11'10"	10'8"	18'5"	17'1"	15'3"	11'6"	10'8"	9'7"	16'7"	15'3"	13'8"	9'5"	8'9"	7'10"	13'4"	12'4"	10'11"e
600S125-33	33	13'2"	12'3"	11'0"	18'11"	17'7"	15'10"	11'10"	11'0"	9'10"	17'0"	15'10"	14'2"	9'8"	8'11"	8'1"	13'10"	12'9"	11'5"
600S125-43	33	14'6"	13'4"	11'11"	20'6"	19'0"	17'0"	12'11"	11'11"	10'8"	18'4"	17'0"	15'3"	10'5"	9'8"	8'8"	15'0"	13'11"	12'6"
600S137-27	33	14'0"e	13'0"e	11'9"e	20'2"e	18'8"e	16'9"e	12'7"e	11'9"e	10'6"e	18'1"e	16'9"e	15'0"e	10'4"e	9'7"e	8'7"e	14'8"e	13'7"e	11'10"e
600S137-30	33	14'5"	13'4"	12'0"	20'10"	19'3"	17'3"	13'0"	12'0"	10'10"	18'8"	17'3"	15'6"	10'7"	9'10"	8'10"	15'2"	14'0"	12'5"e
600S137-33	33	14'11"	13'9"	12'5"	21'5"	19'10"	17'10"	13'4"	12'5"	11'2"	19'3"	17'10"	16'0"	10'11"	10'2"	9'2"	15'8"	14'6"	12'11"e
600S137-43	33	16'3"	15'0"	13'5"	23'1"	21'5"	19'3"	14'6"	13'5"	12'0"	20'9"	19'3"	17'4"	11'9"	10'11"	9'10"	16'11"	15'9"	14'2"
600S162-33	33	16'11"	15'8"	14'1"	24'5"	22'8"	20'5"	15'2"	14'1"	12'8"	22'0"	20'5"	18'5"	12'5"	11'7"	10'5"	18'0"	16'8"	14'9"e
600S162-43	33	18'5"	17'0"	15'3"	26'4"	24'4"	21'11"	16'6"	15'3"	13'8"	23'8"	21'11"	19'9"	13'5"	12'5"	11'2"	19'4"	17'11"	16'0"

Ceiling Span Table Notes

1. For unbraced sections, allowable moment based on NASPEC section C3.1.2 with KyLy = KtLt = listed span. For mid-span braced sections, allowable moment based on NASPEC C3.1.2 with KyLy = KtLt = (listed span)/2.
2. For spans listed with "e", web stiffeners are required at end reactions.
3. For distortional buckling allowable moment, $K_\phi = 0$.
4. Web crippling calculation based on bearing length = 1 inch.
5. Web crippling and shear capacity have not been reduced for punchouts. If web punchouts occur near supports members must be checked for reduced shear and web crippling in accordance with the NASPEC.
6. Values are for simple span conditions.
7. Moment of inertia for deflection is calculated at the maximum service level stress for the span and load listed. Note that this value may be higher than the effective Ixx listed in section property tables.

CEILING SPAN TABLE

DEFLECTION LIMIT L/360

		4 psf Lateral Support of Compression Flange						6 psf Lateral Support of Compression Flange						13 psf Lateral Support of Compression Flange					
		Unsupported Joist Spacing (in) o.c.			Midspan Joist Spacing (in) o.c.			Unsupported Joist Spacing (in) o.c.			Midspan Joist Spacing (in) o.c.			Unsupported Joist Spacing (in) o.c.			Midspan Joist Spacing (in) o.c.		
Section	Fy (ksi)																		
162S125-18	33	7' 3"	6' 7"	5' 10"	7' 5"	6' 9"	5' 11"	6' 5"	5' 10"	5' 1"	6' 6"	5' 11"	5' 1"	4' 11"	4' 5"	3' 9"	4' 11"	4' 6"	3' 10"
162S125-27	33	8' 6"	7' 8"	6' 9"	8' 6"	7' 8"	6' 9"	7' 5"	6' 9"	5' 10"	7' 5"	6' 9"	5' 10"	5' 9"	5' 2"	4' 6"	5' 9"	5' 2"	4' 6"
162S125-30	33	8' 9"	7' 11"	6' 11"	8' 9"	7' 11"	6' 11"	7' 8"	6' 11"	6' 1"	7' 8"	6' 11"	6' 1"	5' 11"	5' 4"	4' 8"	5' 11"	5' 4"	4' 8"
162S125-33	33	9' 0"	8' 2"	7' 2"	9' 0"	8' 2"	7' 2"	7' 11"	7' 2"	6' 3"	7' 11"	7' 2"	6' 3"	6' 1"	5' 6"	4' 10"	6' 1"	5' 6"	4' 10"
162S137-27	33	8' 10"	8' 0"	7' 0"	8' 10"	8' 0"	7' 0"	7' 9"	7' 0"	6' 2"	7' 9"	7' 0"	6' 2"	6' 0"	5' 5"	4' 9"	6' 0"	5' 5"	4' 9"
162S137-30	33	9' 1"	8' 3"	7' 3"	9' 1"	8' 3"	7' 3"	8' 0"	7' 3"	6' 4"	8' 0"	7' 3"	6' 4"	6' 2"	5' 7"	4' 11"	6' 2"	5' 7"	4' 11"
162S137-33	33	9' 5"	8' 7"	7' 6"	9' 5"	8' 7"	7' 6"	8' 3"	7' 6"	6' 6"	8' 3"	7' 6"	6' 6"	6' 4"	5' 9"	5' 1"	6' 4"	5' 9"	5' 1"
250S125-18	33	8' 5"	7' 9"	6' 11"	10' 3"	9' 3"	8' 1"	7' 6"	6' 11"	6' 2"	8' 11"	8' 1"	7' 0"	6' 0"	5' 6"	4' 10" e	6' 10"	6' 2" e	5' 2" e
250S125-27	33	9' 8"	8' 11"	8' 0"	11' 9"	10' 8"	9' 4"	8' 8"	8' 0"	7' 2"	10' 3"	9' 4"	8' 1"	7' 0"	6' 6"	5' 9"	7' 11"	7' 2"	6' 3"
250S125-30	33	10' 1"	9' 3"	8' 3"	12' 1"	11' 0"	9' 7"	9' 0"	8' 3"	7' 5"	10' 7"	9' 7"	8' 5"	7' 3"	6' 8"	6' 0"	8' 2"	7' 5"	6' 5"
250S125-33	33	10' 6"	9' 8"	8' 7"	12' 6"	11' 4"	9' 11"	9' 4"	8' 7"	7' 8"	10' 11"	9' 11"	8' 8"	7' 6"	6' 11"	6' 2"	8' 5"	7' 8"	6' 8"
250S125-43	33	11' 9"	10' 10"	9' 7"	13' 7"	12' 4"	10' 9"	10' 5"	9' 7"	8' 6"	11' 10"	10' 9"	9' 5"	8' 4"	7' 8"	6' 10"	9' 2"	8' 4"	7' 3"
250S137-27	33	11' 0"	10' 2"	9' 2"	12' 3"	11' 1"	9' 9"	9' 10"	9' 2"	8' 2"	10' 8"	9' 9"	8' 6"	8' 0"	7' 5"	6' 7"	8' 3"	7' 6"	6' 7"
250S137-30	33	11' 5"	10' 6"	9' 5"	12' 8"	11' 6"	10' 0"	10' 2"	9' 5"	8' 5"	11' 0"	10' 0"	8' 9"	8' 3"	7' 8"	6' 9"	8' 6"	7' 9"	6' 9"
250S137-33	33	11' 10"	10' 11"	9' 9"	13' 1"	11' 10"	10' 4"	10' 7"	9' 9"	8' 9"	11' 5"	10' 4"	9' 1"	8' 7"	7' 11"	7' 0"	8' 10"	8' 0"	7' 0"
250S137-43	33	13' 3"	12' 2"	10' 10"	14' 2"	12' 11"	11' 3"	11' 9"	10' 10"	9' 7"	12' 5"	11' 3"	9' 10"	9' 5"	8' 8"	7' 7"	9' 7"	8' 8"	7' 7"
250S162-33	33	13' 6"	12' 5"	10' 10"	13' 8"	12' 5"	10' 10"	12' 0"	10' 10"	9' 6"	12' 0"	10' 10"	9' 6"	9' 3"	8' 5"	7' 4"	9' 3"	8' 5"	7' 4"
250S162-43	33	14' 11"	13' 6"	11' 10"	14' 11"	13' 6"	11' 10"	13' 0"	11' 10"	10' 4"	13' 0"	11' 10"	10' 4"	10' 1"	9' 2"	8' 0"	10' 1"	9' 2"	8' 0"
350S125-18	33	9' 2"	8' 6"	7' 6"	12' 6"	11' 5"	9' 11"	8' 3"	7' 6"	6' 8"	11' 0"	9' 11"	8' 5" e	6' 6"	5' 11" e	5' 3" e	8' 2" e	7' 2" e	6' 0" e
350S125-27	33	10' 7"	9' 9"	8' 9"	14' 11"	13' 9"	12' 0"	9' 5"	8' 9"	7' 9"	13' 3"	12' 0"	10' 6"	7' 7"	7' 1"	6' 4"	10' 2"	9' 3"	7' 9"
350S125-30	33	10' 11"	10' 1"	9' 0"	15' 5"	14' 2"	12' 5"	9' 9"	9' 0"	8' 1"	13' 8"	12' 5"	10' 10"	7' 11"	7' 3"	6' 6"	10' 7"	9' 7"	8' 3"
350S125-33	33	11' 4"	10' 5"	9' 4"	16' 0"	14' 8"	12' 10"	10' 1"	9' 4"	8' 4"	14' 2"	12' 10"	11' 3"	8' 2"	7' 7"	6' 9"	10' 11"	9' 11"	8' 8"
350S125-43	33	12' 7"	11' 7"	10' 4"	17' 7"	16' 0"	13' 11"	11' 2"	10' 4"	9' 2"	15' 4"	13' 11"	12' 2"	9' 0"	8' 3"	7' 5"	11' 10"	10' 9"	9' 5"
350S137-27	33	11' 11"	11' 0"	9' 11"	15' 10"	14' 5"	12' 7"	10' 8"	9' 11"	8' 11"	13' 10"	12' 7"	11' 0"	8' 8"	8' 1"	7' 3"	10' 8"	9' 9"	8' 6"
350S137-30	33	12' 4"	11' 5"	10' 3"	16' 4"	14' 10"	13' 0"	11' 0"	10' 3"	9' 2"	14' 3"	13' 0"	11' 4"	9' 0"	8' 4"	7' 6"	11' 0"	10' 0"	8' 9"
350S137-33	33	12' 9"	11' 10"	10' 7"	16' 11"	15' 4"	13' 5"	11' 5"	10' 7"	9' 6"	14' 9"	13' 5"	11' 9"	9' 3"	8' 7"	7' 8"	11' 5"	10' 4"	9' 1"
350S137-43	33	14' 2"	13' 0"	11' 7"	18' 4"	16' 8"	14' 7"	12' 7"	11' 7"	10' 4"	16' 1"	14' 7"	12' 9"	10' 2"	9' 4"	8' 5"	12' 5"	11' 3"	9' 10"
350S162-33	33	14' 6"	13' 5"	12' 1"	17' 9"	16' 1"	14' 1"	13' 0"	12' 1"	10' 10"	15' 6"	14' 1"	12' 3"	10' 7"	9' 10"	8' 10"	11' 11"	10' 10"	9' 6"
350S162-43	33	16' 0"	14' 9"	13' 2"	19' 3"	17' 6"	15' 3"	14' 3"	13' 2"	11' 9"	16' 10"	15' 3"	13' 4"	11' 6"	10' 8"	9' 7"	13' 0"	11' 10"	10' 4"
362S125-18	33	9' 3"	8' 7"	7' 7"	12' 8"	11' 7"	10' 0"	8' 4"	7' 7"	6' 9"	11' 1"	10' 0"	8' 6" e	6' 7"	6' 0" e	5' 4" e	8' 3" e	7' 4" e	6' 1" e
362S125-27	33	10' 8"	9' 10"	8' 10"	15' 0"	13' 11"	12' 4"	9' 6"	8' 10"	7' 10"	13' 5"	12' 4"	10' 9"	7' 8"	7' 1"	6' 5"	10' 5"	9' 4"	7' 11"
362S125-30	33	11' 0"	10' 2"	9' 1"	15' 6"	14' 4"	12' 9"	9' 10"	9' 1"	8' 2"	13' 11"	12' 9"	11' 2"	8' 0"	7' 4"	6' 7"	10' 10"	9' 10"	8' 5"
362S125-33	33	11' 5"	10' 7"	9' 5"	16' 2"	14' 10"	13' 2"	10' 3"	9' 5"	8' 5"	14' 5"	13' 2"	11' 6"	8' 3"	7' 8"	6' 10"	11' 3"	10' 2"	8' 11"
362S125-43	33	12' 8"	11' 8"	10' 5"	17' 9"	16' 5"	14' 4"	11' 3"	10' 5"	9' 3"	15' 9"	14' 4"	12' 6"	9' 1"	8' 4"	7' 6"	12' 2"	11' 1"	9' 8"
362S137-27	33	12' 0"	11' 2"	10' 0"	16' 3"	14' 9"	12' 11"	10' 10"	10' 0"	9' 0"	14' 3"	12' 11"	11' 3"	8' 9"	8' 2"	7' 4"	11' 0"	10' 0"	8' 9" e
362S137-30	33	12' 5"	11' 6"	10' 4"	16' 10"	15' 3"	13' 4"	11' 2"	10' 4"	9' 3"	14' 8"	13' 4"	11' 8"	9' 1"	8' 5"	7' 6"	11' 4"	10' 4"	9' 0"
362S137-33	33	12' 11"	11' 11"	10' 8"	17' 4"	15' 9"	13' 9"	11' 6"	10' 8"	9' 7"	15' 2"	13' 9"	12' 0"	9' 4"	8' 8"	7' 9"	11' 9"	10' 8"	9' 4"
362S137-43	33	14' 3"	13' 2"	11' 8"	18' 11"	17' 2"	15' 0"	12' 8"	11' 8"	10' 5"	16' 6"	15' 0"	13' 1"	10' 3"	9' 5"	8' 6"	12' 9"	11' 7"	10' 1"
362S162-33	33	14' 8"	13' 7"	12' 2"	18' 2"	16' 6"	14' 5"	13' 2"	12' 2"	10' 11"	15' 11"	14' 5"	12' 7"	10' 8"	9' 11"	8' 11"	12' 3"	11' 2"	9' 9"
362S162-43	33	16' 2"	14' 11"	13' 4"	19' 10"	18' 0"	15' 9"	14' 5"	13' 4"	11' 11"	17' 3"	15' 9"	13' 9"	11' 8"	10' 9"	9' 8"	13' 4"	12' 2"	10' 7"
400S125-18	33	9' 6" e	8' 9" e	7' 10" e	13' 0" e	11' 11" e	10' 5" e	8' 6" e	7' 10" e	6' 11" e	11' 6" e	10' 5" e	8' 11" e	6' 9" e	6' 2" e	5' 6" e	8' 7" e	7' 8" e	6' 5" e
400S125-27	33	10' 11"	10' 1"	9' 1"	15' 5"	14' 3"	12' 9"	9' 9"	9' 1"	8' 1"	13' 10"	12' 9"	11' 2"	7' 11"	7' 4"	6' 7"	10' 10"	9' 9"	8' 3"
400S125-30	33	11' 4"	10' 5"	9' 4"	16' 0"	14' 9"	13' 2"	10' 1"	9' 4"	8' 4"	14' 3"	13' 2"	11' 9"	8' 2"	7' 7"	6' 9"	11' 5"	10' 4"	8' 9"
400S125-33	33	11' 9"	10' 10"	9' 8"	16' 7"	15' 3"	13' 8"	10' 6"	9' 8"	8' 8"	14' 9"	13' 8"	12' 2"	8' 6"	7' 10"	7' 0"	11' 11"	10' 11"	9' 4"
400S125-43	33	13' 0"	12' 0"	10' 8"	18' 3"	16' 10"	15' 0"	11' 7"	10' 8"	9' 6"	16' 3"	15' 0"	13' 5"	9' 4"	8' 7"	7' 8"	13' 1"	12' 0"	10' 6"
400S137-27	33	12' 4"	11' 5"	10' 3"	17' 7"	16' 0"	13' 11"	11' 1"	10' 3"	9' 2"	15' 4"	13' 11"	12' 2"	9' 0"	8' 4"	7' 6"	11' 10"	10' 9"	9' 5" e
400S137-30	33	12' 9"	11' 10"	10' 7"	18' 2"	16' 6"	14' 5"	11' 5"	10' 7"	9' 6"	15' 10"	14' 5"	12' 7"	9' 3"	8' 7"	7' 9"	12' 3"	11' 1"	9' 9"
400S137-33	33	13' 3"	12' 3"	10' 11"	18' 9"	17' 0"	14' 11"	11' 10"	10' 11"	9' 10"	16' 5"	14' 11"	13' 0"	9' 7"	8' 11"	8' 0"	12' 8"	11' 6"	10' 1"
400S137-43	33	14' 7"	13' 6"	12' 0"	20' 5"	18' 6"	16' 2"	13' 0"	12' 0"	10' 9"	17' 10"	16' 2"	14' 2"	10' 6"	9' 8"	8' 8"	13' 9"	12' 6"	10' 11"
400S162-33	33	15' 0"	13' 11"	12' 6"	19' 8"	17' 10"	15' 7"	13' 6"	12' 6"	11' 2"	17' 2"	15' 7"	13' 7"	10' 11"	10' 2"	9' 1"	13' 3"	12' 0"	10' 6"
400S162-43	33	16' 7"	15' 3"	13' 8"	21' 4"	19' 5"	16' 11"	14' 9"	13' 8"	12' 2"	18' 8"	16' 11"	14' 10"	11' 11"	11' 0"	9' 11"	14' 5"	13' 1"	11' 5"
550S125-27	33	12' 1"	11' 3"	10' 1"	17' 6"	16' 1"	14' 5"	10' 11"	10' 1"	9' 1"	15' 7"	14' 5"	12' 11"	8' 11"	8' 3"	7' 5"	12' 7"	11' 7"	10' 0" e
550S125-30	33	12' 6"	11' 7"	10' 5"	17' 11"	16' 8"	14' 11"	11' 2"	10' 5"	9' 4"	16' 2"	14' 11"	13' 4"	9' 2"	8' 6"	7' 8"	13' 0"	12' 1"	10' 7" e
550S125-33	33	12' 10"	11' 11"	10' 8"	18' 6"	17' 1"	15' 5"	11' 7"	10' 8"	9' 7"	16' 7"	15' 5"	13' 10"	9' 5"	8' 9"	7' 10"	13' 6"	12' 5"	11' 1"
550S125-43	33	14' 2"	13' 0"	11' 8"	20' 0"	18' 6"	16' 7"	12' 7"	11' 8"	10' 5"	17' 11"	16' 7"	14' 11"	10' 2"	9' 5"	8' 6"	14' 7"	13' 6"	12' 2"
550S137-27	33	13' 8"	12' 8"	11' 5"	19' 9"	18' 4"	16' 7"	12' 4"	11' 5"	10' 4"	17' 10"	16' 7"	14' 11"	10' 1"	9' 4"	8' 5" e	14' 8"	13' 6" e	11' 11" e
550S137-30	33	14' 1"	13' 0"	11' 9"	20' 3"	18' 10"	17' 0"	12' 8"	11' 9"	10' 7"	18' 3"	17' 0"	15' 4"	10' 4"	9' 7"	8' 8"	15' 0"	13' 11"	12' 4" e
550S137-33	33	14' 6"	13' 5"	12' 1"	20' 10"	19' 4"	17' 5"	13' 0"	12' 1"	10' 10"	18' 9"	17' 5"	15' 9"	10' 8"	9' 10"	8' 11"	15' 5"	14' 3"	12' 9" e
550S137-43	33	15' 11"	14' 8"	13' 1"	22' 7"	20' 11"	18' 9"	14' 2"	13' 1"	11' 9"	20' 3"	18' 9"	16' 10"	11' 6"	10' 8"	9' 7"	16' 6"	15' 4"	13' 9"
550S162-33	33	16' 6"	15' 3"	13' 9"	23' 9"	22' 1"	19' 11"	14' 10"	13' 9"	12' 4"	21' 5"	19' 11"	17' 5"	12' 2"	11' 3"	10' 2"	17' 0"	15' 5"	13' 6" e
550S162-43	33	18' 0"	16' 7"	14' 11"	25' 8"	23' 9"	21' 4"	16' 1"	14' 11"	13' 4"	23' 1"	21' 4"	19' 0"	13' 1"	12' 1"	10' 11"	18' 6"	16' 10"	14' 8"
600S125-27	33	12' 5" e	11' 6" e	10' 4" e	17' 11" e	16' 6" e	14' 9" e	11' 2" e	10' 4" e	9' 4" e	16' 0" e	14' 9" e	13' 2" e	9' 2" e	8' 6" e	7' 7" e	12' 11" e	11' 10" e	10' 4" e
600S125-30	33	12' 9"	11' 10"	10' 8"	18' 5"	17' 1"	15' 3"	11' 6"	10' 8"	9' 7"	16' 7"	15' 3"	13' 8"	9' 5"	8' 9"	7' 10"	13' 4"	12' 4"	10' 11" e
600S125-33	33	13' 2"	12' 3"	11' 0"	18' 11"	17' 7"	15' 10"	11' 10"	11' 0"	9' 10"	17' 0"	15' 10"	14' 2"	9' 8"	8' 11"	8' 1"	13' 10"	12' 9"	11' 5"
600S125-43	33	14' 6"	13' 4"	11' 11"	20' 6"	19' 0"	17' 0"	12' 11"	11' 11"	10' 8"	18' 4"	17' 0"	15' 3"	10' 5"	9' 8"	8' 8"	15' 0"	13' 11"	12' 6"
600S137-27	33	14' 0" e	13' 0" e	11' 9" e	20' 2" e	18' 8" e	16' 9" e	12' 7" e	11' 9" e	10' 6" e	18' 1" e	16' 9" e	15' 0" e	10' 4" e	9' 7" e	8' 7" e	14' 8" e	13' 7" e	11' 10" e
600S137-30	33	14' 5"	13' 4"	12' 0"	20' 10"	19' 3"	17' 3"	13' 0"	12' 0"	10' 10"	18' 8"	17' 3"	15' 6"	10' 7"	9' 10"	8' 10"	15' 2"	14' 0"	12' 5" e
600S137-33	33	14' 11"	13' 9"	12' 5"	21' 5"	19' 10"	17' 10"	13' 4"	12' 5"	11' 2"	19' 3"	17' 10"	16' 0"	10' 11"	10' 2"	9' 2"	15' 8"	14' 6"	12' 11" e
600S137-43	33	16' 3"	15' 0"	13' 5"	23' 1"	21' 5"	19' 3"	14' 6"	13' 5"	12' 0"	20' 9"	19' 3"	17' 4"	11' 9"	10' 11"	9' 10"	16' 11"	15' 9"	14' 2"
600S162-33	33	16' 11"	15' 8"	14' 1"	24' 5"	22' 8"	20' 5"	15' 2"	14' 1"	12' 8"	22' 0"	20' 5"	18' 5"	12' 5"	11' 7"	10' 5"	18' 0"	16' 6"	14' 5" e
600S162-43	33	18' 5"	17' 0"	15' 3"	26' 4"	24' 4"	21' 11"	16' 6"	15' 3"	13' 8"	23' 8"	21' 11"	19' 9"	13' 5"	12' 5"	11' 2"	19' 4"	17' 11"	15' 9"

Ceiling Span Table Notes

1. For unbraced sections, allowable moment based on NASPEC section C3.1.2 with KyLy = KtLt = listed span. For mid-span braced sections, allowable moment based on NASPEC C3.1.2 with KyLy = KtLt = (listed span)/2.
2. For spans listed with "e", web stiffeners are required at end reactions.
3. For distortional buckling allowable moment, $K_\phi = 0$.
4. Web crippling calculation based on bearing length = 1 inch.
5. Web crippling and shear capacity have not been reduced for punchouts. If web punchouts occur near supports members must be checked for reduced shear and web crippling in accordance with the NASPEC.
6. Values are for simple span conditions.
7. Moment of inertia for deflection is calculated at the maximum service level stress for the span and load listed. Note that this value may be higher than the effective Ixx listed in section property tables.

BRIDGING-BRACING

(CRC) Cold-Rolled Channel

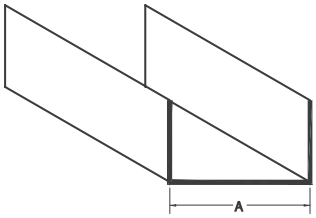

Product Data:
- Available in galvanized steel meeting ASTM A-1003 or hot-dipped galvanized steel meeting ASTM A-653, G60.
- Lengths: 16' stock length. (Other lengths available)

Uses:
- Bridging, (lateral support) in walls carrying axial and/or wind loads.
- Bracing studs at door bucks and furring for ceilings.
- Used in conjunction with metal lath and plaster in partitions, ceilings, column and beam enclosures, etc.

U-Channel (CRC) Properties and Spans

	Design	Gross						Effective Properties 33 ksi			
	Thickness	Area	Weight	Ix	Rx	Iy	Ry	Ix	Sx	Ma	Va
Section	(in)	(in2)	(lb/ft)	(in4)	(in)	(in4)	(in)	(in4)	(in3)	(in-k)	(lb)
CRC-075	0.0566	0.087	0.30	0.007	0.288	0.002	0.155	0.007	0.019	0.45	315
CRC-150	0.0566	0.129	0.44	0.039	0.547	0.003	0.144	0.039	0.052	1.22	840
CRC-200	0.0566	0.157	0.54	0.079	0.709	0.003	0.136	0.079	0.079	1.87	1190
CRC-250	0.0566	0.186	0.63	0.139	0.866	0.003	0.128	0.139	0.111	2.64	1540

Notes:
1 Minimum deliverable base metal thickness is 95% of design thickness.
2 Inside bend radius taken as 3/32".
3 Effective properties based on Fy = 33 ksi.
4 For deflection calculations, use the effective moment of inertia.

Allowable U-Channel (CRC) Ceiling Spans - L/240

		4 psf					6 psf					13 psf					15 psf				
		Channel Spacing (in) o.c.					Channel Spacing (in) o.c.					Channel Spacing (in) o.c.					Channel Spacing (in) o.c.				
Section	Spans	24	36	48	60	72	24	36	48	60	72	24	36	48	60	72	24	36	48	60	72
CRC-075	Single	3' 11"	3' 5"	3' 1"	2' 10"	2' 8"	3' 5"	3' 0"	2' 8"	2' 6"	2' 4"	2' 7"	2' 4"	2' 1"	1' 11"	1' 9"	2' 6"	2' 2"	2' 0"	1' 10"	1' 8"
	Multiple	4' 10"	4' 2"	3' 10"	3' 7"	3' 4"	4' 2"	3' 8"	3' 4"	3' 1"	2' 10"	3' 3"	2' 9"	2' 4"	2' 1"	1' 11"	3' 1"	2' 7"	2' 2"	2' 0"	1' 9"
CRC-150	Single	5' 6"	4' 10"	4' 5"	4' 1"	3' 10"	4' 10"	4' 3"	3' 10"	3' 7"	3' 5"	3' 9"	3' 3"	3' 0"	2' 9"	2' 7"	3' 7"	3' 2"	2' 10"	2' 7"	2' 5"
	Multiple	7' 1"	6' 2"	5' 8"	5' 3"	4' 11"	6' 2"	5' 5"	4' 11"	4' 7"	4' 4"	4' 10"	4' 2"	3' 9"	3' 4"	3' 0"	4' 7"	4' 0"	3' 6"	3' 1"	2' 9"
CRC-200	Single	5' 10"	5' 1"	4' 8"	4' 4"	4' 1"	5' 1"	4' 6"	4' 1"	3' 10"	3' 7"	4' 0"	3' 6"	3' 2"	3' 0"	2' 10"	3' 10"	3' 4"	3' 1"	2' 10"	2' 8"
	Multiple	7' 5"	6' 6"	5' 11"	5' 6"	5' 2"	6' 6"	5' 8"	5' 2"	4' 10"	4' 7"	5' 1"	4' 5"	4' 0"	3' 9"	3' 6"	4' 10"	4' 3"	3' 10"	3' 7"	3' 2"
CRC-250	Single	6' 1"	5' 4"	4' 10"	4' 6"	4' 3"	5' 4"	4' 8"	4' 3"	4' 0"	3' 9"	4' 2"	3' 8"	3' 4"	3' 1"	2' 11"	4' 0"	3' 6"	3' 2"	3' 0"	2' 10"
		7' 9"	6' 9"	6' 2"	5' 9"	5' 5"	6' 9"	5' 11"	5' 5"	5' 0"	4' 9"	5' 3"	4' 7"	4' 3"	3' 11"	3' 9"	5' 0"	4' 5"	4' 0"	3' 9"	3' 7"

Allowable U-Channel (CRC) Ceiling Spans - L/360

		4 psf					6 psf					13 psf					15 psf				
		Channel Spacing (in) o.c.					Channel Spacing (in) o.c.					Channel Spacing (in) o.c.					Channel Spacing (in) o.c.				
Section	Spans	24	36	48	60	72	24	36	48	60	72	24	36	48	60	72	24	36	48	60	72
CRC-075	Single	3' 5"	3' 0"	2' 8"	2' 6"	2' 4"	3' 0"	2' 7"	2' 4"	2' 2"	2' 1"	2' 4"	2' 0"	1' 10"	1' 8"	1' 7"	2' 2"	1' 11"	1' 9"	1' 7"	1' 6"
	Multiple	4' 2"	3' 8"	3' 4"	3' 1"	2' 11"	3' 8"	3' 2"	2' 11"	2' 8"	2' 7"	2' 10"	2' 6"	2' 3"	2' 1"	1' 11"	2' 8"	2' 4"	2' 2"	2' 0"	1' 9"
CRC-150	Single	5' 6"	4' 10"	4' 5"	4' 1"	3' 10"	4' 10"	4' 3"	3' 10"	3' 7"	3' 5"	3' 9"	3' 3"	3' 0"	2' 9"	2' 7"	3' 7"	3' 2"	2' 10"	2' 7"	2' 5"
	Multiple	7' 1"	6' 2"	5' 8"	5' 3"	4' 11"	6' 2"	5' 5"	4' 11"	4' 7"	4' 4"	4' 10"	4' 2"	3' 9"	3' 4"	3' 0"	4' 7"	4' 0"	3' 6"	3' 1"	2' 9"
CRC-200	Single	5' 10"	5' 1"	4' 8"	4' 4"	4' 1"	5' 1"	4' 6"	4' 1"	3' 10"	3' 7"	4' 0"	3' 6"	3' 2"	3' 0"	2' 10"	3' 10"	3' 4"	3' 1"	2' 10"	2' 8"
	Multiple	7' 5"	6' 6"	5' 11"	5' 6"	5' 2"	6' 6"	5' 8"	5' 2"	4' 10"	4' 7"	5' 1"	4' 5"	4' 0"	3' 9"	3' 6"	4' 10"	4' 3"	3' 10"	3' 7"	3' 2"
CRC-250	Single	6' 1"	5' 4"	4' 10"	4' 6"	4' 3"	5' 4"	4' 8"	4' 3"	4' 0"	3' 9"	4' 2"	3' 8"	3' 4"	3' 1"	2' 11"	4' 0"	3' 6"	3' 2"	3' 0"	2' 10"
		7' 9"	6' 9"	6' 2"	5' 9"	5' 5"	6' 9"	5' 11"	5' 5"	5' 0"	4' 9"	5' 3"	4' 7"	4' 3"	3' 11"	3' 9"	5' 0"	4' 5"	4' 0"	3' 9"	3' 7"

Notes:
1 Multiple span indicates two or more equal spans with channel continuous over interior supports.
2 End and interior bearing length = 0.75". Web stiffeners are not required.
3 Listed spans are based on unbraced compression flanges.
4 Moment of inertia for deflection is calculated at the maximum service level stress for the span and load listed. Note that this value may be higher than the effective Ixx listed in section property tables.

(FS) Flat Strapping

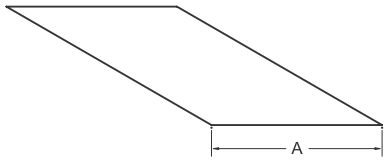

Product Data:
- Designation: Width-FS- Gauge.
  - o Ex 2" FS- 20Ga
- Stock widths: 2", 4", 6"
- Custom Widths are available in increments of even inches.
  - o Examples:1.5, 2, 3, 4, 5, 6, 7, 8, 9, 10, 11, 12, 13, 14 15, 16, 17, 18, 19, 20, 21, 22, 23, 24, 25, 26, 27, 28, 29, 30, 31, 32, 33, 34, 35, 36, 37, 38, 39, 40, 41,42, 43, 44, 45, 46, 47, 48"
- Length: 10' Standard (Alt. Lengths Available, ie. 8')
- Gauges:
  - o 33KSI: 25, 22, 20, 20S& 18 gauge.
  - o 50KSI: 20S, 22, 16, 14 &12 gauge.
- Coating:
  - o Drywall: Standard G-40 Hot Dipped Galvanized. Also Available in G-60 and G-90.
  - o Structural: G-60 Hot Dipped Galvanized. Also Available in G-60 and G-90
- Meets applicable ASTM's for Structural and Drywall applications:
  - o ASTM- A1003, A-653, A924, C-645, C754, C955, C1007

Uses

Provides tension force resistance in shear wall assemblies.

- Backing plates for fixtures, railings and where ever additional pullout strength is required.

- Resists racking of prefabricated wall assemblies while handling, transporting, and erecting.

FASTENING SYSTEMS

ALLOWABLE SCREW CONNECTION CAPACITY (LB/SCREW)

Thickness (mils)	Design Thickness (in)	Fy (ksi)	Fu (ksi)	#6 Screw 0.138" dia; 5/16" head		#8 Screw 0.164" dia; 5/16" head		#10 Screw 0.190" dia; 5/16" head		#12 Screw 0.216" dia; 0.340" head	
				Shear	Tension	Shear	Tension	Shear	Tension	Shear	Tension
18	0.0188	33	45	60	33	66	39	71	46	75	52
27	0.0283	33	45	111	50	121	59	131	69	139	78
30	0.0312	33	45	129	55	141	65	151	76	161	86
33	0.0346	33	45	151	61	164	72	177	84	188	95
43	0.0451	33	45	214	79	244	94	263	109	280	124
54	0.0566	33	45	214	84	303	118	370	137	394	156
68	0.0713	33	45	214	84	303	118	406	159	525	196
54	0.0566	50	65	214	84	303	118	406	159	525	205
68	0.0713	50	65	214	84	303	118	406	159	525	205

Screw Table Notes

1. Capacities based on section E4 of AISI S100-07/2-10 (2007 NASPEC with 2010 Supplement No. 2).
2. When connecting materials of different steel thicknesses or tensile strengths, use the lowest values. Tabulated values assume two sheets of equal thickness are connected
3. Where multiple fasteners are used, screws are assumed to have a center-to-center spacing of at least 3 times the nominal screw diameter, d.
4. Screws are assumed to have a center-of-screw to edge-of-steel dimension of at least 1.5 times the nominal screw diameter, d.
5. Tension capacity is based on the lesser of pullout capacity in sheet closest to screw tip, or pullover capacity for sheet closest to the screw head (based on head diameter shown)
6. Tension values shown in this table, pullover values have been reduced by 50% assuming eccentrically loaded connections producing a non-uniform pullover force on the fastener.
7. Values are for pure shear or tension loads. See AISI section E4.5 for combined shear and pull-over.
8. Higher values, especially for screw strength, may be obtained by specifying screws from a specific manufacturer. See manufacturer's data for specific values and installation instructions.
9. Shear and tension data for screws was developed with the assistance of the Wei-Wen Yu Center for Cold-Formed Steel Structures (CCFSS), using manufacturers' data and evaluation reports available at the time of publication.

ALLOWABLE WELD CAPACITY - 2007 NASPEC WITH 2010 SUPPLEMENT (AISI S100-7/2-10)

Thickness (mils)	Design Thickness (in)	Fy (ksi)	Fu (ksi)	Nominal Weld Size	Fillet Welds7		Fxx Limit	Flare Groove Welds7		Fxx Limit
					Longitudinal1	Transverse	(E60xx)3	Longitudinal2	Transverse	(E60xx)4
43	0.0451	33	45	1/16	499	864	NA	544	663	NA
54	0.0566	33	45	3/32	626	1084	NA	682	832	NA
68	0.0713	33	45	1/8	789	1365	NA	859	1048	NA
97	0.1017	33	45	1/8	1125	1269	1269	1226	1402	1402
118	0.1242	33	45	1/8	1374	1550	1550	1497	1712	1712
54	0.0566	50	65	3/32	905	1566	NA	985	1202	NA
68	0.0713	50	65	1/8	1140	1972	NA	1241	1514	NA
97	0.1017	50	65	1/8	1269	1269	1269	1402	1402	1402
118	0.1242	40	65	1/8	1550	1550	1550	1712	1712	1712

Weld Table Notes

1. For welds with L/t > 25 where L is weld length and t is the thickness of the welded member.
2. For t <= tw < 2t where t = thickness of welded member and tw is effective throat thickness of weld.
3. Based on weld effective throat, tw = .707t
4. Based on weld effective throat, tw = 5/16R. R= outside corner radius = 2.5t. Verify with AISI Eq. 2.5-5 for particular weld geometry.
5. Weld capacities based on 2007 NASPEC with 2010 Supplement No. 2 (AISI S100-07/2-10), Sections E2.4 and E2.5
6. When connecting materials of different steel thickness or tensile strength (Fu), the lowest applicable values should be used
7. Where highlighted indicates that weld capacity is controlled by electrode tensile strength, Fxx = 60 ksi. Only applies to welds of materials > 0.10" thick.

FASTENING SYSTEMS

ALLOWABLE WORKING VALUES FOR LOW VELOCITY FASTENERS INTO STEEL (POUNDS)

Catalog Number Series	Shank Diameter (inches	Type of Shank	Min. Edge Distance	Min. Spacing	Base Steel Thickness (inches)					
					3/16		1/4		3/8	
					Tension	Shear	Tension	Shear	Tension	Shear
1500, 1600 & 1900 Series Shank Drive Pins	.140	Smooth	1/2	1	130	665	270	700	370	840
Ladd ceiling System Drive Pins	.152	Smooth	3/4	1-1/2	137	NA	133	NA	132	NA
3300 Series Drive Pins	.170	Smooth	5/8	1-1/8	85	820	180	895	330	900
9140K Threaded Stud	.205	Knurled	3/4	1-3/8	NA	NA	480	1565	550	1950

1. Holding values shown are for fastenings that have the entire pointed end of the fastener driven through the steel plate.
2. Holding values shown incorporate a 10 to 1 safety factor for tension and a 5 to 1 safety factor for shear.
   Wood or steel connecting members must be investigated separately.

ALLOWABLE WORKING VALUES FOR LOW VELOCITY FASTENERS INTO STONE AGGREGATE CONCRETE (POUNDS)

Catalog Number Serie	Shank Diameter (inches	Penetration	Min. Edge Distance	Min. Spacing	Concrete Compressive Strength (psi)					
					2000		3000		4000	
					Tension	Shear	Tension	Shear	Tension	Shear
1506SM 1508SM Step Shank Drive Pin	.130	3/4 1 1-1/4	3 3 3	3 3 3	55* 112 200	60* 87 118	49** 87** 134**	45** 99** 152**	44* 62 68	30* 112 187
1500, 1600 & 1900 Series Straight Shank Drive Pins	.140	3/4 1 1-1/4 1-1/2	3 3 3 3	3 3 3 3	45* 110 130 187	80* 165 190 200	70* 175 180 227**	115* 185 215 223**	90* 235 230 268	145* 205 240 247
1524, 1524SD Drive Pins	.152	1 1-1/4	3 3	3 3	105 115	150 170	150 162	215 225	197 220	262 280
3300 Series Drive Pins	.170	1-1/4 1-1/2	3 3	4 4	165 220	225 330	185 225	225 315	210 225	280 300
9100 Series Threaded Studs	.205	13/16 1-1/16 1-1/4 1-1/2	3 3 3 3	5 5 5 5	80 115 165 300	125 265 315 375	90 150 230 310	145 250 330 420	105 190 295 320	170 230 350 460
9100 Series Threaded Studs	.140	1-1/8	3	NA	-	-	96	180	98	193

1. Except as noted, values shown reflect an 8 to 1 safety factor
2. Values shown are for concrete at the designated strength and are for the fastener or clip system only.
   Wood, Steel, etc. connected members must be investigated separately.
3. Cyclic, fatigue or shock loads and other design criteria may require a different safety factor.
4. Job-site testing may be required to determine actual job-site values.

* 10 to 1 safety factor used due to shallow embedment.

** Interpolated values.

Values are suggested only. In structural or load bearing applications, always consult a professional design engineer for proper use of fasteners

ACCESSORIES

(CLT) Custom Leg Track

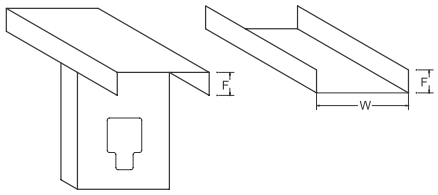

Product Data:
- Designation: CLT or VST Width x Gauge
- Widths: Multiple Sizes and Gauges available.
- Gauge: Multiple Sizes available.
- Lengths: Standard 10'

Uses:
- CLT used for standard stick built construction with channel or bracing attached within 2' of track member to each stud.
- For attachment at top of infill curtain wall systems to primary frame; allows for one half inch of live load deflection or settlement of the primary frame without transferring the load to the exterior wall while bracing the wall against lateral forces.
- Variable width and height for track-in-track applications such as panel construction

(FS) Flat Strapping

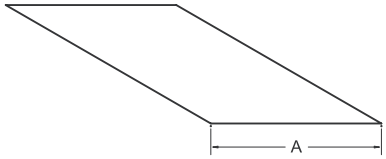

Product Data:
- Designation: Width-FS- Gauge.
  - o Ex 2" FS- 20Ga
- Stock widths: 2", 4", 6"
- Custom Widths are available in increments of even inches.
  - o Examples:1.5, 2, 3, 4, 5, 6, 7, 8, 9, 10, 11, 12, 13, 14 15, 16, 17, 18, 19, 20, 21, 22, 23, 24, 25, 26, 27, 28, 29, 30, 31, 32, 33, 34, 35, 36, 37, 38, 39, 40, 41,42, 43, 44, 45, 46, 47, 48"
- Length: 10' Standard (Alt. Lengths Available, ie. 8')
- Gauges:
  - o 33KSI: 25, 22, 20, 20S& 18 gauge.
  - o 50KSI: 20S, 22, 16, 14 &12 gauge.
- Coating:
  - o Drywall: Standard G-40 Hot Dipped Galvanized. Also Available in G-60 and G-90.
  - o Structural: G-60 Hot Dipped Galvanized. Also Available in G-60 and G-90
- Meets applicable ASTM's for Structural and Drywall applications:
  - o ASTM- A1003, A-653, A924, C-645, C754, C955, C1007

Uses

Provides tension force resistance in shear wall assemblies.

- Backing plates for fixtures, railings and where ever additional pullout strength is required.

- Resists racking of prefabricated wall assemblies while handling, transporting, and erecting.

(WS) Web Stiffeners

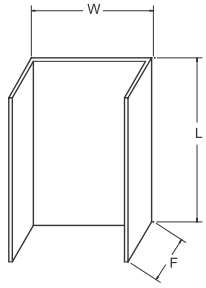

Product Data:
- Designation: WS W x F x gauge.
- Length: 4, 6, 7-1/4, 8, 9-1/4, 10, 12 inch.
- Galvanized finish.
- For axial capacities contact Telling Industries Engineering

Uses:
- For web reinforcement of C shaped framing members
- Allow transfer of axial loads through joists at bearing conditions of platform frames.

(BC) Bridge Clip

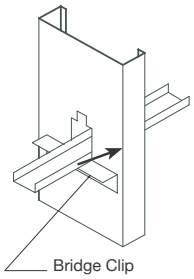

Product Data:
- Designation: BC Length x Gauge
- Leg Dimensions: F-1-1/2", W-1-1/2"
- Standard Gauge: 16 ga. galvanized steel.
- Standard Length: L-2-1/2", 3-3/8" and 5-1/4"

Uses:
- For alternate screw attachement of CRC bridging to stud webs in place of direct weld.

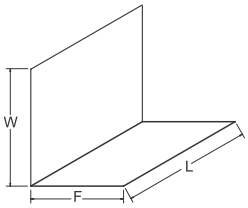

Note: 4 Screws min.

ACCESSORIES

(RA) Rolled Angles

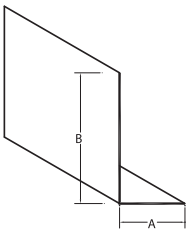

Product Data:
- Available in most sizes, lengths, and gauges.

Uses:
- For 90 degree corner enclosures at lapped framing location; provides in-plane stability of framework.

(AxB) Product	Gauges	Length
7/8" x 1-3/8"	25, 22, 20, 18	10'
1-5/8" x 1-5/8"	25, 22, 20, 18, 16	10'
2" x 2"	25, 22, 20, 18, 16, 14	10'
3" x 3"	20, 18, 16, 14, 12	10'
2" x 4"	20, 18, 16, 14,12	10'
3" x 6"	20, 18, 16, 14,12	10'

(CA) Clip Angles

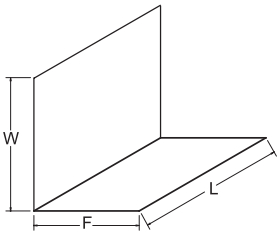

Product Data:
- Designation: SA Length (L) x gauge.
- Designed for 3-5/8, 4, 6, 7-1/4, 8, 9-1/4, 10 and 12 inch studs.
- Gauges: 18 ga (3-5/8, 4, or 6 inch only), 14 ga (all lengths), 12 ga (6, 7-1/4, 8, 9-1/4, 10 and 12 inch only)
- W and F dimensions per request. Standard 2" x 2"

Uses:
- For miscellaneous attachments of intersecting framing components.
- For attachment of joist framing components to flush mounted headers.
- For attachment of solid blocking sections to adjacent studs of joists.
- For alternate screw attachment of CRC briding to stud webs in lieu direct weld

ACCESSORIES

(DWFC) Drywall Furring Channel

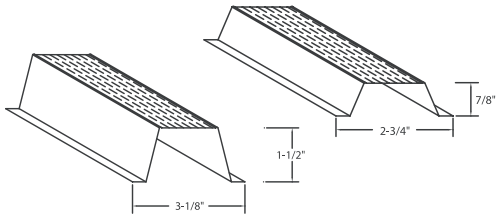

Product Data:
- Available in 7/8" and 1-1/2" sizes.
- Gauge: Standard 25 through 16 gauges.
- Lengths: 12' 0" Stock Length, (other lengths available).
- Consult Telling Industries' Light Gage Structural Framing & Accessories brochure for structural properties and span tables

Uses:
- Convenient accessory components for use in furring out ceilings and masonry walls. Knurled face prevents screw "ride" when attaching gypsum wallboard.
- 1-1/2" DWFC is economical with respect to furring walls with electrical boxes, (no need to set into concrete).

Physical/Structural Properties for Drywall Furring Channels (DWFC)

				Gross Properties					Effective Properties		
Section	Fy (ksi)	Design Thickness (in)	Area (in2)	Weight (lb/ft)	Ix (in4)	Rx (in)	Iy (in4)	Ry (in)	Ix (in4)	Sx (in3)	Ma (Ft-lb)
DWFC088-18	33	0.0188	0.070	0.239	0.009	0.356	0.035	0.710	0.009	0.016	26.4
DWFC088-30	33	0.0312	0.115	0.391	0.014	0.353	0.058	0.710	0.014	0.031	50.5
DWFC088-43	33	0.0451	0.162	0.550	0.020	0.348	0.082	0.711	0.020	0.042	69.2
DWFC088-54	50	0.0566	0.197	0.669	0.023	0.345	0.099	0.711	0.023	0.050	124.9
DWFC150-18	33	0.0188	0.094	0.320	0.031	0.575	0.047	0.705	0.030	0.034	56.6
DWFC150-30	33	0.0312	0.154	0.525	0.050	0.571	0.077	0.705	0.050	0.064	105.3
DWFC150-43	33	0.0451	0.219	0.745	0.070	0.565	0.109	0.705	0.070	0.089	146.3
DWFC150-54	50	0.0566	0.269	0.914	0.084	0.561	0.134	0.705	0.084	0.107	267.2

Notes:
1. Properties based on the 2007 NASPEC
2. Design thickness used for determination of properties. Minimum delivered thickness must be no less than 95% of design thickness.
3. For deflection calculations, use effective Ixx. Effective Ixx is based on Procedure 1 of the NASPEC
4. Effective properties are given as the minimum value for positive or negative bending.

Drywall Furring Channel (DWFC) Allowable Ceiling Spans - L/240

			Uniform Load								
			4 psf			6 psf			13 psf		
	Fy		Spacing (in) oc			Spacing (in) oc			Spacing (in) oc		
Section	(ksi)	Spans	12	16	24	12	16	24	12	16	24
DWFC088-18	33	Single	5'-2"	4'-9"	4'-1"	4'-6"	4'-1"	3'-7"	3'-6"	3'-2"	2'-9"
		Multiple	6'-5"	5'-10"	5'-1"	5'-7"	5'-1"	4'-2"	4'-0"	3'-6"	2'-9"
DWFC088-30	33	Single	6'-2"	5'-7"	4'-11"	5'-5"	4'-11"	4'-3"	4'-2"	3'-9"	3'-4"
		Multiple	7'-7"	6'-11"	6'-1"	6'-8"	6'-1"	5'-3"	5'-2"	4'-8"	3'-11"
DWFC088-43	33	Single	6'-10"	6'-3"	5'-5"	6'- 0"	5'-5"	4'-9"	4'-7"	4'-2"	3'-8"
		Multiple	8'-6"	7'-8"	6'-9"	7'-5"	6'-9"	5'-10"	5'-9"	5'-2"	4'-6"
DWFC088-54	50	Single	7'-3"	6'-7"	5'-9"	6'-4"	5'-9"	5'-0"	4'-11"	4'-5"	3'-11"
		Multiple	9'- 0"	8'-2"	7'-2"	7'-10"	7'-2"	6'-3"	6'-1"	5'-6"	4'-10"
DWFC150-18	33	Single	7'-11"	7'-2"	6'-3"	6'-11"	6'-3"	5'-6"	5'-4"	4'-10"	4'-2"
		Multiple	9'-9"	8'-10"	7'-5"	8'-6"	7'-5"	5'-11"	5'-7"	4'-9"	3'-8"
DWFC150-30	33	Single	9'-5"	8'-6"	7'-5"	8'-2"	7'-5"	6'-6"	6'-4"	5'-9"	5'-0"
		Multiple	11'-7"	10'-6"	9'-2"	10'-2"	9'-2"	8'-0"	7'-10"	7'- 0"	5'-8"
DWFC150-43	33	Single	10'-6"	9'-6"	8'-4"	9'-2"	8'-4"	7'-3"	7'-1"	6'-5"	5'-7"
		Multiple	12'-11"	11'-9"	10'-3"	11'-4"	10'-3"	9'- 0"	8'-9"	7'-11"	6'-8"
DWFC150-54	50	Single	11'-2"	10'-1"	8'-10"	9'-9"	8'-10"	7'-9"	7'-6"	6'-10"	6'- 0"
			13'-9"	12'-6"	10'-11"	12'-0"	10'-11"	9'-7"	9'-4"	8'-5"	7'-5"

Drywall Furring Channel (DWFC) Allowable Ceiling Spans - L/360

			Uniform Load								
			4 psf			6 psf			13 psf		
	Fy		Spacing (in) oc			Spacing (in) oc			Spacing (in) oc		
Section	(ksi)	Spans	12	16	24	12	16	24	12	16	24
DFWC088-18	33	Single	4'-6"	4'-1"	3'-7"	4'- 0"	3'-7"	3'-2"	3'-1"	2'-9"	2'-5"
		Multiple	5'-7"	5'-1"	4'-5"	4'-11"	4'-5"	3'-11"	3'-9"	3'-5"	2'-9"
DWFC088-30	33	Single	5'-5"	4'-11"	4'-3"	4'-8"	4'-3"	3'-9"	3'-8"	3'-4"	2'-11"
		Multiple	6'-8"	6'-1"	5'-3"	5'-10"	5'-3"	4'-7"	4'-6"	4'-1"	3'-7"
DWFC088-43	33	Single	6'- 0"	5'-5"	4'-9"	5'-3"	4'-9"	4'-2"	4'-0"	3'-8"	3'-2"
		Multiple	7'-5"	6'-9"	5'-10"	6'-6"	5'-10"	5'-2"	5'- 0"	4'-6"	4'- 0"
DWFC088-54	50	Single	6'-4"	5'-9"	5'-0"	5'-7"	5'-0"	4'-5"	4'-3"	3'-11"	3'-5"
		Multiple	7'-10"	7'-2"	6'-3"	6'-10"	6'-3"	5'-5"	5'-4"	4'-10"	4'-2"
DWFC150-18	33	Single	6'-11"	6'-3"	5'-6"	6'-0"	5'-6"	4'-9"	4'-8"	4'-3"	3'-8"
		Multiple	8'-6"	7'-9"	6'-9"	7'-5"	6'-9"	5'-11"	5'-7"	4'-9"	3'-8"
DWFC150-30	33	Single	8'-2"	7'-5"	6'-6"	7'-2"	6'-6"	5'-8"	5'-6"	5'-0"	4'-5"
		Multiple	10'-2"	9'-2"	8'-0"	8'-10"	8'-0"	7'-0"	6'-10"	6'-3"	5'-5"
DFWC150-43	33	Single	9'-2"	8'-4"	7'-3"	8'- 0"	7'-3"	6'-4"	6'-2"	5'-7"	4'-11"
		Multiple	11'-4"	10'-3"	9'- 0"	9'-11"	9'- 0"	7'-10"	7'-8"	6'-11"	6'-1"
DFWC150-54	50	Single	9'-9"	8'-10"	7'-9"	8'-6"	7'-9"	6'-9"	6'-7"	6'- 0"	5'-3"
			12'-0"	10'-11"	9'-7"	10'-6"	9'-7"	8'-4"	8'-2"	7'-5"	6'-5"

Notes:
1. Single spans taken as the minimum span based on moment, shear, web crippling or deflection
2. Multiple spans indicate two or more equal, continuous spans with span length measured support to support.
3. Multiple spans taken as the minimum span based on moment, shear, web crippling, deflection combined bending and shear or combined and web crippling
4. Web crippling values based on 1" bearing at end and interior supports.

ARCHITECTURAL SPECIFICATION

PART 1.00 - GENERAL

Summary
Section includes axial and wind loaded steel stud exterior wall framing and bridging. The architect has provided engineering of exterior framed wall construction.

References
American Iron and Steel Institute
2007 AISI - North American Specification for the Design of Cold-Formed Steel Structural Members
American Society of Civil Engineers (ASCE)
– Minimum design loads for buildings and other structures.
ASTM International:
ASTM A 653 – Standard Specification for Steel Sheet, Zinc-Coated (Galvanized) or Zinc-Iron Alloy-Coated (Galvannealed) by the Hot-Dip Process.
ASTM C 955 – Standard Specification for Load Bearing (Transverse and Axial) Steel Studs and Track.
ASTM A1003 - Standard Specification for Steel Sheet, Carbon, Metallic-and Nonmetallic-Coated for Cold-Formed Framing Members

Design Requirements
Exterior framed wall engineering provided by Architect.

Submittals
Section 01330 – Submittal Procedures:

Submittal requirements
All material is to be supplied by Telling Industries, LLC.
Product Data: All submittal data can be accessed on Telling Industries, LLC. Website, www.tellingindustries.com

Quality Insurance
Qualifications
Installer: Company performing work to have a minimum of three years experience and approved by Telling Industries, LLC.

Sequencing and Scheduling
Deliver materials to allow for minimum storage time at project site.
Coordinate delivery with scheduled time of installation.

PART 2.00 - PRODUCTS

2.01 Manufacturers
A. All material to be supplied by Telling Industries, LLC.

2.03 Accessories
A. All accessories to be supplied by Telling Industries, LLC.

2.04 Finishes
A. Cold-Formed framing: Galvanized to a G60 coating class or equivalent.

PART 3.00 - EXECUTION

3.01 Examination
A. Verify substrate surfaces and primary building framing components are ready to receive work.

B. It is the erecting contractor's responsibility to ensure that bearing criteria is met by work set by another trade.

C. Verify rough – in utilities are in proper location.

3.02 Erection (Non load – bearing)
A. Align floor and ceiling tracks; locate to layout and securely anchor to the supporting structure.

B. Jack studs shall be installed below window sills, above door and window headers and elsewhere as required to provide support.

C. Lateral bracing shall be provided by the use of wall sheathing and or cold rolled channel or strapping.

D. Provisions for vertical movement of supporting structure shall be provided where indicated by architect.

3.03 Erection (Axially – loaded walls)
A. Track should be securely anchored to supporting structure.

B. Complete, uniform and level bearing shall be provided for the bottom runner.

C. Framing of openings shall include headers and support studs as required and as shown on contract and shop drawings.

D. Diagonally braced walls shall be installed as "shear walls" where indicated for lateral load resistance and framing stability.

E. Temporary bracing of walls shall be provided until erection is complete.

F. Provisions for vertical movement of supporting structure shall be provided where indicated by architect.

3.04 Inspection
A. Inspection shall be provided to assure strict conformance to shop drawings at all phases of construction.

B. All members shall be checked for proper alignment, bearing, completeness of attachments, reinforcement, etc.

C. General inspection of structure shall be completed prior to applying loads to these members.

D. Inspections where and as required by local codes shall be controlled inspections.

NOTES

NOTES

TELLING®

BUILDSTRONG™

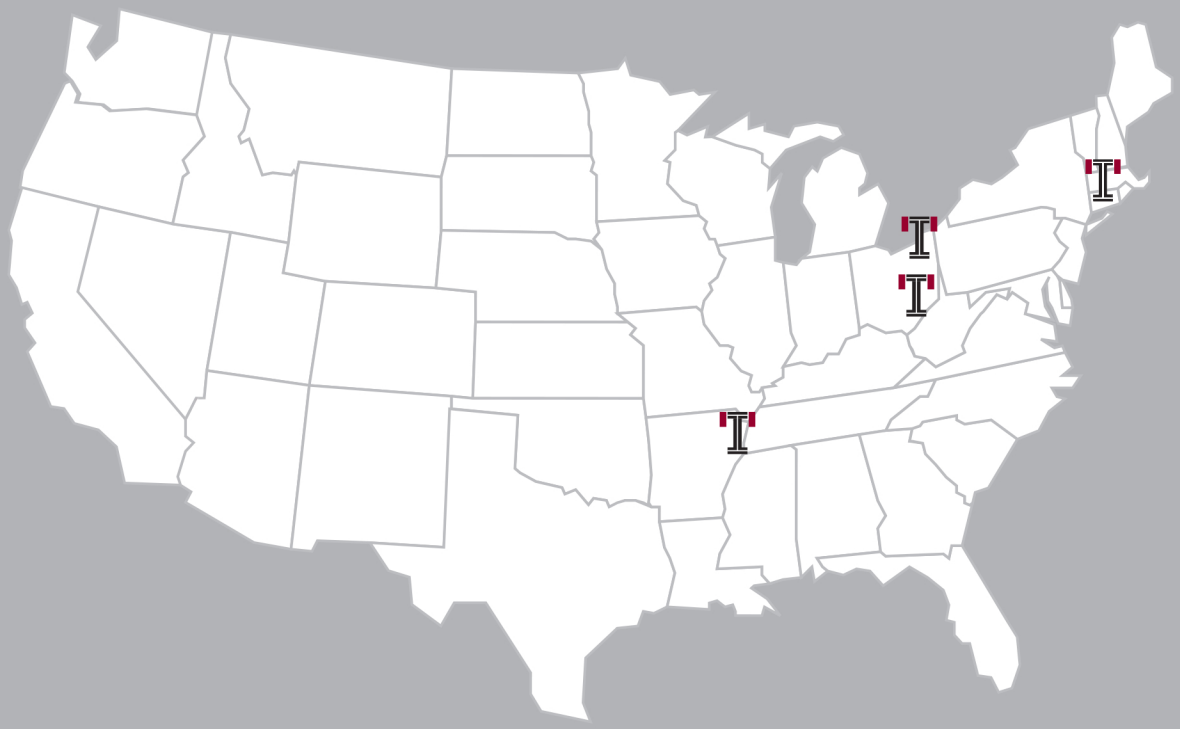

Telling® Industries
Corporate Headquarters
4420 Sherwin Road
Willoughby, OH 44094
Phone: 440-974-3370
Toll Free: 866-FRAME-TI(372-6384)
Fax: 440-974-3408
E-mail: sales.corp@tellingindustries.com

Telling® Industries
Midwest Facility
2105 Larrick Road
Cambridge, OH 43725
Phone: 740-435-8900
Toll Free: 866-35STUDS (357-8837)
Fax: 740-435-8915
E-mail: sales.oh@tellingindustries.com

Telling® Industries
Midsouth Facility
1400 Southwire Drive
Osceola, AR 72370
Phone: 870-563-6065
Toll Free: 888-711-3124
Fax: 870-563-2471
E-mail: sales.ar@tellingindustries.com

Telling® Industries
Northeast Facility
1050 Kennedy Road
Windsor, CT 06095
Toll Free: 866-372-6384
Fax: 440-974-3408
E-mail: sales.corp@tellingindustries.com

For more information, please contact Telling® Industries at 1-866-372-6384

This technical information reflects the most current information available and supersedes any and all previous publications effective January 1, 2016.

www.BUILDSTRONG.com